This is a digital copy of a book that was preserved for generations on library shelves before it was carefully scanned by Google as part of a project to make the world's books discoverable online.

It has survived long enough for the copyright to expire and the book to enter the public domain. A public domain book is one that was never subject to copyright or whose legal copyright term has expired. Whether a book is in the public domain may vary country to country. Public domain books are our gateways to the past, representing a wealth of history, culture and knowledge that's often difficult to discover.

Marks, notations and other marginalia present in the original volume will appear in this file - a reminder of this book's long journey from the publisher to a library and finally to you.

Usage guidelines

Google is proud to partner with libraries to digitize public domain materials and make them widely accessible. Public domain books belong to the public and we are merely their custodians. Nevertheless, this work is expensive, so in order to keep providing this resource, we have taken steps to prevent abuse by commercial parties, including placing technical restrictions on automated querying.

We also ask that you:

+ *Make non-commercial use of the files* We designed Google Book Search for use by individuals, and we request that you use these files for personal, non-commercial purposes.
+ *Refrain from automated querying* Do not send automated queries of any sort to Google's system: If you are conducting research on machine translation, optical character recognition or other areas where access to a large amount of text is helpful, please contact us. We encourage the use of public domain materials for these purposes and may be able to help.
+ *Maintain attribution* The Google "watermark" you see on each file is essential for informing people about this project and helping them find additional materials through Google Book Search. Please do not remove it.
+ *Keep it legal* Whatever your use, remember that you are responsible for ensuring that what you are doing is legal. Do not assume that just because we believe a book is in the public domain for users in the United States, that the work is also in the public domain for users in other countries. Whether a book is still in copyright varies from country to country, and we can't offer guidance on whether any specific use of any specific book is allowed. Please do not assume that a book's appearance in Google Book Search means it can be used in any manner anywhere in the world. Copyright infringement liability can be quite severe.

About Google Book Search

Google's mission is to organize the world's information and to make it universally accessible and useful. Google Book Search helps readers discover the world's books while helping authors and publishers reach new audiences. You can search through the full text of this book on the web at `http://books.google.com/`

Digitized by Google

HARVARD LAW LIBRARY

Received FEB 12 1919

Digitized by Google

Digitized by Google

Digitized by Google

Digitized by Google

Digitized by Google

Digitized by Google

This is a Key-Numbered Volume

Each syllabus paragraph in this volume is marked with the topic and Key-Number section ⟹ under which the point will eventually appear in the American Digest System.

The lawyer is thus led from that syllabus to the exact place in the Digests where we, as digest makers, have placed the other cases on the same point—*This is the Key-Number Annotation.*

Digitized by Google

UNITED STATES
CIRCUIT COURTS OF APPEALS
REPORTS

WITH KEY-NUMBER ANNOTATIONS

WITH TABLE OF CASES IN THE UNITED STATES CIRCUIT COURTS OF APPEALS
WHICH HAVE BEEN PASSED UPON BY THE SUPREME
COURT OF THE UNITED STATES

VOLUME 161

ST. PAUL
WEST PUBLISHING CO.
1919

Digitized by Google

COPYRIGHT, 1919
BY
WEST PUBLISHING COMPANY

(161 C.C.A.)

FEB 12 1919

Digitized by Google

JUDGES

OF THE

UNITED STATES CIRCUIT COURTS OF APPEALS AND THE DISTRICT COURTS

FIRST CIRCUIT

Hon. OLIVER WENDELL HOLMES, Circuit Justice.....Washington, D. C.
Hon. FREDERIC DODGE, Circuit Judge[1].....Boston, Mass.
Hon. GEO. H. BINGHAM, Circuit Judge.....Manchester, N. H.
Hon. CHAS. F. JOHNSON, Circuit Judge.....Portland, Me.
Hon. CLARENCE HALE, District Judge, Maine.....Portland, Me.
Hon. JAS. M. MORTON, Jr., District Judge, Massachusetts.....Boston, Mass.
Hon. EDGAR ALDRICH, District Judge, New Hampshire.....Littleton, N. H.
Hon. ARTHUR L. BROWN, District Judge, Rhode Island.....Providence, R. I.

SECOND CIRCUIT

Hon. LOUIS D. BRANDEIS, Circuit Justice.....Washington, D. C.
Hon. HENRY G. WARD, Circuit Judge.....New York, N. Y.
Hon. HENRY WADE ROGERS, Circuit Judge.....New Haven, Conn.
Hon. CHARLES M. HOUGH, Circuit Judge.....New York, N. Y.
Hon. MARTIN T. MANTON, Circuit Judge.....New York, N. Y.
Hon. EDWIN S. THOMAS, District Judge, Connecticut.....New Haven, Conn.
Hon. THOMAS I. CHATFIELD, District Judge, E. D. New York.....Brooklyn, N. Y.
Hon. EDWIN LOUIS GARVIN, District Judge, E. D. New York.....Brooklyn, N. Y.
Hon. GEORGE W. RAY, District Judge, N. D. New York.....Norwich, N. Y.
Hon. LEARNED HAND, District Judge, S. D. New York.....New York, N. Y.
Hon. JULIUS M. MAYER, District Judge, S. D. New York.....New York, N. Y.
Hon. AUGUSTUS N. HAND, District Judge, S. D. New York.....New York, N. Y.
Hon. JOHN CLARK KNOX, District Judge, S. D. New York.....New York, N. Y.
Hon. JOHN R. HAZEL, District Judge, W. D. New York.....Buffalo, N. Y.
Hon. HARLAND B. HOWE, District Judge, Vermont.....St. Johnsbury, Vt.

THIRD CIRCUIT

Hon. MAHLON PITNEY, Circuit Justice.....Washington, D. C.
Hon. JOSEPH BUFFINGTON, Circuit Judge.....Pittsburgh, Pa.
Hon. JOHN B. McPHERSON, Circuit Judge.....Philadelphia, Pa.
Hon. VICTOR B. WOOLLEY, Circuit Judge.....Wilmington, Del.
Hon. EDWARD G. BRADFORD, District Judge, Delaware[2].....Wilmington, Del.
Hon. JOHN RELLSTAB, District Judge, New Jersey.....Trenton, N. J.
Hon. THOS. G. HAIGHT, District Judge, New Jersey.....Jersey City, N. J.
Hon. J. WARREN DAVIS, District Judge, New Jersey.....Trenton, N. J.
Hon. J. WHITAKER THOMPSON, District Judge, E. D. Pennsylvania...Philadelphia, Pa.
Hon. OLIVER B. DICKINSON, District Judge, E. D. Pennsylvania.....Philadelphia, Pa.
Hon. CHAS. B. WITMER, District Judge, M. D. Pennsylvania.....Sunbury, Pa.
Hon. CHARLES P. ORR, District Judge, W. D. Pennsylvania.....Pittsburgh, Pa.
Hon. W. H. SEWARD THOMSON, District Judge, W. D. Pennsylvania.....Pittsburgh, Pa.

[1] Resigned July 1, 1918. [2] Resigned May 20, 1918.

Digitized by Google

FOURTH CIRCUIT

Hon. EDWARD D. WHITE, Circuit Justice.....Washington, D. C.
Hon. JETER C. PRITCHARD, Circuit Judge.....Asheville, N. C.
Hon. MARTIN A. KNAPP, Circuit Judge.....Washington, D. C.
Hon. CHAS. A. WOODS, Circuit Judge.....Marion, S. C.
Hon. JOHN C. ROSE, District Judge, Maryland.....Baltimore, Md.
Hon. HENRY G. CONNOR, District Judge, E. D. North Carolina.....Wilson, N. C.
Hon. JAMES E. BOYD, District Judge, W. D. North Carolina.....Greensboro, N. C.
Hon. HENRY A. MIDDLETON SMITH, District Judge, E. D. S. C.....Charleston, S. C.
Hon. JOSEPH T. JOHNSON, District Judge, W. D. S. C. .....Greenville, S. C.
Hon. EDMUND WADDILL, Jr., District Judge, E. D. Virginia.....Richmond, Va.
Hon. HENRY CLAY McDOWELL, District Judge, W. D. Virginia.....Lynchburg, Va.
Hon. ALSTON G. DAYTON, District Judge, N. D. West Virginia.....Philippi, W. Va.
Hon. BENJAMIN F. KELLER, District Judge, S. D. West Virginia....Charleston, W. Va.

FIFTH CIRCUIT

Hon. JAMES CLARK McREYNOLDS, Circuit Justice .....Washington, D. C.
Hon. DON A. PARDEE, Circuit Judge.....Atlanta, Ga.
Hon. RICHARD W. WALKER, Circuit Judge.....Huntsville, Ala.
Hon. ROBERT LYNN BATTS, Circuit Judge .....Austin, Tex.
Hon. HENRY D. CLAYTON, District Judge, N. and M. D. Alabama....Montgomery, Ala.
Hon. WM. I. GRUBB, District Judge, N. D. Alabama.....Birmingham, Ala.
Hon. ROBERT T. ERVIN, District Judge, S. D. Alabama .....Mobile, Ala.
Hon. WM. B. SHEPPARD, District Judge, N. D. Florida.....Pensacola, Fla.
Hon. RHYDON M. CALL, District Judge, S. D. Florida.....Jacksonville, Fla.
Hon. WILLIAM T. NEWMAN, District Judge, N. D. Georgia.....Atlanta, Ga.
Hon. EMORY SPEER, District Judge, S. D. Georgia.....Macon, Ga.
Hon. BEVERLY D. EVANS, District Judge, S. D. Georgia .....Savannah, Ga.
Hon. RUFUS E. FOSTER, District Judge, E. D. Louisiana.....New Orleans, La.
Hon. GEORGE W. JACK, District Judge, W. D. Louisiana .....Shreveport, La.
Hon. HENRY C. NILES, District Judge, N. and S. D. Mississippi.....Kosciusko, Miss.
Hon. GORDON RUSSELL, District Judge, E. D. Texas.....Sherman, Tex.
Hon. EDWARD R. MEEK, District Judge, N. D. Texas.....Dallas, Tex.
Hon. DUVAL WEST, District Judge, W. D. Texas .....San Antonio, Tex.
Hon. JOSEPH C. HUTCHESON, Jr., District Judge, S. D. Texas .....Houston, Tex.
Hon. W. R. SMITH, District Judge, W. D. Texas.... .....El Paso, Tex.

SIXTH CIRCUIT

Hon. WILLIAM R. DAY, Circuit Justice.....Washington, D. C.
Hon. JOHN W. WARRINGTON, Circuit Judge.....Cincinnati, Ohio.
Hon. LOYAL E. KNAPPEN, Circuit Judge.....Grand Rapids, Mich.
Hon. ARTHUR C. DENISON, Circuit Judge.....Grand Rapids, Mich.
Hon. ANDREW M. J. COCHRAN, District Judge, E. D. Kentucky.....Maysville, Ky.
Hon. WALTER EVANS, District Judge, W. D. Kentucky.....Louisville, Ky.
Hon. ARTHUR J. TUTTLE, District Judge, E. D. Michigan.....Detroit, Mich.
Hon. CLARENCE W. SESSIONS, District Judge, W. D. Michigan.....Grand Rapids, Mich.
Hon. JOHN M. KILLITS, District Judge, N. D. Ohio.....Toledo, Ohio.
Hon. D. C. WESTENHAVER, District Judge, N. D. Ohio .....Cleveland, Ohio.
Hon. JOHN E. SATER, District Judge, S. D. Ohio.....Columbus, Ohio.
Hon. HOWARD C. HOLLISTER, District Judge, S. D. Ohio.....Cincinnati, Ohio.
Hon. EDWARD T. SANFORD, District Judge, E. and M. D. Tennessee..Knoxville, Tenn.
Hon. JOHN E. McCALL, District Judge, W. D. Tennessee.....Memphis, Tenn.

SEVENTH CIRCUIT

Hon. JOHN H. CLARKE, Circuit Justice ....Washington, D. C.
Hon. FRANCIS E. BAKER, Circuit Judge.....Goshen, Ind.
Hon. CHRISTIAN C. KOHLSAAT, Circuit Judge[3].....Chicago, Ill.
Hon. JULIAN W. MACK, Circuit Judge.....Chicago, Ill.

[3] Died May 11, 1918.

Digitized by Google

Hon. SAMUEL ALSCHULER, Circuit Judge ..... Chicago, Ill.
Hon. EVAN A. EVANS, Circuit Judge ..... Baraboo, Wis.
Hon. KENESAW M. LANDIS, District Judge, N. D. Illinois..... Chicago, Ill.
Hon. GEORGE A. CARPENTER, District Judge, N. D. Illinois..... Chicago, Ill.
Hon. J. OTIS HUMPHREY, District Judge, S. D. Illinois[4]..... Springfield, Ill.
Hon. LOUIS FITZ HENRY, District Judge, S. D. Illinois[5]..... Bloomington, Ill.
Hon. GEO. W. ENGLISH, District Judge, E. D. Illinois[6] ..... Danville, Ill.
Hon. ALBERT B. ANDERSON, District Judge, Indiana..... Indianapolis, Ind.
Hon. FERDINAND A. GEIGER, District Judge, E. D. Wisconsin..... Milwaukee, Wis.
Hon. ARTHUR L. SANBORN, District Judge, W. D. Wisconsin..... Madison, Wis.

EIGHTH CIRCUIT

Hon. WILLIS VAN DEVANTER, Circuit Justice..... Washington, D. C.
Hon. WALTER H. SANBORN, Circuit Judge..... St. Paul, Minn.
Hon. WILLIAM C. HOOK, Circuit Judge..... Leavenworth, Kan.
Hon. WALTER I. SMITH, Circuit Judge..... Council Bluffs, Iowa.
Hon. JOHN E. CARLAND, Circuit Judge..... Washington, D. C.
Hon. KIMBROUGH STONE, Circuit Judge ..... Kansas City, Mo.
Hon. JACOB TRIEBER, District Judge, E. D. Arkansas..... Little Rock, Ark.
Hon. F. A. YOUMANS, District Judge, W. D. Arkansas..... Ft. Smith, Ark.
Hon. ROBERT E. LEWIS, District Judge, Colorado..... Denver, Colo.
Hon. HENRY T. REED, District Judge, N. D. Iowa..... Cresco, Iowa.
Hon. MARTIN J. WADE, District Judge, S. D. Iowa..... Iowa City, Iowa.
Hon. JOHN C. POLLOCK, District Judge, Kansas..... Kansas City, Kan.
Hon. PAGE MORRIS, District Judge, Minnesota..... Duluth, Minn.
Hon. WILBUR F. BOOTH, District Judge, Minnesota..... Minneapolis, Minn.
Hon. DAVID P. DYER, District Judge, E. D. Missouri..... St. Louis, Mo.
Hon. ARBA S. VAN VALKENBURGH, District Judge, W. D. Missouri... Kansas City, Mo.
Hon. THOMAS C. MUNGER, District Judge, Nebraska..... Lincoln, Neb.
Hon. JOSEPH W. WOODROUGH, District Judge, Nebraska ..... Omaha, Neb.
Hon. COLIN NEBLETT, District Judge, New Mexico ..... Santa Fé, N. M.
Hon. CHARLES F. AMIDON, District Judge, North Dakota..... Fargo, N. D.
Hon. RALPH E. CAMPBELL, District Judge, E. D. Oklahoma[7]..... Muskogee, Okl.
Hon. JOHN H. COTTERAL, District Judge, W. D. Oklahoma..... Guthrie, Okl.
Hon. JAMES D. ELLIOTT, District Judge, South Dakota..... Sioux Falls, S. D.
Hon. TILLMAN D. JOHNSON, District Judge, Utah ..... Ogden, Utah.
Hon. JOHN A. RINER, District Judge, Wyoming..... Cheyenne, Wyo.

NINTH CIRCUIT

Hon. JOSEPH McKENNA, Circuit Justice..... Washington, D. C.
Hon. WILLIAM B. GILBERT, Circuit Judge..... Portland, Or.
Hon. ERSKINE M. ROSS, Circuit Judge..... Los Angeles, Cal.
Hon. WM. W. MORROW, Circuit Judge..... San Francisco, Cal.
Hon. WM. H. HUNT, Circuit Judge..... Washington, D. C.
Hon. WM. H. SAWTELLE, District Judge, Arizona..... Tucson, Ariz.
Hon. BENJ. F. BLEDSOE, District Judge, S. D. California..... Los Angeles, Cal.
Hon. OSCAR A. TRIPPET, District Judge, S. D. California..... Los Angeles, Cal.
Hon. WM. C. VAN FLEET, District Judge, N. D. California..... San Francisco, Cal.
Hon. MAURICE T. DOOLING, District Judge, N. D. California..... San Francisco, Cal.
Hon. FRANK S. DIETRICH, District Judge, Idaho..... Boise, Idaho.
Hon. GEO. M. BOURQUIN, District Judge, Montana ..... Butte, Mont.
Hon. EDWARD S. FARRINGTON, District Judge, Nevada..... Carson City, Nev.
Hon. CHARLES E. WOLVERTON, District Judge, Oregon..... Portland, Or.
Hon. ROBERT S. BEAN, District Judge, Oregon..... Portland, Or.
Hon. FRANK H. RUDKIN, District Judge, E. D. Washington..... Spokane, Wash.
Hon. EDWARD E. CUSHMAN, District Judge, W. D. Washington..... Seattle, Wash.
Hon. JEREMIAH NETERER, District Judge, W. D. Washington..... Seattle, Wash.

[4] Died June 14, 1918.
[5] Appointed July 6, 1918, to succeed J. Otis Humphrey.
[6] Appointed May 3, 1918.
[7] Resigned August 31, 1918.

*

Digitized by Google

Digitized by Google

CASES REPORTED

Page

Ajax Rail Anchor Co., P. & M. Co. v. (249 F. 215) 251
Alabama Great Southern R. Co. v. Morris & Co. (249 F. 312) 320
Alabama & V. R. Co. v. American Cotton Oil Co. (249 F. 308) 316
Alexander v. Fidelity Trust Co. (249 F. 1) 61
Allen, Chicago & A. R. Co. v. (249 F. 280) 288
American Cotton Oil Co., Alabama & V. R. Co. v. (249 F. 308) 316
American Druggists' Syndicate v. Continental Specialty Co. of Baltimore, Md. (249 F. 290) 298
American Goggle Co. v. Malcom (249 F. 240) 276
American Pipe & Construction Co., Scattergood v. (249 F. 23) 83
American Valve & Motor Co. v. Fairbanks, Morse & Co. (249 F. 234) 270
Atchison, T. & S. F. R. Co. v. Spiller (249 F. 677) 587
Atlantic Coast Line R. Co. v. Selden (249 F. 122) 174
Automatic Pencil Sharpener Co. v. Stewart Mfg. Co. (249 F. 52) 112
Avran, Pennsylvania Co. v. (249 F. 474) 432
A. & H. G. Mutschler, Mayer v. (248 F. 911) 29

Bank of Commerce v. Brown (249 F. 37) 97
Barbarin, King v. (249 F. 303) 311
Baron Napier, The (249 F. 126) 178
Barth Mfg. Co., Hart-Parr Co. v. (249 F. 629) 539
Bartlett & Kling v. Dings (249 F. 322) ... 330
Barton, Odell v. (249 F. 604) 530
Bayley & Sons v. Standart Art Glass Co. (249 F. 478) 436
Bergen Point Iron Works v. Shaw (249 F. 466) 424
Billingsley v. United States (249 F. 331) 339
Bissell Carpet Sweeper Co., Domestic Vacuum Cleaner Co. v. (249 F. 201) 237
Bissell Carpet Sweeper Co., M. S. Wright Co. v. (249 F. 199) 235
Bissell Carpet Sweeper Co., National Sweeper Co. v. (249 F. 196) 232
Block, Wonder Mfg. Co. v. (249 F. 748) .. 658
Bodkin, Edwards v. (249 F. 562) 488
Boisot v. Faller (249 F. 193) 229
Bolin v. Wilkes (249 F. 705) 615
Bone v. Commissioners of Marion County (249 F. 211) 247
Bortz, Petition of (249 F. 319) 327
Bowling, Oklahoma, K. & M. I. R. Co. v. (249 F. 592) 518
Brevard Tannin Co., Krouse v. (249 F. 538) 464

Page

Brooke Glass Co., Schram Glass Mfg. Co. v. (249 F. 228) 264
Brown, Bank of Commerce v. (249 F. 37) 97
Brown, Warten v. (249 F. 48) 108
Burke v. First Nat. Bank of Cape Girardeau, Mo. (249 F. 607) 533
Burke Brick Co. v. First Nat. Bank of Cape Girardeau, Mo. (249 F. 607) 533
Burke Bros. v. First Nat. Bank of Cape Girardeau, Mo. (249 F. 607) 533

Campbell v. Krauss (249 F. 670) 580
Camp Bird v. Howbert (249 F. 27) 87
Canary, Williams v. (249 F. 344) 352
Carey Show Print Co., Farley v. (249 F. 476) 434
Carroll v. City of New York (249 F. 453) 411
Cascade, The (249 F. 718) 628
Central Banking & Security Co., Wagner v. (249 F. 145) 197
Chavkin, In re (249 F. 342) 350
Chicago Great Western R. Co. v. Postal Telegraph-Cable Co. (249 F. 664) 574
Chicago House Wrecking Co., West India S. S. Co. v. (249 F. 338) 346
Chicago & A. R. Co. v. Allen (249 F. 280) 288
Christy, Long v. (249 F. 410) 384
City of Goldfield, Colo., v. Roger (249 F. 39) 99
City of New York v. Carroll (249 F. 453) 411
Clark v. Fairbanks (249 F. 431) 405
Clark Const. Co., Knotts v. (249 F. 181) 217
Clinton v. Smith & Terry (249 F. 119) ... 171
Cloverdale Creamery Co., In re (249 F. 194) 230
Cole, Ralph v. (249 F. 81) 133
Collins Bros. Ice Cream Co. v. Maremont (249 F. 194) 230
Colon, The (249 F. 460) 418
Commissioners of Marion County, Bone v. (249 F. 211) 247
Continental Specialty Co. of Baltimore, Md., American Druggists' Syndicate v. (249 F. 290) 298
Cooper Hewitt Electric Co., General Electric Co. v. (249 F. 61) 121
Cooper Hewitt Electric Co., General Electric Co. v. (249 F. 69) 129
Corrigan, Smith v. (249 F. 273) 281
Couts v. United States (249 F. 595) 521
Cowen Co. v. Houck Mfg. Co. (249 F. 285) 293
Crocker v. Ingersoll Engineering & Constructing Co. (249 F. 31) 91
C. R. Sheffer, The (249 F. 600) 526
Cumberland Telephone & Telegraph Co., Paine v. (249 F. 477) 435

Day, Seegmiller v. (249 F. 177) 213

Digitized by Google

Page

Deere & Webber Bldg. Co., Turner v. (249 F. 752) 662
De Lacey v. United States (249 F. 625) .. 535
Denver & R. G. R. Co., United States v. 249 F. 464) 422
Diamond Patent Co. v. Murray (249 F. 155) 207
Diamond Patent Co. v. Webster Bros. (249 F. 155) 207
Dings, Bartlett & Kling v. (249 F. 322) .. 330
Dittmar, In re (249 F. 606) 532
Dixie, The (249 F. 46) 106
Domestic Vacuum Cleaner Co. v. Bissell Carpet Sweeper Co. (249 F. 201) 237
Dosset v. United States (248 F. 902) 20
Duncan, In re (249 F. 155) 207
Du Pont de Nemours & Co. v. Smith (249 F. 403) 377

Ebner, Smith & Terry v. (249 F. 119) 171
Edmonds v. Stern (248 F. 897) 15
Edwards v. Bodkin (249 F. 562) 488
Edwards v. United States (249 F. 686) 596
E. I. Du Pont de Nemours & Co. v. Smith (249 F. 403) 377
Elaborated Ready Roofing Co., West Coast Roofing & Mfg. Co. v. (249 F. 221) 257

Fairbanks, Clark v. (249 F. 431) 405
Fairbanks, Morse & Co., American Valve & Meter Co. v. (249 F. 234) 270
Faller v. Boisot (249 F. 193) 229
Farley v. Carey Show Print Co. (249 F. 476) 434
Farmers' State Bank v. Freeman (249 F. 579) 505
Fay v. Hill (249 F. 415) 389
F. B. Zieg Mfg. Co. v. Russell Grader Mfg. Co. (249 F. 56) 116
Federal Life Ins. Co., In re (248 F. 908) 26
Feener v. United States (249 F. 425) 399
Fidelity Trust Co. v. Alexander (249 F. 1) 61
First Nat. Bank of Cape Girardeau, Mo., Burke v. (249 F. 607) 533
First Nat. Bank of Cape Girardeau, Mo., Burke Brick Co. v. (249 F. 607) 533
First Nat. Bank of Cape Girardeau, Mo., Burke Bros. v. (249 F. 607) 533
First Nat. Bank of Towner, N. D., Stockyards Nat. Bank of St. Paul, Minn., v. (249 F. 421) 395
Flaherty, In re (249 F. 672) 582
Flannery, The W. H. (249 F. 349) 357
F. Marroquin & Co., Wormser Bros. v. (249 F. 428) 402
Franceschi v. Jones (248 F. 849) 3
Franklin Brewing Co., In re (249 F. 333) 341
Freeman, Farmers' State Bank v. (249 F. 579) 505
Fuller v. Reed (249 F. 158) 210

Gapinski, New York Cent. R. Co. v. (249 F. 346) 354
Garrison v. Kurt (249 F. 672) 582
Gesley v. South Side Trust Co. (249 F. 189) 225
General Electric Co. v. Cooper Hewitt Electric Co. (249 F. 61) 121
General Electric Co. v. Cooper Hewitt Electric Co. (249 F. 69) 129

Page

Gill v. White (249 F. 50) 110
Goldfield, Colo., v. Roger (249 F. 39) 99
Government of Canal Zone, Smith v. (249 F. 273) 281
Grand Rapids & I. R. Co. v. United States (249 F. 646) 556
Grand Rapids & I. R. Co. v. United States (249 F. 650) 560
Grand Trunk Western R. Co. v. United States (248 F. 905) 23
Greenbaum, In re (249 F. 468) 426
Gregorat v. United States (249 F. 470) 428
Grimwood, Munson S. S. Line v. (249 F. 722) 632

Haiku Sugar Co. v. Johnstone (249 F. 103) 155
Hammer v. United States (249 F. 336) ... 344
Hamner, Horner v. (249 F. 134) 186
Harris v. United States (249 F. 41) 101
Hart-Parr Co. v. Barth Mfg. Co. (249 F. 629) 539
Hauser Reversible Window Co., Simplex Window Co. v. (248 F. 919) 37
Hendrikson v. United States (249 F. 34) .. 94
Herring, Moller v. (249 F. 602) 528
Hickman, Western Union Tel. Co. v. (248 F. 899) 17
Hill, Fay v. (249 F. 415) 389
Hinckle, Rogers v. (249 F. 548) 474
Hitchcock, Appeal of (249 F. 23) 83
Homer Brooke Glass Co., Schram Glass Mfg. Co. v. (249 F. 228) 264
Horner v. Hamner (249 F. 134) 186
Horton v. Mendelsohn (249 F. 185) 221
Houck Mfg. Co., Cowen Co. v. (249 F. 285) 293
Houghton Wool Co. v. Morris (249 F. 434) 408
Howbert, Camp Bird v. (249 F. 27) 87
Hudson Products Co., T. A. Willson & Co. v. (249 F. 754) 664
Huffman Traction Engine Co., In re (249 F. 633) 543

Ingersoll Engineering & Constructing Co., Crocker v. (249 F. 31) 91
Irwin, Rensselaer & S. R. Co. v. (249 F. 726) 636

Jarmulowsky, In re (249 F. 319) 327
Johnstone, Haiku Sugar Co. v. (249 F. 103) 155
Jones, Franceschi v. (248 F. 849) 3
Jones Bros. & Co., In re (249 F. 579) 505

Kansas City, C. & S. R. Co. v. Shoemaker (249 F. 458) 416
Keansburg Steamboat Co., In re (249 F. 472) 430
Keatley v. United States Trust Co. (249 F. 296) 304
King v. Barbarin (249 F. 303) 311
Knotts v. Clark Const. Co. (249 F. 181) ... 217
Krauss, Campbell v. (249 F. 670) 580
Krouse v. Brevard Tannin Co. (249 F. 538) 464
Kurt, Garrison v. (249 F. 672) 582

Lauter Piano Co., Turner v. (248 F. 930) .. 48
Lebert v. Pacific Mail S. S. Co. (249 F. 349) 357
Leisy Brewing Co., Thompson Belden & Co. v. (249 F. 462) 420

Digitized by Google

Page

Leonard, Vanmanen v. (248 F. 939)..... 57
Lindley, Raydure v. (249 F. 675)..... 585
Lindley, Tipton v. (249 F. 675)..... 585
Long v. Christy (249 F. 410)..... 384
Louisville & N. R. Co. v. Western Union Tel. Co. (249 F. 385)..... 359
Lowes, In re (249 F. 654)..... 564

McCord & Co. v. Woods (249 F. 203)..... 239
McCormick v. Provident Life & Trust Co. of Philadelphia (249 F. 141)..... 193
McKey, Santowsky v. (249 F. 51)..... 111
Malcom, American Goggle Co. v. (249 F. 240) 276
Manheimer, Ulman v. (249 F. 691)..... 601
Marcmont, Collins Bros. Ice Cream Co. v. (249 F. 194)..... 230
Markley, Sheatz v. (249 F. 315)..... 323
Marroquin & Co., Wormser Bros. v. (249 F. 428) 402
Mason, The (249 F. 718)..... 628
Mayer v. A. & H. G. Mutschler (248 F. 911) 29
Mendelsohn, Horton v. (249 F. 185)..... 221
Mills, Third Ave. R. Co. v. (249 F. 661).. 571
Missouri Phonograph Co. v. Tomlinson (249 F. 658) 568
Moise, In re (249 F. 462)..... 420
Moller v. Herring (249 F. 602)..... 528
Morris, Houghton Wool Co. v. (249 F. 434) 408
Morris & Co., Alabama Great Southern R. Co. v. (249 F. 312)..... 320
Morrison v. Rieman (249 F. 97)..... 149
Moulthrop, Petition of (249 F. 468)..... 426
Moyers, Panama Electric R. Co. v. (249 F. 19) 79
M. S. Wright Co. v. Bissell Carper Sweeper Co. (249 F. 199)..... 235
Mullins Lumber Co., Williamson & Brown Land & Lumber Co. v. (249 F. 522).... 448
Munson S. S. Line v. Grimwood (249 F. 722) 632
Murray, Diamond Patent Co. v. (249 F. 155) 207
Mutschler, Mayer v. (248 F. 911)..... 29
Mutual Film Corporation, Stodart v. (249 F. 513) 439

Napier, The Baron (249 F. 126)..... 178
Nashville, C. & St. L. Ry., United States v. (249 F. 678)..... 588
National City Bank of Chicago v. Waller (249 F. 187)..... 223
National Hog Co., In re (249 F. 189).... 225
National Sweeper Co. v. Bissell Carpet Sweeper Co. (249 F. 196)..... 232
Newmark, In re (249 F. 341)..... 349
New York v. Carroll (249 F. 453)..... 411
New York Cent. R. Co. v. Gapinski (249 F. 346) 354
Nigretia, The (249 F. 348)..... 356
Nulomoline Co. v. Stromeyer (249 F. 597) 523

Odell v. Barton (249 F. 604)..... 530
Oklahoma, K. & M. I. R. Co. v. Bowling (249 F. 592)..... 518
Otis Mfg. Co., Pittsburgh & Southern Coal Co. v. (249 F. 667)..... 577

Pacific Mail S. S. Co., Lebert v. (249 F. 349) 357

Page

Paine v. Cumberland Telephone & Telegraph Co. (249 F. 477)..... 435
Panama Electric R. Co. v. Moyers (249 F. 19) 79
Pennsylvania Co. v. Avran (249 F. 474)... 432
People's Trust Co., Petitions of (249 F. 333) 341
Phelan v. United States (249 F. 43)..... 103
Phœnix Hardware Co., In re (249 F. 410) 384
Pilson v. United States (249 F. 328)..... 336
Pittsburgh & Southern Coal Co. v. Otis Mfg. Co. (249 F. 667)..... 577
Porterville Citrus Ass'n v. Stebler (248 F. 916) 34
Porterville Citrus Ass'n, Stebler v. (248 F. 927) 45
Porto Rico Ry., Light & Power Co. v. United States (249 F. 16)..... 76
Postal Telegraph-Cable Co., Chicago Great Western R. Co. v. (249 F. 664)..... 574
Provident Life & Trust Co. of Philadelphia, McCormick v. (249 F. 141)..... 193
P. & M. Co. v. Ajax Rail Anchor Co. (249 F. 215)..... 251

Ralph v. Cole (249 F. 81)..... 133
Rathbone, Appeal of (249 F. 455)..... 413
Raydure v. Lindley (249 F. 675)..... 585
Reed, Fuller v. (249 F. 158)..... 210
Reeves v. York Engineering & Supply Co. (249 F. 513)..... 439
Reid v. Shaffer (249 F. 553)..... 479
Rensselaer & S. R. Co. v. Irwin (249 F. 726) 636
Rieman, Morrison v. (249 F. 97)..... 149
Ringrose & Draper, In re (249 F. 434).... 408
Roger v. City of Goldfield, Colo. (249 F. 39) 99
Rogers v. Hinckle (249 F. 548)..... 474
Russell Grader Mfg. Co., F. B. Zieg Mfg. Co. v. (249 F. 56).....116

Safe-Cabinet Co., Wege v. (249 F. 696)....606
Salmon, In re (249 F. 300)..... 308
San Guglielmo, The (249 F. 588)..... 514
Santowsky v. McKey (249 F. 51)..... 111
Scattergood v. American Pipe & Construction Co. (249 F. 23)..... 83
Schaeffer, Turner v. (249 F. 654)..... 564
Schoonmaker, Appeal of (249 F. 600)... 526
Schram Glass Mfg. Co. v. Homer Brooke Glass Co. (249 F. 228)..... 264
Schultz, Petition of (249 F. 606)..... 532
Seegmiller v. Day (249 F. 177)..... 213
Selden, Atlantic Coast Line R. Co. v. (249 F. 122)..... 174
Shaffer, Reid v. (249 F. 553)..... 479
Shaw, Bergen Point Iron Works v. (249 F. 466)..... 424
Shawnee Nat. Bank v. United States (249 F. 583)..... 509
Sheatz v. Markley (249 F. 315)..... 323
Sheffer, The C. R. (249 F. 600)..... 526
Shoemaker, Kansas City, C. & S. R. Co. v. (249 F. 458)..... 416
Simmons Mfg Co., Vulcan Metals Co. v. (248 F. 853)..... 7
Simplex Window Co. v. Hauser Reversible Window Co. (248 F. 919)..... 37

Digitized by Google

Page

Skinner v. Union Pac. Coal Co. (249 F. 152) 204
Smith v. Corrigan (249 F. 273)..... 281
Smith, E. I. Du Pont de Nemours & Co. v. (249 F. 403)..... 377
Smith v. Government of Canal Zone (249 F. 273)..... 281
Smith & Terry, Clinton v. (249 F. 119).. 171
Smith & Terry v. Ebner (249 F. 119).... 171
Soltmann, In re (249 F. 455)..... 413
South Side Trust Co., Gealey v. (249 F. 189) 225
Southwestern Gas & Electric Co. v. Thomas (249 F. 325)..... 333
Spiller, Atchison, T. & S. F. R. Co. v. (249 F. 677)..... 587
Standart Art Glass Co., Bayley & Sons v. (249 F. 478)..... 436
Stebler v. Porterville Citrus Ass'n (248 F. 927)..... 45
Stebler, Porterville Citrus Ass'n v. (248 F. 916)..... 34
Stern, Edmonds v. (248 F. 897)..... 15
Stewart Mfg. Co., Automatic Pencil Sharpener Co. v. (249 F. 52)..... 112
Stockyards Nat. Bank of St. Paul, Minn., v. First Nat. Bank of Towner, N. D. (249 F. 421)..... 395
Stodart v. Mutual Film Corporation (249 F. 513)..... 439
Stokes v. Williams (249 F. 114)..... 166
Stromeyer, Nulomoline Co. v. (249 F. 597) 523
Stubbs v. United States (249 F. 571).... 497

T. A. Willson & Co. v. Hudson Products Co. (249 F. 754)..... 664
Taylor v. Wells Fargo & Co. (249 F. 109) 161
Third Ave. R. Co. v. Mills (249 F. 661).. 571
Thomas, Southwestern Gas & Electric Co. v. (249 F. 325)..... 333
Thompson Belden & Co. v. Leisy Brewing Co. (249 F. 462)..... 420
Tipton v. Lindley (249 F. 675)..... 585
Tomlinson, Missouri Phonograph Co. v. (249 F. 658)..... 568
Turner v. Lauter Piano Co. (248 F. 930).. 48
Turner v. Deere & Webber Bldg. Co. (249 F. 752)..... 662
Turner v. Schaeffer (249 F. 654)..... 564

Ulman v. Manheimer (249 F. 691)..... 601
Union Pac. Coal Co., Skinner v. (249 F. 152) 204
Union Tool Co. v. Wilson (249 F. 736).... 646
Union Tool Co., Wilson & Willard Mfg. Co. v. (249 F. 729)..... 639
United States, Billingsley v. (249 F. 331) 339
United States, Couts v. (249 F. 595)..... 521
United States, De Lacey v. (249 F. 625).. 535
United States v. Denver & R. G. R. Co. (249 F. 464)..... 422
United States, Dosset v. (248 F. 902).... 20
United States, Edwards v. (249 F. 686).. 596
United States, Feener v. (249 F. 425).... 399
United States, Grand Rapids & I. R. Co. v. (249 F. 646)..... 556
United States, Grand Rapids & I. R. Co. v. (249 F. 650)..... 560
United States, Grand Trunk Western R. Co. v. (248 F. 905)..... 23

Page

United States, Gregorat v. (249 F. 470)... 428
United States, Hammer v. (249 F. 336).. 344
United States, Harris v. (249 F. 41)..... 101
United States, Hendrikson v. (249 F. 34).. 94
United States v. Nashville, C. & St. L. Ry. (249 F. 678)..... 588
United States, Phelan v. (249 F. 43)..... 103
United States, Pilson v. (249 F. 328)... 336
United States, Porto Rico Ry., Light & Power Co. v. (249 F. 16)..... 76
United States, Shawnee Nat. Bank v. (249 F. 583)..... 509
United States, Stubbs v. (249 F. 571).... 497
United States, Voves v. (249 F. 191).... 227
United States Trust Co., Keatley v. (249 F. 296)..... 304

Vanmanen v. Leonard (248 F. 939)..... 57
Veler, In re (249 F. 633)..... 543
Voves v. United States (249 F. 191).... 227
Vulcan Metals Co. v. Simmons Mfg. Co. (248 F. 853)..... 7

Wagner v. Central Banking & Security Co. (249 F. 145)..... 197
Waller, In re (249 F. 187)..... 223
Waller, National City Bank of Chicago v. (249 F. 187)..... 223
Warten v. Brown (249 F. 48)..... 108
Webster Bros., Diamond Patent Co. v. (249 F. 155)..... 207
Wege v. Safe-Cabinet Co. (249 F. 696)... 606
Wells, Fargo & Co., Taylor v. (249 F. 109) 161
West Coast Roofing & Mfg. Co. v. Elaborated Ready Roofing Co. (249 F. 221).. 257
Western Union Tel. Co. v. Hickman (248 F. 899)..... 17
Western Union Tel. Co., Louisville & N. R. Co. v. (249 F. 385)..... 359
West India S. S. Co. v. Chicago House Wrecking Co. (249 F. 338)..... 346
W. H. Flannery, The (249 F. 349)..... 357
Whitaker v. Whitaker Iron Co. (249 F. 531) 457
Whitaker Iron Co., Whitaker v. (249 F. 531) 457
White, Gill v. (249 F. 50)..... 110
Wilkes, Bolin v. (249 F. 705)..... 615
Williams v. Canary (249 F. 344)..... 352
Williams, Stokes v. (249 F. 114)..... 166
Williamson & Brown Land & Lumber Co. v. Mullins Lumber Co. (249 F. 522).... 448
Willson & Co. v. Hudson Products Co. (249 F. 754)..... 664
Wilson, Petition of (249 F. 319)..... 327
Wilson, Union Tool Co. v. (249 F. 736).. 646
Wilson & Willard Mfg. Co. v. Union Tool Co. (249 F. 729)..... 639
Wonder Mfg. Co. v. Block (249 F. 748).. 658
Woods, McCord & Co. v. (249 F. 203).... 239
Wormser Bros. v. F. Marroquin & Co. (249 F. 428)..... 402
Wright Co. v. Bissell Carpet Sweeper Co. (249 F. 199)..... 235

York Engineering & Supply Co., Reeves v. (249 F. 513)..... 439

Zieg Mfg. Co. v. Russell Grader Mfg. Co. (249 F. 56)..... 116

Digitized by Google

CASES REPORTED

ARRANGED UNDER THEIR RESPECTIVE CIRCUITS

FIRST CIRCUIT.

Page

Feener v. United States (249 F. 425).... 399
Franceschi v. Jones (248 F. 849)..... 3
Fuller v. Reed (249 F. 158)..... 210

Houghton Wool Co. v. Morris (249 F. 434) 408

Porto Rico Ry., Light & Power Co. v. United States (249 F. 16)..... 76

Ringrose & Draper, In re (249 F. 434).... 408

SECOND CIRCUIT.

American Druggists' Syndicate v. Continental Specialty Co. of Baltimore, Md. (249 F. 290)..... 298

Barley & Sons v. Standart Art Glass Co. (249 F. 478)..... 436
Bortz, Petition of (249 F. 319)..... 327

Carroll v. City of New York (249 F. 453) 411
Cascade, The (249 F. 718)..... 628
Chavkin, In re (249 F. 342)..... 350
City of New York v. Carroll (249 F. 453) 411
Colon. The (249 F. 460)..... 418
Cowen Co. v. Houck Mfg. Co. (249 F. 285) 293
C. R. Sheffer, The (249 F. 600)..... 526

Domestic Vacuum Cleaner Co. v. Bissell Carpet Sweeper Co. (249 F. 201)..... 237

Edmonds v. Stern (248 F. 897)..... 15

Farley v. Carey Show Print Co. (249 F. 476)..... 434
Flannery, The W. H. (249 F. 349)..... 357
Franklin Brewing Co., In re (249 F. 333) 341

Hammer v. United States (249 F. 336)... 344

Jarmulowsky, In re (249 F. 319)..... 327

Keansburg Steamboat Co., In re (249 F. 472)..... 430
Keatley v. United States Trust Co. (249 F. 296)..... 304

Mason, The (249 F. 718)..... 628
Mayer v. A. & H. G. Mutschler (248 F. 911)..... 29

Page

Missouri Phonograph Co. v. Tomlinson (249 F. 658)..... 568
M. S. Wright Co. v. Bissell Carpet Sweeper Co. (249 F. 199)..... 235
Munson S. S. Line v. Grimwood (249 F. 722)..... 632

National Sweeper Co. v. Bissell Carpet Sweeper Co. (249 F. 196)..... 232
Newmark, In re (249 F. 341)..... 349
New York v. Carroll (249 F. 453)..... 411
New York Cent. R. Co. v. Gapinski (249 F. 346)..... 354
Nigretia, The (249 F. 348)..... 356

People's Trust Co., Petitions of (249 F. 333)..... 341
Pilson v. United States (249 F. 328)..... 336

Rathbone, Appeal of (249 F. 455)..... 413
Rensselaer & S. R. Co. v. Irwin (249 F. 726)..... 636

Salmon, In re (249 F. 300)..... 308
San Guglielmo, The (249 F. 588)..... 514
Schoonmaker, Appeal of (249 F. 600)... 526
Sheffer, The C. R. (249 F. 600)..... 526
Soltmann, In re (249 F. 455)..... 413
Stodart v. Mutual Film Corporation (249 F. 513)..... 439

T. A. Willson & Co. v. Hudson Products Co. (249 F. 754)..... 664
Third Ave. R. Co. v. Mills (249 F. 661).. 571

Vulcan Metals Co. v. Simmons Mfg. Co. (248 F. 853)..... 7

West India S. S. Co. v. Chicago House Wrecking Co. (249 F. 338)..... 346
W. H. Flannery, The (249 F. 349)..... 357
Willson & Co. v. Hudson Products Co. (249 F. 754)..... 664
Wilson, Petition of (249 F. 319)..... 327
Wright Co. v. Bissell Carpet Sweeper Co. (249 F. 199)..... 235

THIRD CIRCUIT.

Alexander v. Fidelity Trust Co. (249 F. 1) 61

Campbell v. Krauss (249 F. 670)..... 580

Digitized by Google

Page

Dittmar, In re (249 F. 606) 532

Fidelity Trust Co. v. Alexander (249 F. 1) ·61

Gealey v. South Side Trust Co. (249 F. 189) 225

Hitchcock, Appeal of (249 F. 23) ..... ´83
Horton v. Mendelsohn (249 F. 185) 221

National Hog Co., In re (249 F. 189) 225
Nulomoline Co. v. Stromeyer (249 F. 597) 523

Scattergood v. American Pipe & Construction Co. (249 F. 23) 83
Schultz, Petition of (249 F. 606) 532
Sheatz v. Markley (249 F. 315) 323
Stokes v. Williams (249 F. 114) 166

Turner v. Lauter Piano Co. (248 F. 930) .. 48

FOURTH CIRCUIT.

Atlantic Coast Line R. Co. v. Selden (249 F. 122) 174

Bank of Commerce v. Brown (249 F. 37) 97
Baron Napier, The (249 F. 126) 178

Clinton v. Smith & Terry (249 F. 119) ... 171

Duncan, In re (249 F. 155) 207
Du Pont de Nemours & Co. v. Smith (249 F. 403) 377

E. I. Du Pont de Nemours & Co. v. Smith (249 F. 403) 377

Hendrikson v. United States (249 F. 34) .. 94
Horner v. Hamner (249 F. 134) 186

Krouse v. Brevard Tannin Co. (249 F. 538) 464

McCormick v. Provident Life & Trust Co. of Philadelphia (249 F. 141) 193

Rogers v. Hinckle (249 F. 548) 474

Smith & Terry v. Ebner (249 F. 119) 171

Wagner v. Central Banking & Security Co. (249 F. 145) 197
Western Union Tel. Co. v. Hickman (248 F. 899) 17
Whitaker v. Whitaker Iron Co. (249 F. 531) 457
Williamson & Brown Land & Lumber Co. v. Mullins Lumber Co. (249 F. 522) 448

FIFTH CIRCUIT.

Alabama Great Southern R. Co. v. Morris & Co. (249 F. 312) 320
Alabama & V. R. Co. v. American Cotton Oil Co. (249 F. 308) 316

Bergen Point Iron Works v. Shaw (249 F. 466) 424

Page

Boisot v. Faller (249 F. 193) 229
Bolin v. Wilkes (249 F. 705) 615

Clark v. Fairbanks (249 F. 431) 405

Dixie, The (249 F. 46) 106

Faller v. Boisot (249 F. 193) 229

Gregorat v. United States (249 F. 470) 428

Lebert v. Pacific Mail S. S. Co. (249 F. 349) 357

Moller v. Herring (249 F. 602) 528

Paine v. Cumberland Telephone & Telegraph Co. (249 F. 477) 435
Panama Electric R. Co. v. Moyers (249 F. 19) 79
Pittsburgh & Southern Coal Co. v. Otis Mfg. Co. (249 F. 667) 577

Reeves v. York Engineering & Supply Co. (249 F. 513) 439

Smith v. Corrigan (249 F. 273) 281
Smith v. Government of Canal Zone (249 F. 273) 281
Southwestern Gas & Electric Co. v. Thomas (249 F. 325) 333

Taylor v. Wells Fargo & Co. (249 F. 109) 161

Warten v. Brown (249 F. 48) 108
Wormser Bros. v. F. Marroquin & Co. (249 F. 428) 402

SIXTH CIRCUIT.

Crocker v. Ingersoll Engineering & Constructing Co. (249 F. 31) 91

Edwards v. United States (249 F. 686) 596

F. B. Zieg Mfg. Co. v. Russell Grader Mfg. Co. (249 F. 56) 116

General Electric Co. v. Cooper Hewitt Electric Co. (249 F. 61) 121
General Electric Co. v. Cooper Hewitt Electric Co. (249 F. 69) 129
Grand Rapids & I. R. Co. v. United States (249 F. 646) 556
Grand Rapids & I. R. Co. v. United States (249 F. 650) 560
Grand Trunk Western R. Co. v. United States (248 F. 905) 23
Greenbaum, In re (249 F. 468) 426

Huffman Traction Engine Co., In re (249 F. 633) 543

King v. Barbarin (249 F. 303) 311

Louisville & N. R. Co. v. Western Union Tel. Co. (249 F. 385) 359
Lowes, In re (249 F. 654) 564

Moulthrop, Petition of (249 F. 468) 426

Digitized by Google

Page
Pennsylvania Co. v. Avran (249 F. 474)... 432

Raydure v. Lindley (249 F. 675)..... 585
Reid v. Shaffer (249 F. 553)..... 479

Tipton v. Lindley (249 F. 675)..... 585
Turner v. Schaeffer (249 F. 654)..... 564

Ulman v. Manheimer (249 F. 691)..... 601
United States v. Nashville, C. & St. L. Ry. (249 F. 678) 588

Vanmanen v. Leonard (248 F. 939)..... 57
Veler, In re (249 F. 633)..... 543

Wege v. Safe-Cabinet Co. (249 F. 696)... 606

Zieg Mfg. Co. v. Russell Grader Mfg. Co. (249 F. 56)..... 116

SEVENTH CIRCUIT.

American Goggle Co. v. Malcom (249 F. 240) 276
American Valve & Meter Co. v. Fairbanks, Morse & Co. (249 F. 234)..... 270
Automatic Pencil Sharpener Co. v. Stewart Mfg. Co. (249 F. 52)..... 112

Bone v. Commissioners of Marion County (249 F. 211)..... 247

Chicago Great Western R. Co. v. Postal Telegraph-Cable Co. (249 F. 664)..... 574
Chicago & A. R. Co. v. Allen (249 F. 280) 288
Cloverdale Creamery Co., In re (249 F. 194) 230
Collins Bros. Ice Cream Co. v. Maremont (249 F. 194)..... 230

Federal Life Ins. Co., In re (248 F. 908) 26

Knotts v. Clark Const. Co. (249 F. 181)... 217

McCord & Co. v. Woods (249 F. 203)..... 239
Morrison v. Rieman (249 F. 97)..... 149

National City Bank of Chicago v. Waller (249 F. 187)..... 223

P. & M. Co. v. Ajax Rail Anchor Co. (249 F. 215)..... 251

Santowsky v. McKey (249 F. 51)..... 111
Schram Glass Mfg. Co. v. Homer Brooke Glass Co. (249 F. 228)..... 264
Seegmiller v. Day (249 F. 177)..... 213

Voves v. United States (249 F. 191).... 227

Waller, In re (249 F. 187)..... 223
West Coast Roofing & Mfg. Co. v. Elaborated Ready Roofing Co. (249 F. 221).. 257

EIGHTH CIRCUIT.

Atchison, T. & S. F. R. Co. v. Spiller (249 F. 677)..... 587

Page
Bartlett & Kling v. Dings (249 F. 322)... 330
Burke v. First Nat. Bank of Cape Girardeau, Mo. (249 F. 607)..... 533
Burke Brick Co. v. First Nat. Bank of Cape Girardeau, Mo. (249 F. 607)..... 533
Burke Bros. v. First Nat. Bank of Cape Girardeau, Mo. (249 F. 607)..... 533

Camp Bird v. Howbert (249 F. 27)..... 87
City of Goldfield, Colo., v. Roger (249 F. 39) 99
Couts v. United States (249 F. 595)..... 521

Dosset v. United States (248 F. 902)..... 20

Farmers' State Bank v. Freeman (249 F. 579) 505
Fay v. Hill (249 F. 415)..... 389
Flaherty, In re (249 F. 672)..... 582

Garrison v. Kurt (249 F. 672)..... 582

Harris v. United States (249 F. 41)..... 101
Hart-Parr Co. v. Barth Mfg. Co. (249 F. 629) 539

Jones Bros. & Co., In re (249 F. 579).... 505

Kansas City, C. & S. R. Co. v. Shoemaker (249 F. 458)..... 416

Moise, In re (249 F. 462)..... 420

Odell v. Barton (249 F. 604)..... 530
Oklahoma, K. & M. I. R. Co. v. Bowling (249 F. 592)..... 518

Roger v. City of Goldfield, Colo. (249 F. 39) 99

Shawnee Nat. Bank v. United States (249 F. 583)..... 509
Skinner v. Union Pac. Coal Co. (249 F. 152) 204
Stockyards Nat. Bank of St. Paul, Minn., v. First Nat. Bank of Towner, N. D. (249 F. 421)..... 395

Thompson Belden & Co. v. Leisy Brewing Co. (249 F. 462)..... 420
Turner v. Deere & Webber Bldg. Co. (249 F. 752)..... 662

United States v. Denver & R. G. R. Co. (249 F. 464)..... 422

Williams v. Canary (249 F. 344)..... 352

NINTH CIRCUIT.

Billingsley v. United States (249 F. 331) 339

De Lacey v. United States (249 F. 625).. 535
Diamond Patent Co. v. Murray (249 F. 155) 207
Diamond Patent Co. v. Webster Bros. (249 F. 155)..... 207

Edwards v. Bodkin (249 F. 562)..... 488

Digitized by Google

Page

Gill v. White (249 F. 50) 110

Haiku Sugar Co. v. Johnstone (249 F. 103) 155

Long v. Christy (249 F. 410) 384

Phelan v. United States (249 F. 43) 103

Phœnix Hardware Co., In re (249 F. 410) 384

Porterville Citrus Ass'n v. Stebler (248 F. 916) 34

Ralph v. Cole (249 F. 81) 133

Page

Simplex Window Co. v. Hauser Reversible Window Co. (248 F. 919) 37

Stebler v. Porterville Citrus Ass'n (248 F. 927) 45

Stubbs v. United States (249 F. 571) 497

Union Tool Co. v. Wilson (249 F. 736) 646

Wilson & Willard Mfg. Co. v. Union Tool Co. (249 F. 729) 639

Wonder Mfg. Co. v. Block (249 F. 748) .. 658

CASES PASSED UPON

CASES IN THE UNITED STATES CIRCUIT COURTS OF APPEALS WHICH HAVE BEEN PASSED UPON BY THE SUPREME COURT OF THE UNITED STATES

Edwards v. United States, 161 C. C. A. 596. Writ of certiorari. Certiorari denied October 21, 1918, 39 S. Ct. 7.

Raydure v. Lindley, 161 C. C. A. 585. Writ of certiorari. Certiorari denied June 3, 1918, 38 S. Ct. 580, 247 U. S. 513, 62 L. Ed. —.

Tipton v. Lindley, 161 C. C. A. 585. Writ of certiorari. Certiorari denied June 3, 1918, 38 S. Ct. 580, 247 U. S. 513, 62 L. Ed. —.

Turner v. Deere & Webber Bldg. Co., 161 C. C. A. 662. Writ of certiorari. Certiorari denied October 28, 1918, 39 S. Ct. 9.

Union Tool Co. v. Wilson, 161 C. C. A. 646. Writ of certiorari. Certiorari denied October 21, 1918, 39 S. Ct. 6.

Whitaker v. Whitaker Iron Co., 161 C. C. A. 457. Writ of certiorari. Certiorari denied October 21, 1918, 39 S. Ct. 8.

Wilson-Willard Mfg. Co. v. Union Tool Co., 161 C. C. A. 639. Writ of certiorari. Certiorari denied October 21, 1918, 39 S. Ct. 6.

†

Digitized by Google

CASES

ARGUED AND DETERMINED

IN THE

UNITED STATES CIRCUIT COURTS OF APPEALS

Digitized by Google

Digitized by Google

(248 Fed. 849)

FRANCESCHI v. JONES et al.

(Circuit Court of Appeals, First Circuit. March 13, 1918.)

No. 1282.

1. MORTGAGES ⟹33(5)—CONVEYANCE AND LEASE TO GRANTOR—EFFECT.
Where the record owners of land, to which they had taken title by absolute conveyance leased it to their grantor with option to purchase, they were not mortgagees, but owners of the land.

2. JUDGMENT ⟹649—ORDER NOT ACTED ON—EFFECT.
Where, in proceedings for the settlement of the estate of one having a lease on Porto Rico lands with an option to purchase, the court made orders which by agreement of the parties treated the lessors as mortgagees, it being agreed that if payment was not made within six months the lessors should have the right to set the same aside, such orders, not having been acted on, cannot be deemed to have divested the lessors of their title so that the heirs of the lessee could convey title to the property subject only to the rights of the lessors as mortgagees, for the order really only evidenced a provisional agreement for the sale of the lands.

Appeal from the District Court of the United States for the District of Porto Rico; Peter J. Hamilton, Judge.

Bill by Antonio Franceschi y Franceschi against Walter McK. Jones and others. From a decree of the District Court of the United States for the District of Porto Rico, dismissing the bill, complainant appeals. Decree affirmed.

Jose A. Poventud, of Ponce, P. R., for appellant.

Francis E. Neagle, of New York City (Woodward Emery, of Boston, Mass., on the brief), for appellees.

Before DODGE, BINGHAM, and JOHNSON, Circuit Judges.

DODGE, Circuit Judge. Franceschi appeals from a decree of the District Court of March 2, 1916, dismissing a bill in equity filed by him December 17, 1915. In the bill he alleged that he owned an undivided eight-ninths of a plantation containing about 444 acres, called "Limon," then and since July 21, 1910, in the possession of Jones, here appellee; and that Jones, except as to an undivided interest, not exceeding the remaining one-ninth, had only a mortgagee's interest therein. He asked that Jones be ordered to deliver possession to him as majority owner, and that he be allowed to redeem the property from the alleged mortgage. Other allegations and prayers of the bill need not be here stated.

Jones was owner of the whole estate in dispute, according to the conveyances appearing of record, having bought it from its prior record owners, the succession of Vicente Alvarado; whose recorded conveyances to him are dated May 29, 1910, and March 2, 1911. The first of these conveyances transferred the property to him subject to all the equities which may have originated from a suit in equity, also in the District Court, known as "Olivieri v. Olivieri," and further referred to below. By their second conveyance, however, the grantors

⟹For other cases see same topic & KEY-NUMBER in all Key-Numbered Digests & Indexes

Digitized by Google

withdrew all such reservations and conveyed to Jones full title without reservations.

Franceschi's assertion that Jones' rights were only those of a mortgagee rests wholly upon an order made on June 7, 1907, by the then judge of the District Court, in the case referred to. A final decree in said case, entered May 18, 1910, is alleged to have confirmed said order of June 7, 1907. Jones has denied, in his answer to the bill, that said order or final decree was effective for any such purpose. The circumstances under which they were made may be stated as follows:

On October 24, 1900, the widow and children of Vicente Alvarado, constituting his succession, and being the then owners of the Limon estate, here involved, leased it to Felix Olivieri for eight years, from August 1, 1900, at an annual rental of $1,872, agreeing in the lease to sell it to him at any time, within the term thereof for $15,600.

Olivieri died in 1901, in possession under said lease, but in arrears for the rent, and never having exercised his right to purchase. Olivieri v. Olivieri was a suit between his heirs to settle their respective claims to share in his estate, including this Limon property. A receiver appointed by the court assumed possession of all the property in dispute. On June 5, 1907, the above-mentioned lessors filed an intervening petition in the suit, praying for a decree directing the receiver to turn over the Limon estate to them, alleging that they were its owners, and that the above lease and agreement were no longer in force; $4,130 being overdue for rent, and no steps having been taken towards the purchase contemplated. The lease or agreement provided that it should be considered as rescinded in case of failure to pay the rent, and the lessors have the right to take immediate possession.

Judge Rodey, the then District Judge, before said petition had been answered, undertook, after conference with the parties or their counsel, to enter the order or decree here in controversy, on June 7, 1907. After reciting, among other things, that the intervener's counsel had announced that all they prayed in the premises was "The payment to them of whatever sum may be found to be due them by the Olivieri estate, and to hold their lien upon the premises described therein until the same is paid," and reciting further that, "It being considered that this statement of fact will eliminate considerable controversy in the premises as to the construction of the instrument, * * * the same having been admitted by said interveners to be a mortgage lien," the order went on to provide:

> "That all the property mentioned in the said intervening petition * * * be and the same is hereby considered to belong to the said Olivieri estate, subject to the mortgage lien of the said interveners, * * * the difference between the parties as to the amount due upon said mortgage to be hereafter duly determined by the court. It is further understood that the court, through its officers and receiver, is to make an effort to have this and other specific liens duly ascertained as to amount, and paid off with all convenient speed, and in case that sufficient money is not realized six months from this date, counsel for the said (interveners) shall have the right to move to set aside the agreement they have this day made, the same to be then subject to the discretion of the court as to being granted or not."

None of the steps contemplated by the above order were ever taken, nor was the intervening petition by the Alvarados ever answered.

Digitized by Google

More than two years later, on August 12, 1909, there was another conference of counsel with the same District Judge, resulting in a stipulation that day filed with his approval which provided for an entirely different settlement between the parties. In this the Alvarados agreed to "accept in full of their entire claim, deed, mortgage or debt" the Limon estate here in controversy, and an adjoining tract of about 446 acres; they to pay a specified sum upon receiving clear title to the whole from the Olivieri heirs and the court. But, as had been the case with the proceedings contemplated in the previous order of June 7, 1907, none of the agreements embodied in said stipulation were ever carried into effect. They were to become effective only upon the entries of certain further decrees proposed which were never entered.

Thereafter, on May 18, 1910, a so-called final decree in Olivieri v. Olivieri was entered by the same District Judge, who also filed on the same day certain findings of fact made by him. Adelaida Olivieri, plaintiff in the case, was declared entitled to a certain undivided share of and interest in the property left by her father. To the Limon estate no express reference was made. Neither expressly nor by implication, so far as we can see, did the court undertake to adjudge that it formed part of her father's property, or that the Alvarados stood in any other relation to it than that of its owners. The case was continued for further supplementary or incidental proceedings.

It was after the entry of this "final decree," and nearly three years after Judge Rodey's order of June 7, 1907, that Jones took title to the property from the Alvarados, as above. Having thus acquired it, he filed a petition, in July, 1910, in Olivieri v. Olivieri, asking that the receiver in that case be ordered to deliver possession of it to him. In a motion or answer filed July 10, 1910, Franceschi opposed the order for delivery asked for. This alleged Franceschi to be assignee of the rights to five-ninths in all of the Olivieri inheritance, and one Juan Felix Olivieri, joined with him in the motion, to represent another one-ninth. It further alleged that the court had determined that the Alvarado claim upon the Limon estate was "only a mortgage claim and lien," and that any or all the Olivieri heirs were entitled to exercise "the right of legal redemption" against Jones or whoever claimed under him.

Notwithstanding Franceschi's opposition, after a hearing in the District Court, before Judge Jenkins, who had succeeded Judge Rodey, Jones was held entitled to possession, and on July 21, 1910, the court ordered its receiver to deliver possession to him, reserving all other questions raised under his petition for further determination. By a petition dated September 14, 1911, Franceschi asked the District Court to set aside the order of July 21, 1910, alleging that it had been entered "without any jurisdiction or right for making the same." This petition was brought by Franceschi alone. In it the above order of June 7, 1907, was set forth at length, and also parts of the above final decree entered May 18, 1910. On November 15, 1911, this petition was heard and overruled by Judge Jenkins' successor, Judge Charlton. Jones' possession under the title conveyed to him by the Alvarados has thus continued, without interruption, since July, 1910.

Digitized by Google

The only rights in the property asserted by Franceschi are, as appears from his bill, rights assigned to him by heirs of Felix Olivieri at various times between May 19, 1910, and October 26, 1912. Unless he had shown that the Olivieri succession owned the property and that Jones' grantors, the Alvarados, had only a mortgagee's interest capable of being conveyed by them to him, Franceschi's bill could not be maintained and was rightly dismissed.

[1] Various dealings relating to the property, between Felix Olivieri and the Alvarados, prior to their above lease to him on October 24, 1900, appear from the record. The earliest in date was an absolute conveyance of the property from him to them, in 1878, in payment of a debt. These dealings and the documents evidencing them are reviewed in the opinion of the District Court ordering dismissal of Franceschi's bill. The District Judge concluded from them that there was nothing to show said lease to have been anything except what it purported to be on its face, a lease of the property with the option to purchase. In this conclusion we agree. It follows that the Alvarados were owners, not mortgagees, of the property at the time of Olivieri's death, and that such rights as belonged to Olivieri by virtue of his leasehold interest were, at most, all that the Olivieri succession could claim.

[2] With regard to Judge Rodey's order of June 7, 1907, the District Court considered his subsequent order on August 12, 1909, as showing that the order of June 7, 1907, could not have been regarded by the parties or by the court as settling the nature of the Alvarado claim to the property. As to the recitals of consent in said order, evidence was held admissible to show the circumstances under which it was made, and the conclusion was reached that said order was intended only as "a provisional arrangement under which the parties and the court hoped that a sale of the property would be made, whereby every one would receive what was due to him." The District Court further found that there had in effect been a disaffirmance within the six months' period referred to in Judge Rodey's order; the whole plan having fallen through, and the decree contemplated by the order having thereupon been permitted to lapse. In these conclusions we find no error, and none, therefore, in the dismissal of Franceschi's bill because of them.

The same order of June 7, 1907, has been before us upon appeal in another case from the same District Court. Jones v. Pettingill et al., 245 Fed. 269, 277, 278, 157 C. C. A. 461. We find no reason to modify the views there expressed against its efficacy as a determination of title to the property here involved.

It is unnecessary, in view of the conclusions above stated, to discuss in detail the further defence asserted by Jones, that Franceschi had in any event estopped himself from asserting rights in the property adverse to Jones, such as the bill alleges, by his written agreement with Jones, dated October 29, 1912. This was an agreement made in view of a claim presented by Jones against the Olivieri succession, in Olivieri v. Olivieri, for unpaid rentals under the above lease; Jones having acquired the Alvarados' rights thereto. In consideration of

Digitized by Google

Jones' waiver of the claim thus presented, and of his agreement to dismiss his petition based upon them, Franceschi made sale to Jones of certain other property at an agreed price. The District Court found that Jones had consistently acted upon this agreement, and had given up the rents claimed by him. Franceschi fails to satisfy us that the District Court erred in so concluding.

The decree of the District Court appealed from is affirmed, and the appellee recovers his costs of appeal.

(248 Fed. 853)

VULCAN METALS CO., Inc., v. SIMMONS MFG. CO.

VULCAN METALS CO., Inc., et al. v. SAME.

(Circuit Court of Appeals, Second Circuit. January 7, 1918. On Petition of Plaintiffs in Error for a Rehearing, February 13, 1918.)

Nos. 35, 36.

1. FRAUD ⟹11(1)—SALE—MISREPRESENTATIONS—PUFFING.
   Where the buyer of vacuum cleaners and materials and machinery for their manufacture was allowed full opportunity to inspect the cleaners and test them, misrepresentations concerning their qualities and powers should be deemed mere puffing talk, which would not give rise to an action for deceit.

2. FRAUD ⟹11(1)—MISREPRESENTATION—SALES.
   Where a seller of a large number of vacuum cleaners already manufactured, with materials and machinery for their manufacture, represented that they had not been put on the market, such representation was one of fact, the falsity of which would give rise to an action for deceit.

3. FRAUD ⟹64(1)—ACTIONS—EVIDENCE—QUESTION FOR JURY.
   Where a buyer asserted that the seller was guilty of false representations, amounting to deceit, the question whether the seller's representatives made the representations asserted *held*, under the evidence, for the jury.

4. FRAUD ⟹36—MISREPRESENTATIONS—DEFENSES—RETRACTION.
   A seller's retraction of a false statement made in negotiations prior to the time the parties entered into the contract is a good defense in an action for deceit by the buyer, and this is so where the seller delivered to the buyer a written retraction under circumstances warranting the belief that the buyer would inform himself of its contents.

5. FRAUD ⟹50—ACTIONS—BURDEN OF PROOF.
   Where a buyer asserted that the seller made a false statement, and the seller defended on the ground that it had retracted the same, the burden of proving the retraction is on the seller.

6. FRAUD ⟹64(1)—ACTIONS—JURY QUESTION.
   A statement in a written contract of sale, showing that vacuum cleaners sold had been placed on the market, cannot as a matter of law be treated as a retraction of the seller's misrepresentations that such appliances had not been placed on the market; but the question whether the statement was brought to the notice of the buyer's representatives is for the jury.

7. SALES ⟹124—RESCISSION—RETURN OF GOODS.
   Where a buyer made no offer to return articles delivered, he cannot, despite the seller's misrepresentations, rescind the contract, and escape liability on notes given for the purchase price.

⟹For other cases see same topic & KEY-NUMBER in all Key-Numbered Digests & Indexes

Digitized by Google

8. BROKERS ⟹94—AUTHORITY—REPRESENTATIONS.

A broker, who for a corporation negotiated a sale of vacuum cleaners, with machinery and materials for their manufacture, is without authority to make representations that such cleaners had not previously been put on the market.

On Petition of Plaintiffs in Error for a Rehearing.

9. SALES ⟹348(1)—SUBJECT-MATTER OF COUNTERCLAIM.

Under Code Civ. Proc. N. Y. § 501, declaring that the defendant may set up as a counterclaim a cause of action arising out of the contract or transaction set forth in the complaint as the foundation of plaintiff's claim, or connected with the subject-matter of the action, and in an action on contract any other cause of action existing at the commencement of the action, a buyer, sued on notes given for the purchase price, cannot set up as a counterclaim an action of deceit for the seller's misrepresentations.

Hough, Circuit Judge, dissenting in part, and Learned Hand, District Judge, dissenting in part on rehearing.

In Error to the District Court of the United States for the Southern District of New York.

Action by the Vulcan Metals Company, Incorporated, against the Simmons Manufacturing Company, begun in the state court and removed to the federal court, together with an action by the Simmons Manufacturing Company against the Vulcan Metals Company, Incorporated, and Albert Freeman, who counterclaimed. There was a judgment for the Simmons Manufacturing Company, defendant in the first action, and for it as plaintiff in the second, the counterclaim of the defendants Vulcan Metals Company, Incorporated, and Albert Freeman being dismissed, and the Vulcan Metals Company, Incorporated, and another bring error. Judgment in the action by the Vulcan Metals Company reversed, and judgment in action on notes modified, so as not to dismiss the counterclaim on the merits, and otherwise affirmed.

Writ of error to two judgments of the District Court for the Southern District of New York, entered in the first case upon a verdict directed by the court dismissing the complaint, and in the second case, upon a verdict directed by the court in favor of the plaintiff for the sum of $43,423.04. The complaint in the first action was for deceit, brought in the state court and removed for diversity of citizenship to the District Court. The complaint in the second was originally brought in the District Court, about a month after the first suit, and was upon three notes, for $15,000, $12,500, and $12,500, respectively. In the complaint on the second action the defendants set up the same facts which they laid in their complaint in deceit, and which they here pleaded as a defense to the action on the notes and as a counterclaim.

The gist of the complaint in the first action was the fraudulent procurement by the Simmons Manufacturing Company of a contract executed by the defendant Freeman on behalf of the Vulcan Metals Company, Incorporated, by which he purchased from the Simmons Company for $75,000 all the tools, dies, and equipment owned by it for the manufacture of its vacuum cleaning machines, all manufactured machines and unassembled parts, as set forth in a schedule thereto attached, and all inventions, applications, and letters patent owned by the Simmons Company in vacuum cleaners, together with certain proposed improvements to be made thereon. The complaint further alleges that the officers and agents of the Simmons Manufacturing Company made false representations as to the character of the vacuum cleaners so sold and the extent to which they had been used upon the market, to which the Vulcan

Digitized by Google

Metals Company, Incorporated, acted to its prejudice, because the machines and patents were totally inefficient and unmarketable. The notes sued on in the second cause of action were three of those given as part of the purchase price. The District Judge directed a verdict for the Simmons Manufacturing Company in both actions, upon the theory that no actionable fraud had been made out, and the correctness of this ruling is the turning point in the case.

The plaintiff in the first action was a corporation, of which Albert Freeman, one of the defendants in the second action, was a promoter. He was an indorser of the notes, and conducted the negotiations which resulted in the purchase by him of the vacuum cleaners on behalf of the plaintiff. He testified to certain representations made to him at the time as an inducement to his entering into the contract. These representations emanated in the first instance from one Flynn, who had been apparently authorized by the Simmons Manufacturing Company to act as a broker in the sale of the machines and the patents. Flynn's authority to represent the Simmons Manufacturing Company in respect of such representations would be a turning point in the case, except for the fact that Freeman swore that the president of the company, one Simmons, and its general counsel, Barnes, had repeated all of Flynn's statements during the negotiations and that he had relied upon them. It therefore became essential to determine, since Simmons was clearly authorized to represent the Simmons Manufacturing Company, whether the misrepresentations would support an action of deceit. They were of two classes—those touching the efficiency of the vacuum cleaner; and, second, that no attempt had been made to market the machines by the Simmons Manufacturing Company.

The first of these classes is substantially the same as those contained in a booklet issued by the Simmons Manufacturing Company for the general sale of the vacuum cleaners. They include commendations of the cleanliness, economy, and efficiency of the machine; that it was absolutely perfect in even the smallest detail; that water power, by which it worked, marked the most economical means of operating a vacuum cleaner with the greatest efficiency; that the cleaning was more thoroughly done than by beating or brushing; that, having been perfected, it was a necessity which every one could afford; that it was so simple that a child of six could use it; that it worked completely and thoroughly; that it was simple, long-lived, easily operated, and effective; that it was the only sanitary portable cleaner on the market; that perfect satisfaction would result from its use; that it would last a lifetime; that it was the only practical jet machine on the market; and that perfect satisfaction would result from its use, if properly adjusted. The booklet is in general the ordinary compilation, puffing the excellence and powers of the vacuum cleaner, and asserting its superiority over all others of a similar sort. Flynn made a demonstration of the cleaner to Freeman with borax sprinkled upon the carpet, and allowed him to take one for experiment, which he retained for some time.

The second class of misrepresentations was that the Simmons Manufacturing Company had not sold the machine, or made any attempt to sell it; that they had not shown it to any one; that it had never been on the market, and that no one outside of the company officials and the men in the factory knew anything about it; that they had manufactured 15,000 of them, but before making any attempt to market it they had been told by their agent that it would be a mistake for them to attempt to sell these along with their ordinary line, which was furniture; that on that account they had withdrawn them from the market and had never made any attempt to put them out. Sweetland, one of the promoters of the Vulcan Metals Company, Incorporated, swore that Flynn had stated that the machines had been marketed, but marketed successfully. There was therefore a discrepancy between the testimony of these two representations, but for the purposes of the action it is not here material, since the complaint was based upon the representation that the machines had not been sold.

There was evidence that the machines, when exploited by the Vulcan Metals Company, Incorporated, proved to be ineffective and of little or no value, and that their manufacture was discontinued by that company not very long

Digitized by Google

after they had undertaken it. There was also evidence that several of the Western agents of the Simmons Manufacturing Company had had the machines in stock and had attempted to market some of them; that they had been unsuccessful in these efforts, owing for the most part to the fact that the water pressures, where they had been sold, had not been sufficient to establish the necessary vacuum. Just what the vacuum was in the places where the machines were unsuccessful did not definitely appear in any of the proof.

Wilson B. Brice, of New York City (Charles H. Hyde, of New York City, of counsel), for Vulcan Metals Co., Inc.

Sullivan & Cromwell, of New York City (Clarke M. Rosecrantz and E. H. Sykes, both of New York City, of counsel), for Simmons Mfg. Co.

Before WARD and HOUGH, Circuit Judges, and LEARNED HAND, District Judge.

LEARNED HAND, District Judge (after stating the facts as above). [1] The first question is of the misrepresentations touching the quality and powers of the patented machine. These were general commendations, or, in so far as they included any specific facts, were not disproved; e. g., that the cleaner would produce 18 inches of vacuum with 25 pounds water pressure. They raise, therefore, the question of law how far general "puffing" or "dealers' talk" can be the basis of an action for deceit.

The conceded exception in such cases has generally rested upon the distinction between "opinion" and "fact"; but that distinction has not escaped the criticism it deserves. An opinion is a fact, and it may be a very relevant fact; the expression of an opinion is the assertion of a belief, and any rule which condones the expression of a consciously false opinion condones a consciously false statement of fact. When the parties are so situated that the buyer may reasonably rely upon the expression of the seller's opinion, it is no excuse to give a false one. Bigler v. Flickinger, 55 Pa. 279. And so it makes much difference whether the parties stand "on an equality." For example, we should treat very differently the expressed opinion of a chemist to a layman about the properties of a composition from the same opinion between chemist and chemist, when the buyer had full opportunity to examine. The reason of the rule lies, we think, in this: There are some kinds of talk which no sensible man takes seriously, and if he does he suffers from his credulity. If we were all scrupulously honest, it would not be so; but, as it is, neither party usually believes what the seller says about his own opinions, and each knows it. Such statements, like the claims of campaign managers before election, are rather designed to allay the suspicion which would attend their absence than to be understood as having any relation to objective truth. It is quite true that they induce a compliant temper in the buyer, but it is by a much more subtle process than through the acceptance of his claims for his wares.

So far as concerns statements of value, the rule is pretty well fixed against the buyer. So. Dev. Co. v. Silva, 125 U. S. 247, 256, 8 Sup. Ct. 881, 31 L. Ed. 678; Gordon v. Butler, 105 U. S. 553, 26 L. Ed. 1166; Lehigh Zinc, etc., Co. v. Bamford, 150 U. S. 665, 14 Sup. Ct.

Digitized by Google

219, 37 L. Ed. 1215. It has been applied more generally to statements of quality and serviceability. Kimball v. Bangs, 144 Mass. 321, 11 N. E. 113; Neidefer v. Chastain, 71 Ind. 363, 36 Am. Rep. 198; Warren v. Doolittle, 61 Ill. 171; Hunter v. McLaughlin, 43 Ind. 38. But this is not always so. Iowa, etc., Co. v. Amer. Heater Co. (C. C.) 32 Fed. 735. As respects the validity of patents it also obtains. Reeves v. Corning (C. C.) 51 Fed. 774; Dillman v. Nedlehoffer, 119 Ill. 567, 7 N. E. 88; Huber v. Guggenheim (C. C.) 89 Fed. 598. Cases of warranty present the same question and have been answered in the same way. Chalmers v. Harding, 17 L. T. (N. S.) 571; Farrow v. Andrews, 69 Ala. 96; Bain v. Withey, 107 Ala. 223;[1] Gaar, etc., Co. v. Halverson, 128 Iowa, 603, 105 N. W. 108; Bartlett v. Hoppock, 34 N. Y. 118, 88 Am. Dec. 428. Contra, Elkins v Kenyon, 34 Wis. 93.

In the case at bar, since the buyer was allowed full opportunity to examine the cleaner and to test it out, we put the parties upon an equality. It seems to us that general statements as to what the cleaner would do, even though consciously false, were not of a kind to be taken literally by the buyer. As between manufacturer and customer, it may not be so; but this was the case of taking over a business, after ample chance to investigate. Such a buyer, who the seller rightly expects will undertake an independent and adequate inquiry into the actual merits of what he gets, has no right to treat as material in his determination statements like these. The standard of honesty permitted by the rule may not be the best; but, as Holmes, J., says in Deming v. Darling, 148 Mass. 504, 20 N. E. 107, 2 L. R. A. 743, the chance that the higgling preparatory to a bargain may be afterwards translated into assurances of quality may perhaps be a set-off to the actual wrong allowed by the rule as it stands. We therefore think that the District Court was right in disregarding all these misrepresentations.

[2, 3] As respects the representation that the cleaners had never been put upon the market or offered for sale, the rule does not apply; nor can we agree that such representations could not have been material to Freeman's decision to accept the contract. The actual test of experience in their sale might well be of critical consequence in his decision to buy the business, and the jury would certainly have the right to accept his statement that his reliance upon these representations was determinative of his final decision. We believe that the facts as disclosed by the depositions of the Western witnesses were sufficient to carry to the jury the question whether those statements were false. It is quite true, as the District Judge said, that the number of sales was small, perhaps not 60 in all; but they were scattered in various parts of the Mountain and Pacific States, and the jury might conclude that they were enough to contradict the detailed statements of Simmons that the machines had been kept off the market altogether.

The Simmons Manufacturing Company insists that there was no evidence that Simmons, who was the only party authorized to speak for that company, knew that the goods had ever been put on sale, and it is quite true that there was no such direct evidence. It is at least arguable whether the evidence was sufficient to allow a jury to

[1] 18 South. 217.

Digitized by Google

say that Simmons had known of these efforts. The results of the sales seem to have come to the knowledge only of the local agents, but we think a jury might say that the fact of their sale and the decision of the agents to sell them might have been authorized by the home office, and that Simmons might have known of both. While, therefore, if the case turned only upon Simmons' knowledge of the failure of the machines upon sale, we should hardly think the evidence sufficient to justify any inference that he did know, yet, since the fraud alleged was of the fact of sale alone, the evidence did not justify a directed verdict. Such a misrepresentation might have been material to Freeman in the execution of the contract, since, if he did learn that they had been on sale, he might well have insisted that the results of those sales should be disclosed before he proceeded. Sweetland's testimony to the contrary only discredits Freeman's statements; it cannot be itself the basis of any recovery.

[4-6] The next question is as to whether any such misrepresentations were conclusively cured by the recital in the contract of purchase as follows:

> "The party of the first part [the Simmons Company] has been engaged in the manufacture of a certain type of vacuum cleaning machines, and the parties of the first and second part [the National Suction Cleaner Company] have been engaged in the sale thereof."

We all agree that an adequate retraction of the false statement before Freeman executed the contract would be a defense. Whether this be regarded as terminating the consequences of the original wrong, or as a correction of it, is of little importance. Further, we agree that, even if Freeman had in fact never learned of the retraction, it would serve, if given under such circumstances as justified the utterer in supposing that he would. For example, a letter actually delivered into his hands containing nothing but a retraction would be a defense, though it abundantly appeared that he had never read it. His loss might still be the consequence, and the reasonable consequence, but for the letter, of the original fraud; but the writer would have gone as far as necessary to correct that fraud, and we should not be disposed to hold it as an insurer that its correction should be effective. Judge WARD and I, however, do not think that such a recital in such a place was certain to catch the eye of the reader, and that therefore neither was the defendant's duty of retraction inevitably discharged, nor, what is nearly the same thing, did the defendant show beyond question that Freeman actually saw it. As a retraction the recital was a defense, and the defendant had the burden of proof. As notice to Freeman actually conveyed, it may have been only evidence upon the causal sequence between the wrong and the injury; but we attach no great significance to that distinction. The fact that he signed the contract appears to us to be some evidence upon which the jury might say that he could not have seen the recital. That depends upon how much importance they think he attached to the original representation, and that depends in turn upon what they thought of his story. If they did believe that the representation was of critical consequence in his decision, they might infer that he did not see it, or he would

Digitized by Google

not have gone on without some explanation. The very silence of the testimony upon the question might be taken to infer that he had not noticed it, even at the trial, just as it might also be taken to indicate that he had fabricated the whole story, and hoped the recital would escape the notice of the defendant. In any event, the interpretation of the whole transaction appears to us not to be so clear that reasonable people might not come to opposite conclusions upon it, and that involves a submission to the jury. It is perhaps of some importance that no allusion to the recital appears in the record.

[7, 8] It results from the foregoing that the judgment in the action for deceit must be reversed. In the action upon the notes the judgment upon the notes will be affirmed, because the Vulcan Metals Company, Incorporated, did not make any offer to return the machines, tools, and patents, which were not shown to be without any value, and consequently it was in no position to rescind. The judgment in that action dismissing the counterclaim must, however, be reversed, since the counterclaim involved the same facts as the complaint in the action for deceit. Flynn's agency appears in this record only by his declarations, and he was not shown to have any authority to speak for the Simmons Company. He was at most only a broker, and as such his representations in the negotiations as to the prior conduct of the Simmons Company touching sales of machines were not within his authority. The same applies upon this record to Barnes, the general counsel of the defendant. The proof of their authority may, of course, be different upon the next trial, as to which we naturally have nothing to say. However, no representations should be allowed as to the efficiency, durability, or economy of the cleaners, and the case should be tried upon the sole issue whether the defendant, through duly authorized agents, represented to Freeman that the goods had not been put on sale when in fact they had, whether this representation was material to Freeman's execution of the contract, whether the insertion of the recital into the contract was all that was reasonably necessary by way of retraction, and, if not, whether Freeman did not actually read it in the contract.

Judgment in the action of deceit reversed, and new trial ordered. Judgment in the action on the notes affirmed so far as it gives judgment on the notes, and reversed so far as it dismisses the counterclaim, and new trial upon the counterclaim ordered.

HOUGH, Circuit Judge (dissenting in part). The one point on which I cannot agree with the majority is the effect of the statement (it makes no difference whether it is called a "recital" or by some other name) contained in a contract which was signed by Freeman before he suffered any loss and at the moment he entered into obligation. The opinion of the court holds that this retraction or correction cannot be judicially held adequate or sufficient to conclude Freeman, if "in fact [he] did not see it." But he never denied seeing it; and the majority holding is in effect that, though signature of contract is admitted, and reading of all of it not denied, yet, in the absence of a specific admission of reading with comprehension, a case was made

Digitized by Google

for the jury, because there is no presumption of reading, or at least of the intelligent reading, of an admittedly signed contract.

A man is held to be bound by a contract because he is presumed to know what it means and says; as the greater includes the less, I should consider him bound to a comprehension of the ordinary meaning of the words employed. The present ruling seems to me but a direction as to how to give evidence upon another trial.

On Petition of Plaintiffs in Error for a Rehearing.

PER CURIAM. We have concluded that the judgment in this action on the notes should be modified, so as to affirm the money judgment in favor of the plaintiff below, and to dismiss (but not upon the merits, as was done below) the counterclaim interposed. This counterclaim is substantially the action for deceit. That it did not constitute a defense was sufficiently set forth in our previous opinion.

[9] Whether the same allegations of fact can be used as a counterclaim is a question that depends upon the construction of section 501, Code Civ. Proc. N. Y. The cause of action is on the contract evidenced by the notes in suit; the counterclaim is in tort, and therefore the question is whether such tort cause of action arises out of the transaction set forth in the complaint or is "connected with the subject of the action." Underlying and governing this question of procedure is the legal fact that this action of deceit presupposes and recognizes a contract valid and enforceable. If there was not such a contract, this particular action of deceit could not exist, and no effort is or can be made in this proceeding to set aside, invalidate, or nullify either the contract evidenced by the notes or the contract out of which the notes arose. That this counterclaim did not, in the language of the statute, arise out of the contract or transaction set forth in the complaint, is too plain for argument; whether it is "connected with the subject of the action" is a question which we resolve in favor of plaintiff below. The question is often difficult, but, as was said in Carpenter v. Manhattan, etc., Co., 93 N. Y. 556, "the counterclaim must have such relation to and connection with the subject of the action that it will be just and equitable that" the controversy be settled in one action. If a more rigid or formal test be looked for, the best is that of reciprocity. Adams v. Schwartz, 137 App. Div. 235, 122 N. Y. Supp. 41, and cases cited.

Making application of this test, could the payees of the notes, when sued in deceit, set up the notes as a proper counterclaim? Certainly not. The action of the lower court in dismissing the counterclaim on the merits naturally followed from its disposition of the action of deceit; the writ of error herein complained of what was done. We sustain the writ only in so far as the counterclaim was dismissed on the merits, modifying the judgment below by striking out those words. The judgment is otherwise affirmed.

LEARNED HAND, District Judge (dissenting). I think the judgment on the notes should be reversed, along with the judgment on the counterclaim, and that both should go back for the new trial.

Digitized by Google

(248 Fed. 897)

EDMONDS v. STERN et al.

(Circuit Court of Appeals, Second Circuit. January 16, 1918.)

No. 92.

1. COPYRIGHTS ⟹12—SUBJECT-MATTER—ORCHESTRAL SCORE FOR COPYRIGHTED SONG.

Where the purchaser of a song, having copyrighted it with the consent of the composer, prepared and copyrighted an orchestral score, the purchaser is entitled to protection of the copyright for the score, as it was substantially a new and independent composition, and represented original work, supporting an independent copyright.

2. COPYRIGHTS ⟹47—ASSIGNMENTS—CONSTRUCTION.

Where defendants copyrighted a song sold to them on a royalty basis, and with the consent of the composer prepared and copyrighted an orchestral score, the composer is not, defendants having assigned to him the copyright of the song in settlement of a controversy between them, entitled to any rights in the orchestral score, which was not assigned; the transaction in its very nature showing an intent not to lessen or change defendants' enjoyment of the score copyrighted.

3. COPYRIGHTS ⟹47—ASSIGNMENTS—RIGHTS IN COPYRIGHTED WORK.

Where the composer of a song sold it to defendants on a royalty basis, and after copyrighting the song they prepared and copyrighted an orchestral score with the composer's consent, the composer is not, by reason of the assignment of the copyright of the song, entitled to any rights in the score, which was not assigned to him; the two copyrights being entirely distinct.

Appeal from the District Court of the United States for the Southern District of New York.

Bill by Shepard N. Edmonds against Joseph W. Stern and Edward B. Marks for infringement of copyright. From the decree, issuing an injunction, without damages, and granting plaintiff's attorney a small fee, both parties appeal. Reversed and remanded, with directions to dismiss the bill.

Plaintiff composed the words and music of a certain song, which he sold to defendants, who copyrighted it in 1903, under a royalty agreement. With plaintiff's knowledge and consent this song was used as part of an operetta, and with like knowledge and consent defendants separately copyrighted an orchestral arrangement or medley of all the music of said operetta, which therefore contained, inter alia, an orchestration of the melody of plaintiff's song. In 1907 defendants, after some difficulty and litigation with plaintiff, and as part of a settlement and compromise thereof, assigned and transferred to plaintiff, his assigns, etc., "the copyright to the following songs [including the song now in question] composed by the said [plaintiff] and copyrighted by us." Some years later, persons employed by and acting on the suggestion of plaintiff or his counsel, bought from defendants a few copies of the orchestral arrangement or medley aforesaid, and endeavored to buy the words and music of the song itself, but without success, being informed that the song had been withdrawn from sale.

This action is upon the copyright of the song, and the infringement alleged is the sale of the above referred to copies of the orchestral arrangement, which, of course, contained no words. The court below held that this was infringement, but that plaintiff had suffered no damage and accordingly issued an injunction without damages, and granted plaintiff's attorney a small counsel fee. Both parties appealed—plaintiff complaining of refusal of damages and the smallness of the counsel fee; defendant, of any fee and the injunction.

⟹For other cases see same topic & KEY-NUMBER in all Key-Numbered Digests & Indexes

Digitized by Google

Fred Francis Weiss, of New York City, for plaintiff.

Cohen & Richter, of New York City (Theodore B. Ritcher, of New York City, of counsel), for defendants.

Before WARD, ROGERS, and HOUGH, Circuit Judges.

HOUGH, Circuit Judge (after stating the facts as above). Whether the act above recited constituted infringement must be decided before any question of damages or fees can be considered.

[1] The separate copyright of the orchestral score has always belonged to defendants, and that they had lawful right to have such arrangement both prepared and copyrighted cannot be denied, nor do we understand it to be contested in this case. Defendants had confessedly acquired the right to make this arrangement, and when made it was "substantially a new and distinct composition, and as such entitled to the protection of the court." Carte v. Evans (C. C.) 27 Fed. 862, and cases cited. Nor is this doctrine at all peculiar to musical works; the propriety of separate and independent copyright always depends upon the presence or absence of original work, as we pointed out in West, etc., Co. v. Edward Thompson Co., 176 Fed. 833, 100 C. C. A. 303.

[2, 3] If, then, defendants had lawful copyright in the orchestral arrangement, it was a piece of property wholly separate and independent from that which they had in the copyright of the song. The plaintiff's knowledge of and acquiescence in what was done renders impossible any consideration of what might have been the case, had the sequence of notes in plaintiff's song melody been used as a basis for a small part of the orchestral score without his consent and approbation. When, in this condition of facts, defendants assigned the song copyright to plaintiff, and did not assign that of the orchestral score when settling and compromising their mutual differences, the transaction by its nature is strong evidence of plaintiff's continued acquiescence and approbation in defendants' ownership and enjoyment of the copyright of the orchestral arrangement.

Thus for two reasons we find no infringement of plaintiff's copyright by what defendants did: (1) There is evidence of intent in both parties not to lessen or change defendants' enjoyment of the score copyright, when plaintiff acquired the rights on which he here depends for recovery; and (2) as matter of law the mere transfer of copyright in the song had no effect whatever on the copyright of the operatic score theretofore taken out. The two things were legally separate, and independent of each other; it makes no difference that such separate and independent existence might to a certain extent have grown out of plaintiff's consent to the incorporation of his melody in the orchestration. When that consent was given, a right of property sprang into existence, not at all affected by the conveyance of any other right.

Thus the facts prevent consideration of the query (dwelt on in the court below) whether as matter of law defendants were without plaintiff's consent, entitled to sell copies of the song printed before the assignment of the copyright in suit. Taylor v. Pillow, L. R. 7 Eq.

Digitized by Google

418; Howitt v. Hall, 6 L. T. Rep. [N. S.] 348; Troitzsch v. Ress, 3 Times Law Rep. 773.

It follows that the decree below must be reversed, and cause remanded, with directions to dismiss the bill. The defendants will recover one bill of costs in this court, as well as costs below.

(248 Fed. 899)

WESTERN UNION TELEGRAPH CO. v. HICKMAN.

(Circuit Court of Appeals, Fourth Circuit. January 3, 1918.)

No. 1547.

1. MASTER AND SERVANT ⟹362—MASTER'S LIABILITY FOR INJURY TO SERVANT—WORKMEN'S COMPENSATION ACT—CONSTRUCTION—"CASUAL EMPLOYMENT."

   Under the Workmen's Compensation Act of West Virginia (Acts 1915, c. 9, as amended by Acts 1915 [Ex. Sess.] c. 1), which exempts from its operation persons in "casual employment," the exemption depends, not on the nature of the work performed, but on the nature of the contract of employment, and one hired for a limited and temporary purpose, though within the scope of the master's business, is within the exception.

2. MASTER AND SERVANT ⟹289(21)—MASTER'S LIABILITY FOR INJURY TO SERVANT—CONTRIBUTORY NEGLIGENCE.

   Where plaintiff, temporarily employed by defendant telegraph company to assist in repairing a portion of its line, was injured by the falling of a pole upon which he had climbed in the course of duty, which was caused by the breaking of the pole where it had become decayed below the surface of the ground, the defect not being apparent by inspection above the ground, plaintiff was not chargeable as matter of law with contributory negligence or assumption of the risk.

In Error to the District Court of the United States for the Northern District of West Virginia, at Parkersburg; Alston G. Dayton, Judge.

Action at law by Charles H. Hickman against the Western Union Telegraph Company. Judgment for plaintiff, and defendant brings error. Affirmed.

Herbert Fitzpatrick, of Huntington, W. Va. (Enslow, Fitzpatrick & Baker, of Huntington, W. Va., on the brief), for plaintiff in error.

V. B. Archer, of Parkersburg, W. Va., for defendant in error.

Before PRITCHARD, KNAPP, and WOODS, Circuit Judges.

KNAPP, Circuit Judge. [1] In this action of negligence plaintiff in error, defendant below, set up in defense and claimed protection under the Workmen's Compensation Act of West Virginia (Acts 1915, c. 9, as amended by Acts 1915 [Ex. Sess.] c. 1) in force when the accident happened. This act, which otherwise would bar the suit, excepts from its provisions "casual employment," and plaintiff can therefore maintain his action if he was engaged in "casual employment" at the time he got hurt. The facts in that regard appear to be these:

⟹For other cases see same topic & KEY-NUMBER in all Key-Numbered Digests & Indexes

Digitized by Google

Plaintiff was about 27 years old when he received the injuries for which he sues. His previous employment had been mainly with telephone companies, and he was an experienced, if not expert, telephone lineman. For a while before the accident he was out of work and looking for something to do. His father, James W. Hickman, an inspector for the defendant company, had been directed to repair its clock circuit in the city of Parkersburg, a job of brief duration and costing only a small sum. Under authority to get a lineman to help him, he hired his son, the plaintiff, for "not over five days," and they began the work. On the morning of the fourth day, a telegraph pole, which plaintiff had climbed to string a wire, broke down under his weight and he was thrown to the ground and severely injured. Was his employment "casual"?

The English Compensation Act, which some of our states have closely followed, excepts "a person whose employment is of a casual nature and who is employed otherwise than for the purpose of the employer's trade or business." Construing this act, the English courts have held that the kind of work done by the employé, rather than duration of service, is the determining factor. If the work pertain to the business of the employer and be within the scope of its purpose, the employment is not "of a casual nature," although the hiring be only for a short period of time. The Connecticut statute (Pub. Acts 1913, c. 138) is practically the same as the English, and accordingly the Supreme Court of that state has held (Thompson v. Twiss, 90 Conn. 444, 97 Atl. 328, L. R. A. 1916E, 506) that the nature of the employment was measured, not by tenure of service, but "by the character of the work." The New Jersey statute likewise exempts those "whose employment is of a casual nature."

But the West Virginia act, in defining exceptions, uses the terms "casual employment" and "persons casually employed." The equivalent exemption of persons "whose employment is but casual" appears in the Compensation Laws of Massachusetts (prior to the amendment of 1914 [St. 1911, c. 751, as amended by St. 1912, c. 571]), Illinois (Laws 1911, p. 315, as amended by Laws 1913, p. 335), Michigan (Pub. Acts [Ex. Sess.] 1912, No. 10), and Minnesota (Gen. St. 1913, §§ 8195–8230). This noticeable departure from the language of the English statute indicates a legislative intent to broaden the exception and place it on a different basis. Its apparent effect is to make exemption depend, not on the nature of the work performed, but on the nature of the contract of employment. If the hiring be incidental or occasional, for a limited and temporary purpose, though within the scope of the master's business, the employment is "casual," and covered by the exception. And so it has been held by the courts of states whose Compensation Acts have substituted "casual employment," or words of the same import, for the "employment of a casual nature," found in the English statute. In re Gaynor, 217 Mass. 86, 104 N. E. 339, L. R. A. 1916A, 363; In re Cheevers, 219 Mass. 244, 106 N. E. 861; Aurora Brewing Co. v. Industrial Board, 277 Ill. 142, 115 N. E. 207; Maryland Casualty Co. v. Pillsbury, 172 Cal. 748, 158 Pac. 1031. Thus, in the Gaynor Case, supra, in which the subject is discussed at

Digitized by Google

length, the court says that "casual" is the antonym of "regular," "systematic," "periodic," and "certain." These decisions, and the convincing reasons on which they rest, warrant the conclusion that plaintiff was engaged in "casual employment" when the accident occurred.

This conclusion finds further support in the so-called insurance feature of the West Virginia statute, under which a compensation fund is created. The premiums which make up this fund are paid by the employers on the basis of their monthly pay rolls, which are certified to the treasurer of the state, and they are authorized to deduct each month from the pay of their employés, excepting persons casually employed, 10 per cent. of the premium paid for that month. But it does not appear, and we do not understand it to be claimed, that Hickman was on defendant's pay roll for the month in which he was injured, or that any deduction from his pay for a few days' service was made or contemplated. In short, taking all the circumstances into account, it seems but reasonable to hold that plaintiff's employment was "casual" within the meaning of the West Virginia act. Certainly, as we think, the defendant was entitled to no more than the submission of the question to the jury, as was done, and their finding on that issue must be accepted as conclusive.

[2] The defenses of contributory negligence and assumption of risk may be disposed of without extended comment. There was testimony from which the jury might find that the pole which broke appeared to be in sound condition; that plaintiff looked at it before ascending, and observed nothing to suggest that it could not be climbed with safety; that it broke below the surface of the ground, where it was rotten and decayed; that discovery of this subsurface condition required the use of certain tools with which plaintiff had not been provided; that proper inspection would have disclosed the defect; that defendant employed inspectors and had some system of inspection of its clock circuit, but had not inspected the pole in question for at least a number of years; that it was necessary for plaintiff to climb this pole in doing the work for which he was hired; and that he was acting with reasonable care and prudence when the accident happened. This was sufficient, in our judgment, to take the case to the jury, and the refusal of the court to direct a verdict for defendant, on the grounds here referred to, is sustained by numerous authorities. Western Union Tel. Co. v. Tracy, 114 Fed. 282, 52 C. C. A. 168; Britton v. Telephone Co., 131 Fed. 844, 65 C. C. A. 598; Munroe v. Ley & Co., 156 Fed. 468, 84 C. C. A. 278; Jackson Fibre Co. v. Meadows, 159 Fed. 110, 86 C. C. A. 300; Bush v. Cin. Trac. Co., 192 Fed. 241, 112 C. C. A. 499; Heckert v. Central D. & P. T. Co., 218 Fed. 29, 134 C. C. A. 43; Perry v. Electric Ry. Co., 72 W. Va. 282, 78 S. E. 692, L. R. A. 1916D, 962; Corby v. Telephone Co., 231 Mo. 417, 132 S. W. 712; Hulse v. Home Telephone Co., 164 Mo. App. 126, 147 S. W. 1124; McGuire v. Bell Telephone Co., 167 N. Y. 208, 60 N. E. 433, 52 L. R. A. 437; Southern Bell Tel. Co. v. Clements, 98 Va. 1, 34 S. E. 951.

We have carefully examined the various assignments of error which are based upon instructions to the jury, both those given and those refused, but find none of them of sufficient merit to require discussion.

Digitized by Google

Taking the charge as a whole, the case was fairly and correctly submitted, and no sufficient reason appears for disturbing the judgment. Affirmed.

(248 Fed. 902)

DOSSET v. UNITED STATES.

(Circuit Court of Appeals, Eighth Circuit. February 11, 1918.)

No. 4873.

1. INDIANS ⟹38(4)—INTRODUCTION OF INTOXICATING LIQUOR INTO INDIAN TERRITORY—INDICTMENT.

In view of Rev. St. § 1025 (Comp. St. 1916, § 1691), declaring that no indictment shall be deemed insufficient by reason of any defect or imperfection in the matter of form only, an indictment charging that accused, "in the county of Jefferson, state of Oklahoma, in the district and within the jurisdiction of said court, did * * * unlawfully, knowingly, willfully, and feloniously introduce and carry into the county and district from without the state of Oklahoma * * * intoxicating liquor, * * * the portion of the county and district into which the liquor was so introduced having been within the limits of the Indian Territory and a part thereof prior to admission," must be deemed sufficient to charge the offense of introducing from without intoxicating liquor into that portion of the state of Oklahoma which was formerly the Indian Territory, for, while the indictment was subject to criticism as to form, it was sufficient to advise accused of the offense with which he was charged, and in event of conviction would have supported a plea of former jeopardy.

2. CRIMINAL LAW ⟹822(18)—INSTRUCTIONS—CONSTRUED AS A WHOLE—IGNORING DEFENSE.

In a prosecution for introducing intoxicating liquors from without into that part of the state of Oklahoma formerly the Indian Territory, where defendant, who, with companions, motored into the state, claimed that liquor which he placed in the car was consumed before the state line was reached, and that the liquor found was placed in the machine by others, a charge that only that found in the state of Oklahoma should be considered could not, in view of the other charges, be deemed to have taken the defense from the jury.

3. CRIMINAL LAW ⟹829(1)—INSTRUCTIONS COVERED BY CHARGE.

The refusal of a requested charge, fully and accurately covered by the general charge, is proper.

4. CRIMINAL LAW ⟹811(4)—INSTRUCTIONS EMPHASIZING PARTICULAR MATTER.

A charge on reasonable doubt, which singled out and emphasized a particular matter, though it was not vital to the case, was properly refused.

In Error to the District Court of the United States for the Eastern District of Oklahoma; Ralph E. Campbell, Judge.

Bill Dosset was convicted of the offense of carrying liquor from a point outside the state of Oklahoma into that part of the state which prior to statehood was part of the Indian Territory, and he brings error. Affirmed.

F. E. Riddle, of Tulsa, Okl. (Harry Hammerly, of Chickasha, Okl., on the brief), for plaintiff in error.

Archibald Bonds, Sp. Asst. U. S. Atty., of Muskogee, Okl. (W. P. McGinnis, U. S. Atty., of Muskogee, Okl., on the brief), for the United States.

Digitized by Google

Before SANBORN and CARLAND, Circuit Judges, and BOOTH, District Judge.

BOOTH, District Judge. Dossett, defendant below, was convicted of the offense of carrying liquor from a point outside the state of Oklahoma into that part of the state which prior to statehood was a part of the Indian Territory. The case is here on writ of error, and counsel for defendant urge for consideration the following assignments of error:

No. 3. Refusal by the court below to give certain requested instructions to the jury.

No. 2. Giving by the court below that part of the charge to which specific objection was taken.

No. 4. Overruling the demurrer to the indictment.

These assignments will be taken up in reverse order.

[1] The demurrer interposed contained the following grounds:

(1) "That said indictment is insufficient, and fails to allege facts showing that defendant is guilty of violating any of the laws of the United States."

(2) "That said indictment fails to allege facts sufficient to show that defendant has been guilty of introducing intoxicating liquors into the Indian country within the purview of the act of Congress."

The indictment contains the following language:

"That one Bill Dosset, on the 13th day of August, A. D. 1916, in the county of Jefferson, state of Oklahoma, in the said district and within the jurisdiction of said court, did at the time and place aforesaid, unlawfully, knowingly, willfully, and feloniously introduce and carry into the county and district aforesaid, from without the said state of Oklahoma, one quart of vinous, malt, fermented, and intoxicating liquor, to wit, whisky and beer; the portion of said county and district into which the said liquor was so introduced having been within the limits of the Indian Territory, and a part thereof, prior to the admission of the said state of Oklahoma into the Union as one of the United States of America."

Counsel for defendant in their brief say:

"The language of the indictment to which we directed the demurrer is as follows: 'The portion of said county and district into which the said liquor was so introduced having been within the limits of the Indian Territory and a part thereof prior to the admission of the state of Oklahoma into the Union.' "

And again counsel say:

"It is our contention that the indictment only by inference alleges that the place where the intoxicating liquors were introduced was formerly a portion of the Indian Territory."

We agree with counsel that the indictment is subject to criticism as to form; but defective form does not necessarily render an indictment insufficient. If the indictment contains every element of the offense intended to be charged; if it charges all the facts necessary to enable the defendant to prepare for his defense, and to plead former jeopardy in case he is again indicted for the offense after an acquittal or conviction on the present indictment; if the facts are stated, so that the court may determine whether, if proven, they would constitute in law the offense charged—the indictment will be sufficient, even though it may be defective as to grammar, and even though some element of

Digitized by Google

the offense is stated loosely and without technical accuracy. R. S. U. S. § 1025 (Comp. St. U. S. 1916, § 1691); Coffin v. U. S., 162 U. S. 664, 16 Sup. Ct. 943, 40 L. Ed. 1109; Harper v. U. S., 170 Fed. 385, 95 C. C. A. 555; Horn v. U. S., 182 Fed. 721, 105 C. C. A. 163; Morris v. U. S., 229 Fed. 516, 143 C. C. A. 584. The indictment in the case at bar was sufficient under the tests stated.

[2] The part of the court's charge to which assignment of error No. 2 relates is as follows:

"Now, the only liquor involved in this case is the liquor which the officers say they found in the car after it crossed the river and when the arrest was made."

The objection made is that this charge practically "excluded the defendant's theory, as well as his testimony." Apparently the defendant's theory, which was supported to some extent by the testimony of the defendant, was that the defendant did put into the automobile in which defendant and his companions made their trip a sack containing beer, but that this beer was all consumed before reaching the state line of Oklahoma, and that the other sack containing the whisky, which was seized by the officers after crossing the line, was placed in the automobile, not by the defendant, but by one of the other occupants of the car. The part of the charge of the court above given must be read in connection with the other portions of the charge immediately accompanying it, and when so read it cannot fairly be said either to have excluded the defendant's theory or the defendant's evidence. The particular portion of the charge mentioned was intended to exclude from the consideration of the jury the question whether the carrying of the beer to the line, or near the line, of Oklahoma, would constitute an offense. The court charged that it would not, and that the only liquor they were to consider as liable to convict defendant was the whisky which was carried across the line. Construed fairly, and in connection with the other parts of the charge, this particular part was in defendant's favor, rather than against him.

[3, 4] Assignment No. 3 covers two instructions requested by defendant and refused by the court. They are as follows:

"You are instructed that under the evidence in this case the court is of the opinion that the same is insufficient to sustain a conviction against the defendant, and you are advised it would be your duty to return a verdict in his favor. * * * You are instructed that if you have a reasonable doubt whether or not the defendant placed the whisky in the car, or caused the same to be placed therein, in which the defendant was riding, then, under the law, you must resolve said doubt in favor of the defendant."

The first of these instructions raises the question whether there was substantial evidence to sustain a verdict and judgment of guilty. It would serve no useful purpose to discuss the testimony of the several witnesses. A careful examination has led us to the conclusion that, though the evidence was conflicting, there was substantial and sufficient evidence to sustain a verdict of guilty. The requested instruction was rightly refused. The requested particular charge on the subject of reasonable doubt was properly refused: First, because the court had fully and accurately covered the matter in the general charge; and, secondly, because the requested charge was misleading,

Digitized by Google

in that it singled out one matter to which the jury was told to apply the rule of reasonable doubt, namely, the placing of the whisky in the car, thereby unduly emphasizing this particular matter, though it was not a matter vital to the case.

Judgment below is affirmed.

(248 Fed. 905)

GRAND TRUNK WESTERN RY. CO. v. UNITED STATES.

(Circuit Court of Appeals, Sixth Circuit. April 2, 1918.)

No. 3088.

1. CARRIERS ⟹37—CARRIAGE OF LIVE STOCK—TWENTY-EIGHT HOUR LAW.
Under the Twenty-Eight Hour Law (Act June 29, 1906, c. 3594, 34 Stat. 607 [Comp. St. 1916, §§ 8651–8654]), forbidding the confinement of shipments of live stock for more than 28 consecutive hours, but allowing shippers to extend the time of confinement to 36 hours, it is the established rule that the time during which a shipment of live stock is confined by a connecting carrier shall be included in the statutory period.

2. CARRIERS ⟹37—TWENTY-EIGHT HOUR LAW—VIOLATIONS.
Under the Twenty-Eight Hour Law, forbidding the confinement without unloading of shipments of cattle or of live stock for more than 28 consecutive hours, but authorizing the shipper to extend the period for 36 hours, defendant railroad company, which received a shipment of cattle originating in Canada, which the owner had consented should be confined for 36 hours, is guilty of a violation of the act, where it confined animals after receipt in the United States for a period which, added to the time they had been confined in Canada, exceeded 36 hours, for the purpose of the act was to prevent cruelty to animals, as well as to prevent impairment of their food value by reason of their excessive confinement, and so it is applicable to shipments originating in Canada, where in the course of interstate commerce they are brought into the United States.

In Error to the District Court of the United States for the Eastern District of Michigan; Arthur J. Tuttle, Judge.

Action by the United States against the Grand Trunk Western Railway Company for a violation of the Twenty-Eight Hour Law. There was a judgment for the United States, and defendant brings error. Affirmed.

Harrison Geer, of Detroit, Mich. (W. K. Williams, of Detroit, Mich., of counsel), for plaintiff in error.

John E. Kinnane, U. S. Atty., of Detroit, Mich., Wm. M. Williams, Solicitor of Dept. of Agriculture, of Montgomery, Ala., J. Edward Bland, Asst. U. S. Atty., of Detroit, Mich., and J. L. Carr, of Washington, D. C., for the United States.

Before KNAPPEN and DENISON, Circuit Judges, and SATER, District Judge.

KNAPPEN, Circuit Judge. This action is brought by the United States under the Twenty-Eight Hour Law, so called (34 Stat. c. 3594, U. S. Comp. Stat. 1916, § 8651 and following). The defendant (plaintiff in error here) is a railroad corporation engaged in interstate com-

---

⟹For other cases see same topic & KEY-NUMBER in all Key-Numbered Digests & Indexes

Digitized by Google

merce by railroad, its road extending from Port Huron, Mich., to Chicago, Ill. It is a part of the Grand Trunk Railway System, so called. The shipment in question, which consisted of three carloads of cattle, originated in West Toronto, Ont., with destination at Chicago, by way of the Grand Trunk Railway of Canada from West Toronto to Sarnia, Ont., from the latter place to Port Huron by way of the St. Clair Tunnel Company, and from Port Huron to Chicago by defendant's own line.

The time of confinement was, at the owner's request, extended to 36 hours. When the cars reached Port Huron the cattle already had been confined 26 hours and 15 minutes; they were detained at Port Huron 13 hours and 25 minutes more. The 36 hours had thus not elapsed when the cattle reached Michigan, but they were actually detained in that state for 3 hours and 40 minutes after the lapse of the permitted 36-hour period.

[1, 2] The trial court directed verdict for the government. The only controversy here arises over defendant's contention that the statute does not apply to a shipment from the Dominion of Canada into the United States unless there was a confinement within the United States alone beyond the time permitted by the statute. The argument is that the act, as shown, not only by its terms, but by its title, confines the prohibition of confinement to live stock, "shipped from one state or territory, or the District of Columbia, into or through another such state or territory or the District of Columbia for a longer period than 28 hours without unloading," etc.; that "no mention is made of confinement of shipments originating within the Dominion of Canada and moving into the United States"; that "a province of the Dominion of Canada is obviously neither a state, territory, nor the District of Columbia"; and that the act thus cannot be made to cover the confinement of live stock during transit within the Dominion of Canada when the shipment originated there.

We cannot agree with this contention. The statute (Comp. St. 1916, § 8651) omitting words inapplicable here, provides that:

> "No railroad * * * whose road forms any part of a line of road over which cattle * * * or other animals * * * shall be conveyed from one state * * * into or through another state * * * shall confine the same in cars * * * for a period longer than 28 consecutive hours without unloading the same in a humane manner, into properly equipped pens for rest, water, and feeding, for a period of at least five consecutive hours, unless prevented by" [conditions not existing here].

A provision for extension of time of confinement to 36 hours follows.

The statute plainly applies to the cattle in question, for defendants were engaged in interstate commerce, and the cattle were in course of interstate transportation, viz. from Michigan to Illinois. It is the established rule, generally, that the time during which cattle have been confined by a connecting carrier shall be included in the computation of the period of statutory confinement. 25 Op. Atty. Gen. 411 (Op. of Atty. Gen.—later Mr. Justice—Moody); N. Y. C., etc., R. R. Co. v. United States (C. C. A. 2) 203 Fed. 953, 122 C. C. A. 255.

Digitized by Google

The intention of the act, as indicated by its title, is to "prevent cruelty to animals in transit." B. & O. S. W. R. R. Co. v. United States, 220 U. S. 94, 106, 31 Sup. Ct. 368, 55 L. Ed. 384. It also has in view the protection of the public in preventing "injury to the public health from the sale of cattle for food made ill and feverish by hunger, thirst, and exhaustion." United States v. Lehigh Valley R. R. Co. (C. C.) 184 Fed. 971, 973; United States v. Pere Marquette R. R. Co. (C. C.) 171 Fed. 586, 588. As applied to this case, the substantive offense is not the carrying of the cattle in Canada, but their detention in the United States for such time as makes a total continuous confinement in excess of the statutory period. The act is thus violated in spite of the fact that a part of the confinement necessary to make up the statutory period had occurred in Canada. United States v. Lehigh Valley R. R. Co., supra; s. c. 187 Fed. 1006, 109 C. C. A. 211; Grand Trunk Railway of Canada v. United States (C. C. A. 2) 191 Fed. 803, 112 C. C. A. 317; Grand Trunk Ry. Co. v. United States (C. C. A. 7) 229 Fed. 116, 143 C. C. A. 392, Ann. Cas. 1917B, 1094.

In United States v. Lehigh Valley, supra (where the judgment below was affirmed by the Circuit Court of Appeals of the Second Circuit on the opinion of the District Judge), the shipment originated in the United States, passed through Canada, and then again into the United States; part of the previous confinement being in the United States and part in Canada. The excess was again in the United States; an offense was held to have been committed, Judge Holt saying (184 Fed. 976):

> "It is, of course, true that their confinement in New York would not have constituted an offense without their previous confinement, part of which was in Canada; but the previous confinement in Canada or elsewhere is not a part of the offense, although a fact necessary to its existence."

In the Grand Trunk Railway Case, passed upon by the Circuit Court of Appeals for the Seventh Circuit, the shipment (as in this case) originated in Canada, and part of the confinement occurred there. The excessive confinement was in the United States, and this confinement was held to be within the prohibition of the act. That case differs from the instant case only in the fact that there the destination was also in Canada. The underlying principle, however, is the same.

The Grand Trunk Railway Case passed upon by the Circuit Court of Appeals of the Second Circuit (above cited) is equally in point. There the shipment originated in Michigan; it was delivered by the initial carrier to the defendant at Port Huron, in that state, after a confinement of 16 hours. The cattle were then carried by defendant through Canada to Black Rock, N. Y., where they were delivered to another railroad company, 33 hours later. The confinement by the defendant in the United States was but one hour, and it is evident that there was no unlawful confinement, but for the period occupied in transporting the cattle through Canada. The defendant there, as here, contended that its action in the confinement of the cattle for a longer period than 28 hours in Canada should not be considered. This contention was rejected, Judge Coxe saying:

Digitized by Google

"When the defendant brought the animals into the United States they had been for 49 hours without food, water, or rest, in violation of the statute. When the car entered the United States, the acts forbidden by the law had been committed, and this situation was continued by the defendant for the period of an hour. In other words, the defendant violated the law *and continued the violation while in the United States.*" (Italics ours.)

The fact that in the instant case the shipment originated in Canada does not distinguish it in principle from the three cases last cited.

It is thus clear, on both principle and authority, that the District Court rightly held that defendant's confinement of the cattle in the United States for such period as, added to their confinement in Canada, made a total, continuous confinement in excess of the statutory period, constituted a violation of the act.

The judgment of the District Court is affirmed.

(248 Fed. 908)

In re FEDERAL LIFE INS. CO.

(Circuit Court of Appeals, Seventh Circuit. March 11, 1918.)

No. 2567.

1. EXCEPTIONS, BILL OF ⟹41(2)—PRESENTATION.
   Where defendant's counsel, who prepared a bill of exceptions, took it to the court's chambers after plaintiff's counsel had made objection to the insertion of a typewritten copy of the insurance policy involved, and the court, in the presence of opposing counsel, observed the necessity of inserting a photographic copy, the bill, in view of the informality of such proceedings, must be deemed to have been presented at that time.

2. EXCEPTIONS, BILL OF ⟹41(2)—DILIGENCE IN PRESENTATION.
   Defendant's counsel, having presented a bill of exceptions during the term, *held*, under the circumstances, not to have been guilty of neglect, though the bill of exceptions, as changed, was not again presented during such term, because of the intervening summer recess and inability of defendant's counsel to serve same on counsel for plaintiff.

3. EXCEPTIONS, BILL OF ⟹53(3)—SETTLEMENT—SIGNING—MANDAMUS.
   Where the bill of exceptions was presented during the term, and no unjustifiable delay on the part of the moving party appeared, and the only objection to settlement was that the bill was not timely presented, the moving party is entitled to a writ of mandamus directing the signing of the bill.

Application to the District Court of the United States for the District of Indiana.

Application by the Federal Life Insurance Company for an alternative writ of mandamus to compel the settlement of a bill of exceptions. Writ directed to be issued.

The real controversy herein arises over the inability of counsel to agree upon what constitutes a presentation to the court of the bill of exceptions. The action was tried in the lower court in May, 1917, and resulted in judgment for defendant in error, herein called plaintiff. On June 29th defendant presented its proposed bill of exceptions to opposing counsel, and on June 30th called to get it, that the same might be presented to the judge, who was shortly thereafter to take his summer vacation. On this day plaintiff's

---

⟹For other cases see same topic & KEY-NUMBER in all Key-Numbered Digests & Indexes

Digitized by Google

counsel objected to the bill as proposed, because a typewritten copy of the insurance policy appeared therein, whereas a photographic copy was desired. Defendant's counsel took the proposed bill to the court's chambers, to which place plaintiff's counsel was called and shortly thereafter appeared. There were present the judge and the opposing attorneys. The writ of error was allowed, the bond fixed and approved, and the bill of exceptions was discussed. These facts are not disputed. The difference between the parties as to just what took place centers around this discussion. Accepting the view most favorable to plaintiff, it appears that the court was advised as to plaintiff's demand that a photographic copy be inserted, and expressed the opinion that such a copy be inserted in place of the typewritten copy.

The bill of exceptions was then in the possession of defendant's counsel, but it is claimed such bill was not shown to the court, nor was the judge asked to sign it, nor were there any words spoken indicating that counsel was formally demanding of the judge that he sign the bill. In fact, the judge did not know that the proposed bill of exceptions was physically present and then in the possession of the defendant's counsel. In accordance with the court's direction, defendant secured a photographic copy of the insurance policy, inserted it, and delivered it to the clerk of the court, to assist that official in preparing the record. The clerk completed the transcript shortly before September 1st, and on that day defendant's counsel endeavored to serve it upon plaintiff's attorney. Several attempts were thus made to give the opposing counsel the transcript, but not until October 16th was the copy left in the office of plaintiff's attorney. On October 18th the matter was discussed by opposing counsel, and an additional objection was made to the appearance of exceptions to adverse rulings on admission of evidence. The controversy in reference to these exceptions arose through defendant's counsel's assumption that exceptions of this character, when proper objections had been made, followed as a matter of course, and it was further claimed that an understanding had been reached in this case at the opening of the trial, whereby the requirement of formal exceptions to the rulings on evidence was waived. The local attorney who had charge of the settlement of the bill of exceptions wrote the trial lawyer at St. Louis concerning this objection. Defendant's counsel at St. Louis was out of the city, and required to attend the United States Supreme Court, and was unable to take up the matter with the judge at once, but asked local counsel to ascertain if the court recalled the understanding as to noting exceptions. No such understanding was recalled by the judge, and he refused to allow such exceptions, unless formally made. Counsel at St. Louis was immediately notified, and he sought the possession of the bill of exceptions to correct it; but the clerk would not allow it to be taken from his office. On November 16th defendant's local attorney, as well as the counsel from St. Louis, appeared in Indianapolis to take up the matter with the trial judge and opposing counsel, but found the court busy and the opposing counsel about to leave the city.

The exceptions to rulings on evidence were stricken out, and on a later date, agreeable to parties, the bill was presented to the court. After several hearings, upon one of which oral testimony was taken, the judge refused to sign the bill of exceptions for the reason that the same had not been presented during the term of court at which the action was tried, and which term expired November 5, 1917. No objection to the bill as presented is made, excepting that it was not seasonably presented to the court for settlement and allowance. The bill was duly filed with the clerk October 18th.

Mr. Sullivan, for petitioner.
Frank Dailey, of Bluffton, Ind., for respondent.

Before BAKER, ALSCHULER, and EVANS, Circuit Judges.

EVAN A. EVANS, Circuit Judge (after stating the facts as above). Was the bill of exceptions presented to the court on June 30th? If so, was the defendant guilty of neglect after that date in failing to get

Digitized by Google

its bill settled before November 5th? The answers to these two questions dispose of the petition before us.

[1] That there are authorities holding such transaction as occurred in the judge's chambers on June 30th was not a presentation of the bill of exceptions must be conceded. They are not, however, persuasive, and seem to emphasize form rather than substance. The settlement of a bill of exceptions ordinarily involves much informality. Wherever a dispute arises, the court and opposing attorneys generally indulge in informal discussion, in order that all may accurately recall the occurrences on the trial. Usually no stenographer attends such a hearing, and no record of the proceedings is preserved. None is required.

In this case it is inconceivable that plaintiff's counsel could have failed to understand the purpose for which he was called to the judge's chambers on June 30th. There was no dispute between the parties as to the allowance of the writ of error, nor of the amount of bond, nor the responsibility of the surety. Plaintiff's counsel called on the defendant's counsel on the 29th to submit the proposed bill of exceptions, and on June 30th to secure it for the sole and only purpose of having it settled. No objection to the proposed bill as presented was made, other than the one indicated. The discussion between the attorneys and the observation of the court as to the necessity of supplying a photographic copy in place of the typewritten copy of the insurance policy is explainable upon no other theory than that the attorneys were discussing the settlement of the bill of exceptions. The observation of the court, though informal, was in substance a ruling upon the sufficiency of the bill of exceptions that contained the typewritten copy. Such a ruling, made in reference to the settlement of a bill under such circumstances, presupposes a presentation by the moving party. We do not think it at all necessary that the paper be formally and physically presented to the court, nor a formal written motion made asking the court to sign and settle the same.

Where counsel on both sides understand what the bill of exceptions contains, and there is a single objection made, no dispute between counsel as to the facts occurring, and the court is advised as to the claims of opposing counsel and rules that a photographic copy of an exhibit be supplied in place of a typewritten copy, we conclude that there has been a presentation. Morehead v. Adams, 18 Neb. 569, 26 N. W. 242.

[2] After June 30th we do not believe the defendant was guilty of any want of diligence. The summer recess occurred shortly after this presentation, and it appears that attorneys as well as the judge took a vacation. True, there was ample time after the judge returned, and before November 5th, in which the bill might have been again presented; but the record shows several attempts to present the proposed bill, with the photographic copy of the policy inserted, to plaintiff's attorneys. When the objection to the appearance of exceptions to rulings on evidence was made (October 18th), a new question arose, which required correspondence with the attorney at St. Louis. Such delay as occurred after October 18th was occasioned by this objection. We conclude defendant was not guilty of neglect.

Digitized by Google

[3] The bill having been presented during the term, and no subsequent unjustifiable delay on the part of the moving party appearing, and there being no objection to the settlement of the bill of exceptions, save that it was not timely presented, petitioner is entitled to the writ directing the signing of a bill of exceptions. Chateaugay Iron Co., Petitioner, 128 U. S. 544, 9 Sup. Ct. 150, 32 L. Ed. 508; Hollon Parker, Petitioner, 131 U. S. 221, 9 Sup. Ct. 708, 33 L. Ed. 123.

We do not anticipate that there will be any occasion for the actual issue of a writ of peremptory mandamus; but, should it become necessary to do so in order to secure the rights of the petitioner, his counsel may move for the writ at any time.

The present order will be: Petitioner entitled to writ of mandamus to the District Judge to sign the bill of exceptions tendered by petitioner, and as of the 30th day of June, A. D. 1917.

(248 Fed. 911)

MAYER v. A. & H. G. MUTSCHLER et al.

(Circuit Court of Appeals, Second Circuit. February 14, 1918.)

No. 132.

1. PATENTS ⟹101—CLAIMS—CONSTRUCTION.
One claim, or set of claims, cannot be helped out by judicial incorporation therein of other claims, or parts thereof, in the patent application.

2. PATENTS ⟹42—INVENTION—WHAT CONSTITUTES.
Whether it is patentable novelty to change the old parts of a well-known machine depends on whether the result is new or merely an improvement.

3. EVIDENCE ⟹584(3)—WEIGHT AND SUFFICIENCY—REASONABLE DOUBT.
Certainty beyond a reasonable doubt is reached by quality of evidence, and testimony of one witness may suffice, if the surrounding circumstances are confirmatory.

4. PATENTS ⟹328—VALIDITY—PRIOR USE.
The Mayer patent, No. 1,043,021, for a machine for coating paper, mainly adapted for coating paper with carbon, etc., *held* invalid, for prior public use.

5. PATENTS ⟹76—VALIDITY—PRIOR USE.
An inventor's sale of even one experimental machine is a disclosure to the public of the invention which is a defense to an action for infringement of the patent.

6. PATENTS ⟹76—VALIDITY—PRIOR USE—SALES.
Though an inventor transferred by formal bill of sale an experimental machine, merely for the purpose of defeating his creditors, he cannot, where a patent subsequently issued was questioned on the ground of prior use, contend, for the purpose of defeating the rights of the public, that the bill of sale was in reality a mortgage.

Appeal from the District Court of the United States for the Western District of New York.

Suit by Charles W. Mayer against A. & H. G. Mutschler and others. From a decree (237 Fed. 654) for complainant, defendants appeal. Reversed and remanded, with directions.

The action is on claims 1 to 4, 7, 8, 14, 15, and 47 to 49, of patent to plaintiff, No. 1,043,021, applied for November 24, 1911, and issued October 29, 1912, for a "coating machine." The specification covers, as do the very numerous

---

⟹For other cases see same topic & KEY-NUMBER in all Key-Numbered Digests & Indexes

Digitized by Google

claims, all the parts of a cumbrous and extended, rather than complicated, mechanism for surfacing paper with materials applied in fluid condition, so as to produce what is called "carbon," or "waxed," or "photographic," papers. In a general, but wholly true, sense, this art, which was far from new in 1911, consists in unwinding paper from a roll, leading it over guides and under suitable tension to a roller, whose periphery is partly immersed in whatever is to be applied to the paper, and thence past and over other guides, scrapers, and rollers hot or cold, as desired, until the finished product is rewound on the last roll. What is applied to the paper is "dope," and scrapers are also called equalizers, as they not only remove superfluous "dope," but (in some forms at all events) produce a more equal or even distribution of the proper quantum thereof. Paper may be thus coated on one or both sides; the latter process requiring two "dope" or "coating" rollers and other duplications of process.

The machine of the patent and that of defendants are of the above general type, which is old and open to the public. After the paper is coated, there is an obviously natural tendency to crease or rumple; and smoothing rolls have long been used to counteract that inclination. The appearance and perhaps nature of the coating is affected by the application of heat or cold, or (perhaps) mere exposure to the air at workroom temperature. Thus, if the hot fluid that stuck to the paper as it passed through the "dope" is speedily chilled, it will not soak in as much as if kept warm, and will have a "gloss," instead of a "dead finish," and the quality or appearance of finish may be changed by differing forms of scrapers or equalizers; e. g., a striated circular revolving equalizer will remove superfluities, so will a knife edge, but the appearance of the coated papers will not be the same.

These and many other details of manufacture, and possibilities of variance in product, the specification deals with. For the purposes of this case, it suffices to say that plaintiff discloses a peculiar form of equalizer which defendants do not use, and then points out "that the special and precise positions of the dope roll, the equalizing bar and the releveling or smoothing roll is of special importance in a machine of the present type. The coated paper, while still hot from the coating roll, passes immediately and directly to the equalizing bar without coming in contact with any other object. * * * Then, before the paper with its coating has time to chill, it is brought into engagement with the smoothing roll, which acts on it to produce the desired surface"—i. e., it is hot or cold, as desired. But nowhere does the specification give any information as to how near or far apart rolls and equalizer should be, nor are the words "immediately" and "directly" translated into feet or inches, nor is the idea expressed in terms of the size of, or speed of travel of, the paper web.

Of the claims in suit, Nos. 1 to 4 cover, in language varying but little, the disclosure above outlined. The first is as follows:

"1. A machine for coating paper, comprising means for feeding paper under tension, means for coating the paper as it is fed, an equalizing device adjacent said coating means arranged to receive the paper therefrom before it touches another object, and a roll for releveling and smoothing the paper arranged to receive the paper web directly from the equalizing device, said roll being arranged adjacent said equalizing device."

Nos. 7, 8, 14, and 15 add to the idea of adjacency that of adjustability of the equalizer with reference to that which is adjacent. The fourteenth is perhaps the broadest, and is as follows:

"14. A paper coating machine, comprising a coating roller, means for feeding a paper web in contact therewith, an equalizing bar adjacent said roller in position to receive the paper directly therefrom before it contacts with another body, and means for adjusting said bar to vary its relation to the coating roller."

Nos. 47 to 49 make no reference to any new adjacency of parts, nor the adjustability of any part, and are an attempted summary of the whole apparatus, or its method of working. The forty-eighth is typical, and is as follows:

"48. A paper coating machine, comprising a frame, coating mechanism mounted therein, tension rollers for continuously feeding the paper, and a

Digitized by Google

separate winding roll receiving the paper from said tension rollers, said winding roll having a relatively light friction drive for the purpose stated."

The alleged infringement is a machine, with a similar coating roll (which any one can use), the scraper or knife of the prior art, and a smoothing roll which as matter of fact has been "run neutral"—i. e., without either heating or cooling, but is obviously so made that heat or cold might be applied by the use of long-known apparatus. The fact seems to be that plaintiff's disclosure describes what is wanted to make carbon paper for (e. g.) typewriters, while defendants' machine has been actually used in producing waxed paper wherein to wrap bread. If defendants wanted to make carbon, we see no reason why their smoothing roll could not be changed to suit by any competent mechanic.

The two rolls and scraper of defendants are quite close together, we assume as nearly juxtaposed as in machines made by plaintiff and said to embody his patent; but, as above pointed out, it is impossible to discover from the specification the measurements of such juxtaposition. In defendants' apparatus, however, the paper ribbon is touched on its way from dope roll to scraper by an idler roll, which plaintiff insists has no function but to create an appearance of noninfringement. We find, however, that it (being adjustable) regulates the touch of paper to dope roll, making it light or heavier as desired. Nevertheless it is true that the lead of the paper could easily be governed in other ways, and such interposition of an adjustable idler roll could be avoided by the exercise of quite simple mechanical skill, if and whenever the machine owner wanted to do away with it.

Overruling, not only the usual defenses of anticipation and lack of patentable invention, but several alleged prior uses as to which the testimony was largely taken by deposition, the trial court found infringement of all the claims in suit.

G. Willard Rich, of Rochester, N. Y., for appellants.

Eugene L. Dominick, of Buffalo, N. Y., for appellee.

Before WARD, ROGERS, and HOUGH, Circuit Judges.

HOUGH, Circuit Judge (after stating the facts as above). [1] Claims 47–49 seem to us to have been recognized as valid by inadvertence, for as to them we agree with plaintiff's very distinguished expert, who frankly said that, since the relative positioning of rolls and equalizer was not made a positive element in these claims, "some of the references of the prior art read directly on" them, unless the court could "read into" them the relative positioning aforesaid as "producing a definite result." We know no method by which one claim or set of claims can be helped out, by judicial incorporation therein of other claims or any part thereof; nor in this instance is it doubtful that the subject-matter of 47–49 is quite different from that of the others in suit. Since they are proved as anticipated by plaintiff's own evidence, we need pursue the matter no further.

[2] As to the other claims, we cannot doubt, nor is it denied, that whatever inventive thought is in them lies in bringing nearer together the coating and smoothing rolls, and interposing a scraper into that minimized space. How much nearer these old tools of many prior art machines were brought by Mayer we cannot know from the specification; and this implied criticism on the sufficiency of the disclosure is sought to be avoided by saying (as do plaintiff's expert and counsel) that what the patentee did was to abolish the "cold zone" —i. e., the distance between edge of dope pan and axis of smoothing roll—by reducing said distance to about 11 inches, thereby ironing out

Digitized by Google

(so to speak) the coated paper before, either by atmospheric exposure or contact with other rollers, any substantial change could take place in the physical or chemical condition of what had been applied to the paper. "Cold zone" is one of those advertising phrases, unknown to the patent, and invented to aid it, of which we have spoken before. Sundh, etc., Co. v. General Electric Co., 244 Fed. 169, 156 C. C. A. 591. What is patented here is not a condition or result, nor even a method or process, but a machine; i. e., the means of making something. And the question of invention is just this—was it of patentable novelty to reposition the old parts of a well-known machine, if the change produced either a new or an improved result? The answer to this query depends on whether the result is new or merely an improvement, whether the difference obtained is one of kind or of degree. Seymour v. Osborne, 11 Wall. 516, 20 L. Ed. 33; Railroad, etc., Co. v. Elyria Iron, etc., Co., 244 U. S. 285, 37 Sup. Ct. 502, 61 L. Ed. 1136. This question of fact we shall not attempt to resolve, and have stated it only to emphasize the definition of whatever invention can be claimed.

There are two points on which we feel constrained to differ with the court below, each of them dispositive of this case:

[3, 4] 1. Mayer has long made coating machines; indeed, this is not his first patent. In 1907 he sold several machines to a company managed by one Archbald, who is still in business, and is himself a mechanic, if not an inventor. Archbald had and has machines of makes other than Mayer, and experimented in changing and adapting his stock of tools. He made and still has what in this record is called the "18-in. machine," because that is the size of paper for which it is designed, and we find that that apparatus was finished and used by August, 1908; has coating and smoothing rolls close together, with scraper (and nothing else) interposed, so that the paper is not touched by any other object in its journey from dope roll to scraper, and scraper to the next adjacent roll.

The rules as to prior use are severe, and rightly so, and Archbald is a witness hostile to plaintiff; but the existence of the machine is not denied, its date of erection proved by other testimony than Archbald's, as also is its unchanged condition, and still another witness swears that it was in 1911 as it is now.

Certainty beyond reasonable doubt is reached by quality of evidence, and much depends on the nature of the thing sworn to. One witness may suffice (Tompkins v. N. Y. Woven Wire, etc., Co., 159 Fed. 133, 86 C. C. A. 323) if the surrounding circumstances are confirmatory; here are more witnesses than one, and we regard the circumstances as highly corroborative. The machine in question was designed for small work (it is also called the "little" machine in the record), and it is to us a most natural thing, in such a device, to abolish for lighter work idlers and guides used in larger apparatus, and compress the whole mechanism. Nor is the matter complex or difficult of statement, nor easily confused in memory. The machine is simple, and its simplicity strongly assists belief in the statements that it has been what it is now since a date more than two years before Mayer's application.

Digitized by Google

[5, 6] 2. The patentee made in 1908 a machine for production of carbon paper, known in this record as the "Stull machine." The coating and smoothing rolls were apparently nearer together than in Mayer's earlier machines, and there were interposed two equalizers, and an adjustable guide roll, functioning exactly as does the idler of defendants' apparatus. The testimony is vague, but we may adopt as most favorable to plaintiff the statement of his expert that the distance from "double scraper" to smoothing roll was 10 to 15 inches.

It is too plain, to require more than statement, that, if this machine is prior art, there was no invention in abolishing one scraper and the guide roll, and making the remainder more compact by moving slightly closer coating and smoothing rolls. But, if greater importance be attributed to the suppression of guide roll, then it will not lie in plaintiff's mouth to allege infringement against defendants, who have that very thing.

We think the obviousness of the foregoing is the reason why the contest at trial was not over the similarities or differences of the Stull machine and that of the patent, but on the question as to whether that device was anything more than an experimental use within the rule of Elizabeth v. Pavement Co., 97 U. S. 126, 24 L. Ed. 1000.

That Mayer was experimenting and seeking to improve his product, whether of machines or paper, is not doubted, and it is admitted that the machine described in the patent is an improvement upon many earlier Mayer machines, including the so-called Stull apparatus. The patentee took, doubtless, one step at a time, and kept his machines secret as much as possible; but, of course, he could not sell even what he reminiscently calls an experimental machine without making whatever the thing sold contained known to the public. One sale is a public use of whatever is parted with (Delemater v. Heath, 58 Fed. 414, 7 C. C. A. 279; Covert v. Covert [C. C.] 106 Fed. 183, affirmed 115 Fed. 493, 53 C. C. A. 225; Toch v. Zibell, etc., Co., 231 Fed. 716, 145 C. C. A. 597), even though what the purchaser got was imperfect, and subsequently greatly improved on (Star, etc., Co. v. Crescent, etc., Co., 179 Fed. at 859, 103 C. C. A. 342). We assume that the embodiment of the patent in suit is a much better machine than what Mayer made in 1908; but since that earlier machine would, if later, have infringed as plainly as does defendants', and for the same reasons, in respect of the narrow range of claims here in suit, the sole question is whether what occurred amounted in law to a sale.

In 1908, Mayer was impecunious, and apparently harassed by "supplementary proceedings" under the New York practice, something which justifies the assumption that he was a judgment debtor. Stull was a member of the bar, who had loaned Mayer money and had an agreement with him by which Mayer was to make carbon for Stull, presumably on the "Stull machine," and perhaps others. Mayer had also obtained money from his wife, and in September, 1908, executed a chattel mortgage to her, which covered what is known herein as the Stull machine. In the following November Mayer gave Stull a formal written transfer or bill of sale of the same machine, subject to his wife's mortgage, and she contemporaneously released the machine from the lien thereof. Five months later Stull as owner and in writ-

Digitized by Google

ing leased said machine to Mrs. Mayer, and she undoubtedly permitted her husband to make coated paper upon it, which was sold.

Plaintiff now contends that this tangled web was no more than a device to secure Stull for loans; that in effect he was but a mortgagee. As between the parties this may be true, though we do not so find. The point is immaterial, because what decides is the legal effect of the contractual acts of the parties and the resulting rights of the public. Stull became in 1908 the owner of this machine, of which the test is this: Any creditor of Stull could have levied on it, and Mayer would have been helpless; therefore the transaction was in law a sale—i. e., a transfer of title and property. Though relating to a chattel, we need not inquire whether there was a change of possession, for the law of New York was complied with by the papers executed and delivered. Quite probably part of the reason for this apparatus of documents was to prevent Mayer's creditors from reaching the property; but, just as the parties could not have turned the transaction into a mortgage to defeat Stull's creditors, so they cannot now do it to defeat the rights accruing to the public by the formal sale to Stull.

Therefore there was, by the Stull sale, public use, as that term is interpreted, of a machine which would infringe the claims in suit, if later than the patent; the act occurred more than two years before application, and the claims are thereby invalidated.

Accordingly the decree is reversed, and case remanded, with directions to dismiss the bill, with costs in both courts.

(248 Fed. 916)

PORTERVILLE CITRUS ASS'N v. STEBLER.

(Circuit Court of Appeals, Ninth Circuit. February 11, 1918. Rehearing Denied April 1, 1918.)

No. 2960.

PATENTS ⟹328—INFRINGEMENT—DISTRIBUTING APPARATUS.

The Stebler patent, No. 943,799, for a distributing apparatus for distributing into different bins fruit as it comes from a grader, as limited by the prior art, and especially by the Strain patent, No. 775,015, *held* not infringed.

Appeal from the District Court of the United States for the Northern Division of the Southern District of California; Oscar A. Trippet, Judge.

Suit in equity by Fred Stebler against the Porterville Citrus Association. Decree for complainant, and defendant appeals. Reversed.

Nicholas A. Acker, of San Francisco, Cal., for appellant.

Frederick S. Lyon, of Los Angeles, Cal., for appellee.

Before GILBERT and HUNT, Circuit Judges, and WOLVERTON, District Judge.

GILBERT, Circuit Judge. The appellee herein brought in the court below two suits, one against the Porterville Citrus Association,

Digitized by Google

a corporation, and one against the Mid-California Citrus Association, a corporation. By stipulation both cases were tried upon the record in the first case, and are now heard thereon in this court, the decree herein to dispose of both cases. In each case the plaintiff alleged that the defendant had infringed reissue letters patent No. 12,297, issued December 27, 1904, to Robert Strain, for a fruit grader, which patent had been assigned to the appellee, and letters patent No. 943,799, issued to Fred Stebler on December 21, 1909, for a distributing apparatus. The court below on the evidence found noninfringement of the first of these patents, but found infringement of claims 1, 2, 3, 5, 6, 7, 8, 11, 14, 15, and 19 of the Stebler patent. By inadvertence the decree was so framed as to adjudge infringement of the Robert Strain patent, and that the decree below should be corrected in that respect is not contested by the appellee.

The Stebler patent covers a combination for distributing fruit, such as oranges and lemons, after the same have been sized by a grading apparatus. The grading apparatus is not involved in the controversy. The object sought to be accomplished in the distributing apparatus is to utilize a short grader in conjunction with a long series of bins arranged along the side thereof, and to accomplish this result Stebler uses, in connection with a traveling belt, adjustable guides or partitions extended obliquely across the supporting means; each guide comprising telescoping members and means for adjusting the longitudinal position of the outer ends thereof.

We find it unnecessary to consider in detail any of the inventions of the prior art, except that of the Thomas Strain patent of November 15, 1904. Upon the combination described in that patent can be read all of the claims of the Stebler patent, except the features which distinguish the Stebler patent from the prior art, and these are the guides which extend from the outlets of the grading device and are adjustable at the outer ends, and extendable by means of telescoping ends, and the use in connection therewith of a series of bins which extend greatly beyond the length of the grading device. Therein is the novelty of the Stebler combination. The adjustability of the bins by the use of movable partitions called for by claims 11 and 19 was old in the art, and was used in various forms in prior combinations, and was not susceptible of monopoly by Stebler. The Thomas Strain combination exhibits the traveling belt and guides or deflectors, on each of which is adjustably mounted a lug clamped thereto by means of a set screw, "so that fruit will be shunted into the bin at any desired point." This deflector was intended to be used for the even distribution of the fruit in each bin, but the evidence is that fruit which normally would go to a bin could be carried on to an adjacent bin.

Now, what is done by the Strain combination is all that is accomplished by the appellant, and the appellant accomplishes it in the same manner and by substantially the same means. The appellant uses a grader with nine independently rotatable rollers, each having a given area for the escape of the sized fruit, and nine bins, one for each roller, to receive the fruit sized thereby, and, in connection with a longitudinally traveling belt, a number of barriers or small slats arranged parallel with the traveling belt so as to arrest the downward

Digitized by Google

gravity flow of the sized fruit and change its direction of travel to a direction parallel with the belt, for the purpose of deflecting it into the bins at any desired point. These barriers are used in the same way and for the same purpose as the barriers or brackets in the Strain combination. It is true that they may be so adjusted as to vary the delivery from one bin into an adjacent bin; but that, as we have seen, can be accomplished by the brackets of the Strain device. That, however, is not the purpose of their use, and to use them in that way would be to put out of operation the next succeeding grader unit, for the fruit from that unit could not be delivered into any bin. Therein is an essential difference between the guides of the Stebler patent, the barriers of the defendant, and the brackets of Strain. The guides of the Stebler patent belonging to one grading unit may be adjusted to turn the fruit to the adjacent bin, without deranging the action of the adjacent guides in carrying the fruit from the adjacent grade outlet to some other bin.

The proceedings in the Patent Office on the application for the Stebler patent afford light upon the nature of the Stebler invention. The examiner rejected all of the claims, except claim 5, as anticipated by the Rayburn patent of October 20, 1903, No. 741,928, the Stevens patent of June 23, 1903, No. 749,459, and the Strain patent of November 15, 1904. Claim No. 5, which was allowed, called for a combination, one element of which was a series of bins whose longitudinal extension is greater than the longitudinal extension of the grader, and another element of which was guiding means with adjustable outer ends. In the argument before the examiner counsel for the applicant stated that one of the primary objects and purposes to be accomplished by the applicant's device was to permit an extension of the bins longer than the extension of the grading element, so as to use a relatively short grader and sizer, and utilize a distributing conveyor and carry the sized fruit to bins of a desired width, extending "much beyond the length of the grader." Again, they said:

> "One of the particular features of this apparatus, and one upon which its commercial value depends to a great extent, is the interrelation of the longitudinally adjusted fruit bins in connection with the adjustable guiding means on the conveyor."

The examiners in chief, on appeal from the examiner's ruling, said that claim 1 sufficiently represented the appealed claims. One element of that claim so referred to is:

> "The longitudinal extension of the said distributing means being greater than the longitudinal extension of the grading element."

The examiners in chief distinguished the Rayburn patent by pointing to the fact that the distributing means thereof is not "traveling," and that it lacks the element of the Stebler invention:

> "The longitudinal extension of the delivery portion of the said distributing means being greater than the longitudinal extension of said grading element."

They said that the distributing means of the Strain invention were clearly unadapted to the applicant's device, and in order to be used therewith would require such modification as to lose entirely their identity, that the Stevens device is more nearly in point, since he

Digitized by Google

shows the longitudinally traveling belt with the directing members across it; but they distinguished the Stevens device on the ground that "the delivery portion of the distributing means is not greater than the longitudinal extension of the grading element," and that the Stevens machine operates differently and was not adapted to sort oranges, in which it is important that the slightest abrasion of the skin be avoided.

The appellee insists that the appellants have availed themselves of that feature of the Stebler patent which calls for the extension of the bins beyond the length of the grading table. The manager of the Porterville Citrus Association testified that, in the machine installed in his packing house and used by his company, the bins for receiving the sized fruit did not extend beyond the sizing or grading member of the apparatus. On the other hand, Stebler found in the photographs taken of one of the appellant's apparatus evidence that the bins extended beyond the grading apparatus the width of one bin, or 45 inches, and in this he was corroborated by the testimony of an expert witness testifying also from the photographs. The photographs are in evidence, and they seem to show the extension of the bins to the extent indicated by Stebler. We do not regard an extension to that limited degree as an invasion of the appellee's claims. The idea of the appellee, as expressed in his specifications, was to provide for bins "extended much beyond the length of the grader," and in the proceedings before the Patent Office this feature of extending the bins "much beyond the length of the grader" was emphasized, and declared to be one of the primary objects and purposes of the device, and it is shown that the appellee's bins constructed under the patent do in fact extend from 12 to 15 feet beyond the grader. An extension of but 45 inches is not, we think, an extension within the meaning of the Stebler claims, and is not sufficient to amount to a substantial extension of the bins beyond the grading apparatus.

We think that the claims of the Stebler patent must be so construed as to limit his invention to the features which he added to the Thomas Strain combination, and that, when so construed, the appellant does not infringe.

The decree of the court below is reversed, and the cause is remanded, with instructions to dismiss the bill.

(248 Fed. 919)

SIMPLEX WINDOW CO. v. HAUSER REVERSIBLE WINDOW CO. et al.

(Circuit Court of Appeals, Ninth Circuit. February 11, 1918. Rehearing Denied April 1, 1918.)

No. 3004.

1. PATENTS ⟹311—SUIT FOR INFRINGEMENT—ISSUES.

Where defendant in an infringement suit does not deny the validity of the patent, nor set up any prior use, invention, or patent, evidence of such prior invention or patent is receivable only to show the state of the art, and to aid in the construction of the patent.

⟹For other cases see same topic & KEY-NUMBER in all Key-Numbered Digests & Indexes

Digitized by Google

2. PATENTS ⟹312(1)—SUIT FOR INFRINGEMENT—EVIDENCE.
That defendant's alleged infringing device is made under a later patent is not presumptive evidence of noninfringement.

3. PATENTS ⟹328—VALIDITY AND INFRINGEMENT—WINDOW.
The Soule patent, No. 1,072,669, for a window of the swinging sash type, covers an automatically operating device for holding the window in any desired position, and, while for a combination of old elements and by no means a pioneer patent, is valid, and marks a distinct advance in the art, and is entitled to a range of equivalents in proportion to such advance. As so construed, *held* infringed.

Appeal from the District Court of the United States for the Second Division of the Northern District of California; Frank H. Rudkin, Judge.

Suit in equity by the Simplex Window Company against the Hauser Reversible Window Company, Frederick Hauser, and Jessie Hauser. Decree for defendants, and complainant appeals. Reversed.

John H. Miller, of San Francisco, Cal., for appellant.

Scrivner & Hettman and Frank R. Sweasey, all of San Francisco, Cal., for appellees.

Before GILBERT, ROSS, and HUNT, Circuit Judges.

ROSS, Circuit Judge. This suit was commenced in the court below by the present appellant against the appellees, for the alleged infringement of two certain letters patent, numbered, respectively, 1,072,669 and 1,159,604. After trial the court held that there was no infringement, and accordingly gave judgment for the defendants to the suit, resulting in the present appeal by the complainant.

[1] In this court the appellant has abandoned all claims under its patent numbered 1,159,604, and contends for a reversal of the judgment only by reason of its first patent. For the appellees it is contended, and has been elaborately argued, that that patent is invalid, the answer to which contention is that its validity was not denied in the court below, the defense there being made solely on the ground of noninfringement—the defendants denying that they have ever jointly or severally made or used or sold any device containing or embodying the inventions patented in and by the two letters patent under which the complainant claimed, and, on the contrary, alleging in effect that the only device they made, used, or sold was one of which the defendant Frederick Hauser was the original and first inventor, and which was duly patented to him October 20, 1914, by letters patent numbered 1,114,260. The defendants by their answer did not set up any prior use or prior invention or prior patent to those under which the complainant claimed, and such defenses were receivable in evidence only to show the state of the art, and to aid in the construction of the patent. Morton v. Llewellyn, 164 Fed. 693, 694, 90 C. C. A. 514, and cases there cited.

[2] Nor can the contention on the part of the appellees be sustained that the patent under which they claim is presumptive evidence that there was no infringement by them of the appellant's prior patent. The cases hold that it is presumptive evidence of a difference of that

⟹For other cases see same topic & KEY-NUMBER in all Key-Numbered Digests & Indexes

Digitized by Google

patented device from the prior patent of the appellant, but not presumptive evidence of any infringement. Miller v. Eagle Mfg. Co., 151 U. S. 186, 208, 14 Sup. Ct. 310, 38 L. Ed. 121; Herman v. Youngstown Car Mfg. Co., 191 Fed. 579, 585, 586, 112 C. C. A. 185; Murray v. Detroit Wire Spring Co., 206 Fed. 465, 124 C. C. A. 371; Curry v. Union Electric Welding Co., 230 Fed. 422, 429, 144 C. C. A. 564; General Electric Co. v. Electric Controller Co., 243 Fed. 188, 156 C. C. A. 54; Acme Harvester Co. v. Frobes (C. C.) 69 Fed. 149.

The latter question—that is to say, that of infringement—is for the decision of the court, to determine which it is essential to ascertain, in the first place, what the invention was that is covered by the prior patent; next, the construction to which that patent is entitled, taking into view the prior state of the art; and, finally, whether or not there has been an infringement of the prior patent by the device of the appellees which they confessedly have made, used, and sold.

[3] Looking at the appellant's patent, the invention covered by which was made by one Soule, we find the inventor states in the specification of his application for letters patent, among other things, as follows:

"My invention relates to windows, and especially to windows of the swinging reversible sash type; and it has for its object to provide a new and improved window of the character specified, which, while remaining in a state of stable equilibrium in whatever position it may be placed, may readily be moved from any position to any other.

"With this object in view, my invention consists in a sash slidably pivoted in a window frame, adjuster arms having one end fixedly pivoted in and slightly above the middle points of the stiles and the other end slidably pivoted in the frame, and carrier arms having one end fixedly pivoted in the frame and the other end fixedly pivoted to the adjuster arms.

"It also consists in the combination, with a frame, sash, adjuster arm, and carrier arm, of a plate having means for automatically adjusting its position on the frame.

"It also consists in the novel parts, combinations, and arrangements set forth in the following description, particularly pointed out in the claims, and illustrated in the accompanying two sheets of drawings"

—some of which drawings, as well as some of the drawings illustrating the Hauser patent, will be subsequently inserted.

The three claims of the patent alleged to have been infringed are the first, fourth, and seventh, which claims are as follows:

"1. A window, comprising a frame, a sash slidably pivoted in said frame, adjuster arms, one end of which being fixedly pivoted at points slightly above the middle of the sash stiles and the other end slidably pivoted in the frame, and carrier arms, one end of which is fixedly pivoted in the frame and the other end fixedly pivoted to the corresponding adjuster arm."

"4. A window, comprising a frame, a sash in said frame, an adjuster arm pivotedly secured at one end to said frame and at the other end to said sash, and a carrier arm pivotally secured at one end to said frame and at the other end to said adjuster arm."

"7. A reversible window, comprising a sash, an adjuster arm of suitable length, a carrier arm supporting said adjuster arm and window sash, a slidable pivoted connection between said frame and one end of said adjuster arm, and a pivoted connection between the other end of said adjuster arm and points near the middle of the sash stiles about which said sash is rotatable."

One thing is manifest from that portion of the specification above quoted, which is that the Soule invention was but an improved win-

Digitized by Google

dow of the character therein specified, namely, "windows of the swinging, reversible type"; for such is the inventor's express declaration. There is therefore no ground for the appellant's contention that reversible windows were new before the Soule invention.

Two specimens of the prior art introduced in evidence by the appellees are a patent issued to Oscar Frotscher, November 28, 1893, in which that inventor said in his specification, among other things, that his invention—

"relates to certain new and useful improvements in windows of that class in which provision is made for allowing the sliding sash to be swung out or reversed if desired, for cleaning or other purposes, and it has for its object, among others, to provide a window of this class which can be cheaply made, easily operated, and not liable to get out of order. It has for a further object to provide simple, yet efficient, means for holding the sash inclined for ventilation, and for a still further object the provision of means for firmly holding the sash in position for cleaning."

The second was the ordinary awning device, which the appellees contend disclosed every feature, mechanical and structural, of that of Soule, except in minor details of construction.

Regarding the Frotscher device, the model of which was introduced in evidence, the defendant Frederick Hauser himself testified:

"I never have made any windows like that. I didn't want to make them like that. They are useless. I found out they are useless, with windows made that way; so I got up my own idea, which is a useful device. The other one is not a practical or a useful device. I say it is not a useful device. No, you can not use it; but I would like to explain it a little better. You can use it, but it is, in other words, not practicable, not a practicable device. They do not use it at all any more. They used to use it, but they hardly don't use it any more, not even on stepladders."

And in respect to the awning device the witness Vale testified on behalf of the plaintiff in the suit as follows:

"In the first place, the function of the slide in the awning support is to get the support, which in this instance corresponds to the carrier arm, on a horizontal, so that it will not strike the heads of persons passing under the awning, and any one who has ever watched the operation of an awning will notice that practically the whole canvass forming the awning will be lowered to position before this carrier arm will suddenly flop out to a horizontal position, and it remains there until the awning is rewound practically to its whole extent, and then that arm will drop down again. It does not go through any synchronous movement in raising and lowering the awning."

And the testimony of the appellees' witness Behnke as to that device is much the same in substance, which testimony we think is in accord with the ordinary understanding of the working of an awning. Neither of the devices thus referred to by the appellees can, in our opinion, be regarded as anticipatory of the patents of either the appellant or the appellees.

It is apparent that each of the claims of the appellant's patent alleged to have been infringed is a combination claim composed of old elements—claim 1 consisting of a frame, a sash slidably pivoted in the frame, adjuster arms having one end fixedly pivoted at points slightly above the middle of the sash and the other end slidably pivoted in the

Digitized by Google

frame, and carrier arms having one end fixedly pivoted to the frame and the other end fixedly pivoted to the adjuster arm. Claim 4 consists of a frame, a sash, an adjuster arm pivotally secured at one end to the frame and at the other end to the sash, and a carrier arm pivotally secured at one end to the frame and at the other end to the adjuster arm. Claim 7 consists of a sash, an adjuster arm, a carrier arm supporting the adjuster arm and the sash, a slidably pivoted connection between the frame and one end of the adjuster arm, and a pivoted connection between the other end of the adjuster arm at a point near the middle of the sash about which the sash is rotated.

The following illustrations are taken from the Soule patent:

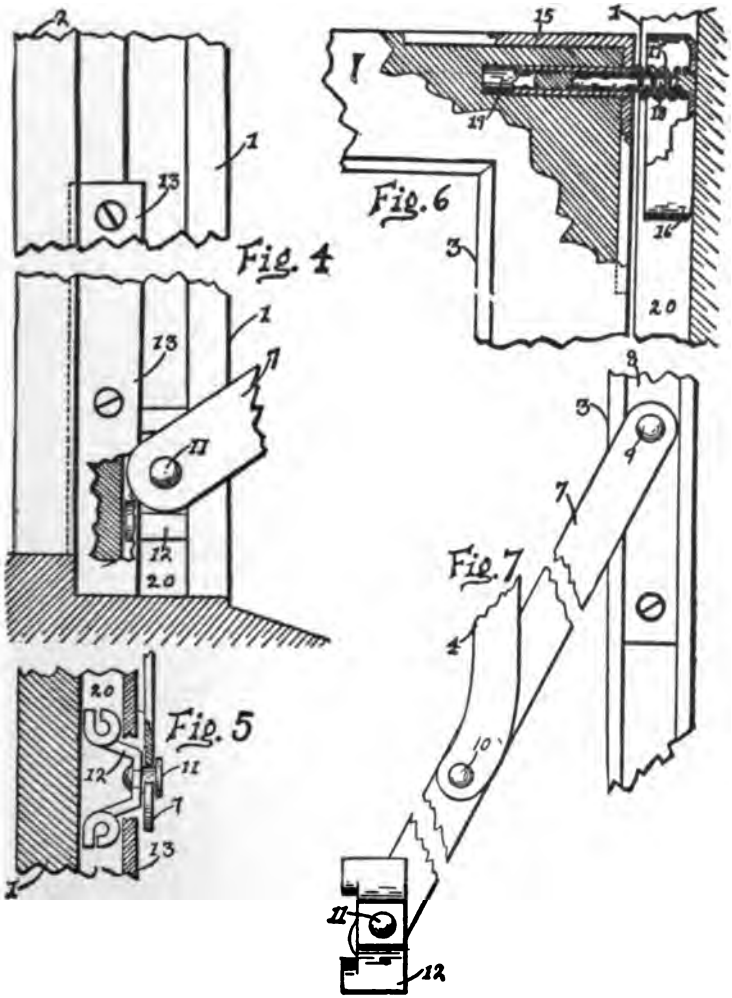

Digitized by Google

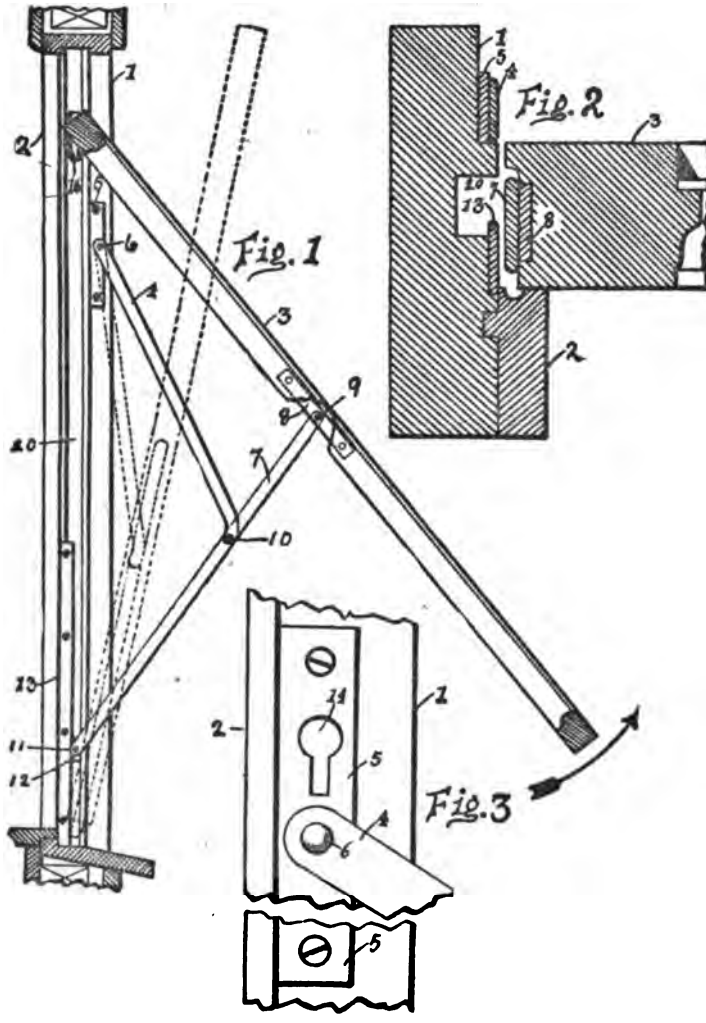

As we understand the Soule device, it is an automatically operating one for holding the window in any desired position; and while his patent cannot, in our opinion, be properly regarded as a pioneer one in any sense, we think the improvement invented by the appellant's assignor marks such a distinct advance in the art over anything theretofore existing, so far as has been shown, as entitles the patent to the protection of the doctrine of equivalency in proportion to such advance. American Can Co. v. Hickmott Asparagus Canning Co., 142 Fed. 141, 73 C. C. A. 359, and cases there cited; Miller v. Eagle Mfg. Co., 151 U. S. supra, 186, 207, 14 Sup. Ct. 310, 38 L. Ed. 121.

The patentee of the Hauser patent, which was issued October 20, 1914, set forth, among other things, in his specifications, the following:

Digitized by Google

"One object of the present invention is to provide means for so securing window sashes in window frames that they can be swung horizontally and reversed, to permit both sides of the sash to be readily cleaned from the inside of the room.

"A further object is to provide such fastening means, which will be simple and inexpensive, and which can be readily secured in place by a carpenter having no special skill or experience.

"A further object is to provide such fastening means, which can readily be adapted to the usual slidable window sashes, to convert them into swinging reversible sashes."

The following figures are illustrative of his device:

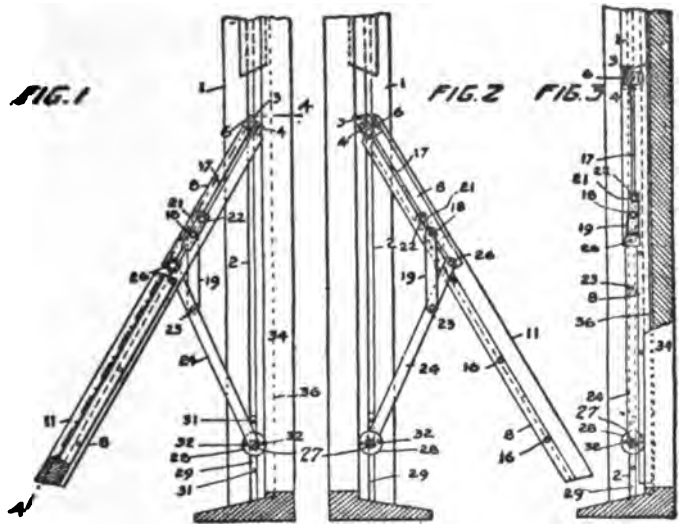

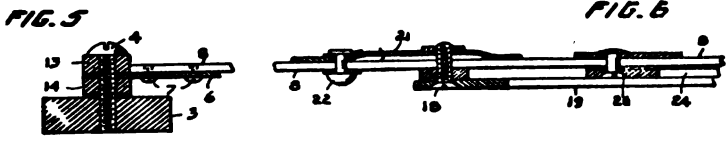

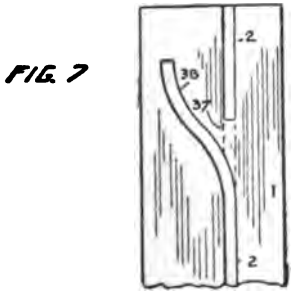

Digitized by Google

It is apparent, from a comparison of the two devices, that they both produce the same result. The real question is: Do they do so by substantially the same means? It is needless to cite the numerous cases in support of the law clearly stated in section 348 of Walker on Patents, the substance of which is that changing the relative position of the parts of a machine does not avert infringement, where the parts transformed perform the same respective functions after the change as before, but that such change does do so where the changing of those positions so changes the functions of the parts that the machine acquires a substantially different mode of operation, even though the ultimate result remains the same.

Like the claims of the Soule patent, those of the patent to Hauser are also combination claims of old elements. In fact, the two devices are very much alike. In each the window is reversible and can be held in stable equilibrium at any desired point; each has an adjuster arm, a carrier arm, and a sliding mechanism in connection therewith by which the same result is attained—the chief difference being that in the Soule device the lower end of the adjuster arm is slidably pivoted in the window frame and its outer end rigidly pivoted therein, whereas in the Hauser device the lower end of the adjuster arm is rigidly pivoted in the window frame and its upper end slidably pivoted in the window sash by means of the link numbered *19*. In other words, in the one the sliding mechanism is located in the window frame, and in the other in the window sash. We are of the opinion that this is a mere change of location, and that the means adopted by Hauser are the mechanical equivalent of those adopted by Soule, accomplishing the same result by substantially the same operation, and that accordingly the alleged infringement is sustained. We think this conclusion well supported by the decision of the Supreme Court in Ives v. Hamilton, 92 U. S. 426, 23 L. Ed. 494.

The judgment is reversed, and the case remanded for further proceedings in accordance with the views above expressed.

Digitized by Google

(248 Fed. 927)

STEBLER v. PORTERVILLE CITRUS ASS'N.

(Circuit Court of Appeals, Ninth Circuit. February 11, 1918. Rehearing Denied April 1, 1918.)

No. 3052.

1. PATENTS ⟹328—INFRINGEMENT—FRUIT GRADER.

The Thomas Strain patent, No. 775,015, for a new and useful fruit grader, which evenly distributed fruit in bins, *held* not infringed by defendant's machine.

2. PATENTS ⟹241—INFRINGEMENT—IDENTITY OF RESULT.

That defendant's machine accomplished the same result as complainant's patented device does not show infringement, where there was a variation in the means used.

Appeal from the District Court of the United States for the Northern Division of the Southern District of California.

Suit by Fred Stebler against the Porterville Citrus Association, for an injunction restraining an infringement of complainant's patent and a decree for profits realized and damages sustained by reason of the infringement. From a decree for defendant, complainant appeals. Affirmed.

The complainant, Stebler (appellant), is the owner of United States letters patent numbered 775,015, for a new and useful fruit grader, granted to Thomas Strain on November 15, 1904. Complainant charges the defendant with making, using, and selling fruit graders embodying and containing the invention covered by said letters patent, and by his bill of complaint, filed February 11, 1916, he seeks to restrain the defendant from such infringing acts, and to recover damages sustained by complainant by reason thereof, and profits realized by defendant upon the sale of such invention.

Complainant's title to the patent is undisputed, but the defendant in its answer denies that any new or useful invention was contained in said patent, and sets up some 12 anticipatory patents, denies infringement of the same, and avers that the patent is wholly void and of no effect. The suit was combined for final hearing with another cause between the same parties, involving the use of the same machines by the defendant, but claimed to infringe other patents of the complainant. The court dismissed the bill of complaint in this case, and gave judgment to the defendant for its costs. From that judgment complainant appeals.

Frederick S. Lyon, of Los Angeles, Cal., for appellant.
Nicholas A. Acker, of San Francisco, Cal., for appellee.

Before GILBERT, MORROW, and HUNT, Circuit Judges.

MORROW, Circuit Judge. [1] It is contended that the fruit graders manufactured and sold by the defendant company contain such features of the complainant's invention, covered by letters patent No. 775,015, as to constitute infringement thereof. That an identity of results is produced by the two devices is granted; but it is claimed by defendant that there is not identity of means and operation.

The claims of complainant's patent said to be infringed comprise, briefly speaking, traveling means for conveying fruit along a definite

⟹For other cases see same topic & KEY-NUMBER in all Key-Numbered Digests & Indexes

Digitized by Google

line of travel, consisting of grading and conveyor belts, inclined grading rods, a series of bins for receiving the fruit from the traveling belts, and a series of barriers or arresting members devised to guide and direct the sized fruit to any desired discharge point in the receiving bins; some of these barriers being fixed and some adjustable.

The principal object of the invention being the equal distribution of the sized fruit throughout the bins, particular attention must be paid to the devices which control this feature of the invention. The first is the slender, flexible, rotating grading rod, capable of being flexed at predetermined points to provide a series of discharge apertures; each constantly increasing in dimensions. This rod lies along the line of travel, above the conveyor belt, and in operation rotates in a direction away from the belt. The various sizes of fruit escape at the various apertures, and are carried by the conveyor belt to certain guards, against which the fruit rests until the belt has traveled a sufficient distance to bring it opposite a desired bin, at which point the deflector shunts the fruit into the bin. The guards and deflectors are so arranged that the fruit is distributed evenly to all parts of the bin.

The action of the grading rod is controlled in two ways, according to the specifications; the space between the rods and the conveyor belt being adjusted by raising or lowering the rods by means of the arms on which they rest, or by raising or lowering the hinged leaves which are a part of the supporting table over which the belt travels. Although the latter method is referred to as preferable in the specifications, the testimony discloses that it was not in fact used by the complainant in the operation of his machines. It is to be noticed that the position of the grading rod is not an absolutely fixed one, but is so arranged that it can be quickly adjusted and altered when desired.

In the defendant's machine the grading is accomplished by means of a series of nine rollers rotating in unison, but definitely fixed in position at varying spaces from the conveyor belts, thus forming apertures through which the different sizes of fruit escape into the nine bins provided to receive the sized fruit. The fruit then rolls by gravity into the bins opposite the respective discharge apertures, instead of being carried thereto by the conveyor belts, as in the complainant's device. Under normal conditions the distribution in the bins is accomplished without further devices, according to the testimony; but, when a greater number of one particular size of fruit is running than the packers can easily handle in one bin, a longitudinally adjustable barrier or small slat, arranged parallel with the conveyor belt, is placed by the packers in the groove of the supporting table arranged to receive it, which arrests the flow of the fruit, and changes its direction and deflects it to a point within the bin desired by the operator.

In support of the defendant's defense of anticipation the prior patents issued to Banker, Gunckel, Ayer, Jones, Hutchins, Ish, Hutchins, Rice, Richards, Stevens, Cerruti, and Nelson, respectively, are relied upon. From the proceedings in the Patent Office, as shown by the file wrapper and contents introduced on the trial of this case, it appears that all of these patents, with the exception of the Stevens and Cer-

Digitized by Google

ruti devices, were before the examiners and considered by them before the issuance of patent to the complainant's assignor, Thomas Strain. The Stevens patent was introduced as an exhibit in this case, and we find the machine there disclosed is not the same in means and operation—the conveyor belt being absent, and the fruit reaching the bins by gravity only; further, that it is not adapted to the sorting of oranges.

This court reviewed the state of the prior art in relation to fruit graders in the case of Stebler v. Riverside Heights Orange Growers' Ass'n et al., 205 Fed. 735, 124 C. C. A. 29, and 240 Fed. 703, 153 C. C. A. 501. The complainant there was the complainant here. He was there suing to maintain his rights under the reissue patent, No. 12,297, issued December 27, 1904, to Robert Strain, and later assigned to the complainant, and the defendant there was using a device made under patent No. 997,468, issued July 11, 1911, to one George D. Parker. In the first case (205 Fed. 735, 124 C. C. A. 29) the validity of the Robert Strain reissue patent was upheld, and infringement thereof by the Parker patent was found. In the second case (240 Fed. 703, 153 C. C. A. 501) the patent complained of was a modified form of the Parker patent, designed to avoid the infringing elements found in the first instance. This court there held that in the modified form the device was not an infringement of the Robert Strain patent.

[2] The defendant herein contends that its device is the same Parker modified device, "excepting, in lieu of adjusting the roller units toward and from the endless conveyor to vary the area of the discharge outlets of the fruit runway, the narrow endless conveyor belt is adjusted toward and from the roller units of the fruit runway," and that, if it is not an infringement of the Robert Strain reissue patent, No. 12,297, issued December 27, 1904, it cannot be held to infringe the Thomas Strain patent, No. 775,015, issued November 15, 1904.

An examination of the two patents does not disclose such similarity of means as to make such a conclusion imperative. The Thomas Strain device uses grading mechanism consisting of one long, slender, rotating, flexible rod, while the Robert Strain device uses a series of rotating rollers, capable of adjustment at different distances from the belt, to provide for the discharge apertures of varying dimensions. The same result is accomplished, but by a different mechanical arrangement; and as to the distributing features a still greater difference is observed. Indeed, the principal inventive idea of the Thomas Strain patent seems to be contained in the arrangement for the even distribution of the sized fruit in the bins, by the use of guards and deflectors above the conveyor belt, thereby controlling the ejection of the fruit from the grader into the bins, in place of allowing the unrestricted flow by gravitation, the common means used in the art for a long period of time.

We do not think the Thomas Strain patent and the Robert Strain patent are sufficiently identical, therefore, to make a device found to be an infringement of the Robert Strain patent, as this court did in Stebler v. Riverside Heights Orange Growers' Ass'n, 205 Fed. 735, 124 C.

Digitized by Google

C. A. 29, a consequent infringement of the Thomas Strain patent, as claimed by the complainant in this case.

Coming, now, to the defendant's device, it remains only to consider the distributing features thereof. No control over the ejection of the fruit from the grader is provided; the fruit merely rolling by gravity into the bins opposite the various discharge apertures. There are, it is true, longitudinally adjustable barriers, which may be placed in grooves of the supporting table, to arrest the flow of the fruit and change its direction to another point in the bin, and these are claimed to infringe the deflectors and stationary guards of complainant's patent. But we regard this feature as one which would naturally suggest itself to any one using a grading machine operating by gravity, and is, in fact, a mere dividing of the quantity of fruit which is being handled through a particular aperture, and not a new or inventive operation.

While the same result is accomplished in the defendant's machine as in the complainant's, there appears to be such a variation of means as to avoid infringement in the features complained of. Cimiotti Unhairing Co. v. American Fur Ref. Co., 198 U. S. 399, 25 Sup. Ct. 697, 49 L. Ed. 1100.

The judgment of the District Court is affirmed.

(248 Fed. 960)

TURNER v. LAUTER PIANO CO. et al.

(Circuit Court of Appeals, Third Circuit. January 17, 1918. Rehearing Denied March 7, 1918.)

No. 2285.

1. PATENTS ⟹328—VALIDITY—REENFORCED CONCRETE CONSTRUCTION.

The Turner patents, No. 985,119, claims 4 and 8, and No. 1,003,384, claims 1, 5, 10, 11, 16, and 17, each for a steel skeleton concrete construction, *held* void for lack of invention, in view of the prior art.

2. PATENTS ⟹37—"INVENTION"—NEW COMBINATION OF OLD ELEMENTS.

The union of selected elements from various sources in a patented structure may be an improvement upon anything the art contains; but if, in combining them, no novel idea is developed, there is no patentable invention, however great the improvement may be.

[Ed. Note.—For other definitions, see Words and Phrases, First and Second Series, Invention.]

Appeal from the District Court of the United States for the District of New Jersey; Charles P. Orr, Judge.

Suit in equity by Claude A. P. Turner against the Lauter Piano Company and the American Concrete Steel Company. Decree for defendants, and complainant appeals. Affirmed.

For opinion below, see 236 Fed. 252.

Frank A. Whiteley, of Minneapolis, Minn., and Willard Eddy, for appellant.

A. C. Paul, of Minneapolis, Minn., and Edward Rector, of Chicago, Ill., for appellees.

⟹For other cases see same topic & KEY-NUMBER in all Key-Numbered Digests & Indexes

Digitized by Google

Before BUFFINGTON, McPHERSON, and WOOLLEY, Circuit Judges.

WOOLLEY, Circuit Judge. This suit for infringement of Letters Patent No. 985,119, issued February 21, 1911, and Letters Patent No. 1,003,384, issued September 12, 1911, to C. A. P. Turner, is here on plaintiff's appeal from a decree of the District Court dismissing the bill on the ground of invalidity of the claims in issue. 236 Fed. 252; 239 Fed. 560.

The two patents sustain the relation of divisional and parent patent. The divisional patent (the earlier to issue), was granted upon an application filed October 19, 1910, as a division of the original application of June 11, 1907; the patent referred to as the parent patent was granted upon the original application. The two patents relate substantially to the same invention, the principal differences being in the scope of their claims. We shall, therefore, consider them together.

[1] The patents in suit are for steel skeleton concrete construction and relate particularly to reenforced concrete girderless floorings. The claims in suit are claims 4 and 8 of the divisional patent (No. 985,119), and claims 1, 5, 10, 11, 16 and 17 of the parent patent (No. 1,003,384), all of which are given in full in the opinion of the District Court. 236 Fed. 252, 254, 255. For the purpose of this discussion, claim 1 of the parent patent may be taken as a typical claim. It is as follows:

"An arrangement of reenforcement for a column-supported flat plate floor of concrete, comprising a plurality of circumferential cantilever members, respectively situated in the upper part of the slab at the columns and projecting therefrom, and reenforcing means extending from member to member in multiple directions through the space between said members, and filling, or substantially filling such space."

The object of the Turner invention is to provide a monolithic single panel floor made of concrete with metal reenforcement, which supports itself and its load on separate columns without beams, girders, or horizontal supports of any kind. The means disclosed by the patents is intended for use in building structures of one or more stories, with reenforced concrete columns and intervening reenforced concrete floors integral therewith. The column reenforcement is vertically continuous; the floor reenforcement originates in the columns, and passing upwardly, bends at the column heads and radiates laterally in the floor slab. Upon or above the head of each column is placed a circular spider of large steel rods raised to what becomes the upper plane of the slab when the concrete is poured in. This spider is anchored at its center in the column and overhangs the column an equal distance in all directions. Because of its position and function, it is termed a cantilever head; because of its shape, it is described as a circumferential cantilever reenforcement. Ordinary reenforcement metal rods of about three-eighths of an inch in diameter are laid from cantilever head to cantilever head in every direction. When the concrete hardens and the plate is formed, reenforcement rods extend from one cantilever head in the upper plane of the plate above a column; as they leave the cantilever, they sag into the lower plane of the plate

Digitized by Google

between columns; and as they approach the cantilever head of another column, they rise again to the upper plane and pass on as before. Multiple reenforcement is carried on in this way from column to column in all directions, producing between columns a sagging network of metal rods.

As we have said, the thing which the inventor sought to make, is a flat plate floor that will support itself without the aid of beams or girders. In such a floor, extending from and being supported only by four equidistant columns, for example, the effect of a load on the plate midway the supporting columns is to deflect it or press it downwardly and to give it the shape (though imperceptible) of a dish or saucer. Such a circular deflection produces many stresses. These are both radial in outward directions from the columns and circular along lines concentric with the columns. It also develops tensile strains in different planes of the plate: namely, in the upper plane above the columns and in the lower plane between the columns. Such being the natural stresses and strains upon a flat and girderless plate, the patentee claims invention in placing cantilever reenforcement above each column in the upper plane of the plate, and in placing metal rod reenforcement in the lower plane of the plate between columns, and in so shaping the cantilever reenforcement that it will take up the radial and circular strains as they are created. Therefore, the principle which we understand the patentee has endeavored to embody in his means, is the supplying of metal reenforcement at points where tensile strains are expected, and the distribution of reenforcement with an especial regard to the natural tendency of the slab to bend under a load in dish like shape.

The thing which the patentee claims to have achieved by his patented construction, is the making of a thin slab flooring, which will carry as heavy a load as the thick slab flooring of the prior art, at a lesser cost. The trade name which he has given his construction is the Turner Mushroom System.

Reenforced concrete of the modern kind came into use as a building material about fifty years ago. Its growth has been very rapid; it is now used upon an immense scale in a great variety of structures. During the progress of this art, much has been learned concerning the properties of concrete and great advances have been made in methods of using it. Yet, notwithstanding the knowledge acquired and the advances made, the fundamental problems of the art are the same today as they were in the beginning. They have to do with the peculiar characteristics of concrete and with means for meeting them. It is a matter of general knowledge that concrete is strong in resisting compression strains and weak in withstanding tensile strains. Places at which both strains may be expected, while susceptible of accurate mathematical ascertainment, are so well known that they are determined empirically by many engaged in the art. Therefore, as it is easy to ascertain, in one way or another, just where weak places in concrete construction are, the art has produced means with which to strengthen them. This consists in their reenforcement with materials possessing characteristics precisely the opposite of those of concrete. Thus,

Digitized by Google

metal which possesses tensile strength is placed at weak points in concrete where it is subjected to tensile strains. This is called reenforcement and the product is reenforced concrete.

There is today neither invention nor novelty in merely placing metal reenforcement in concrete at places at which strains come. The very principle of reenforcement, as the word denotes, is to give force to or strengthen the place that is weak by adding something that is strong. Invention in reenforcement is to be found only in discovering a new principle or in employing new means embodying the old principle. Therefore, one striving to find a new principle or to invent a new means of concrete reenforcement under the old principle, enters a well known and widely practiced art and must do something more than care for tensile strains at places where they are known to come. Turner's brief is a learned dissertation on the principles and practices of the art of reenforced concrete construction. It is clear, after reading it, that he appropriates to his invention (rather unconsciously, we believe), many of the principles and some of the practices that have long been in the art. Had he been first to discover and apply them, his claimed invention would have been a great invention. But, in appropriating and applying them in his patented construction, he does not achieve invention unless he causes the old principle to operate in a new way, or the old means to perform new and different functions, resulting in a useful advance of the art.

We make these observations concerning an art of which there is a broad general knowledge, simply to show that Turner was not early in entering it, and that he was not a pioneer in the solution of its problems. Nor was Turner the first to conceive the idea of a beamless or girderless floor. The record discloses girderless reenforced concrete floorings constructed several years before Turner applied for a patent. Most prominent among these is the reenforced girderless and beamless concrete floor of O. W. Norcross, for which Letters Patent No. 698,542 was granted April 29, 1902. As the Norcross patent has been in conflict with the Turner patents in another litigation, and as the validity of the Turner patents must be determined in view of the Norcross patent as a part of the prior art, we find it necessary to discuss this patent at some length.

Stating the purpose of his invention, Norcross says in his specification:

> "This invention relates to a flooring for buildings which has been designed with a view of securing the advantages, first, of entirely dispensing with all girders or floor-beams, which have heretofore been regarded as absolutely essential for supporting the floors of buildings; second, to provide a form of flooring which will utilize to best advantage the immense crushing strength of concrete, and, third, to provide a strong inexpensive solid inflexible flooring which can be laid in place by unskilled labor."

To attain these results Norcross designed a flooring consisting of a single panel of reenforced concrete co-extensive with the entire floor space and extending in one unbroken slab or panel from wall to wall of a building, supported at intervals by uprights, posts, or columns. The essential features of the invention, he gives as follows:

Digitized by Google

"As herein illustrated, a flooring constructed according to my invention consists, essentially, of a panel concrete having *metallic network* encased therein so as *to radiate from the posts* on which the floor rests.

"The metallic network of my flooring is formed by strips of suitable wire-netting. In practice I have used a hog wire fencing, which is a fencing of the same class as ordinary poultry wire fencing, except that the same is made of considerably heavier wire.

"In laying a floor constructed according to my present invention the posts are first erected, and a temporary staging is built up level with the tops of the posts. Strips of wire-netting are then laid closely in place on top of the staging. In practice I have laid this wire-netting *in straight lines from post to post and also crossing diagonally from post to post. A number of layers* of this wire-netting *are preferably employed, said layers being laid together at their crossing points in cob-house fashion, the number of such layers depending on the thickness of the floor, the weights to be supported, and the distance separating the posts.* The concrete is then spread upon or moulded in place on the staging to enclose the metallic network.

* * * * * * * * * *

"In a completed flooring constructed according to my invention it will be seen that instead of resting or hanging a flooring in place upon beams or girders the flooring rests upon separated posts or other supports and consists of single concrete panel having a wire network enclosed therein in proper position to support the tensile strains, the concrete itself on account of its well known crushing strength having abundant strength for resisting all possible compressions—that is to say, if the forces acting upon a section of flooring supported between two posts be analyzed it will be found that the tendency of the floor section to sag between its supports will cause the lower layers of the flooring to be under tension while the upper layers of the flooring are under compression, these strains being of course greatest at the top and bottom layers, respectively, and diminishing to zero at the neutral axis near the center of the flooring. In addition to this the weight of a section of flooring causes a shearing strain at its line of contact with its supports.

"The principle upon which I have worked in constructing my flooring is to permit concrete alone to resist compressions and to supply a maximum amount of metal at points where the flooring is to be subjected to greatest tensions and shearing strains. In carrying out this principle in some instances—for example, *where there are wide spans between adjacent posts*—I have employed a greater number of layers of wire-netting near the center of the span than at the ends of the span, the distribution of the metal in any one span following substantially the same rules that would be followed in distributing metal in the construction of flat arches, *in all cases the distribution of the metallic network in the flooring being carefully calculated and varied according to the columnation of the building, the thickness of the flooring, and the weights to be sustained.*"

The accompanying diagrams show the principle and mode of operation of the Norcross girderless flooring and the Turner mushroom flooring. To these diagrams must be added the explanation, that the metal reenforcement of Norcross comprises strips of heavy wire netting (not wire rods as the design seems to indicate), while the reenforcement of Turner is made up of strips or a multitude of steel rods (concededly interchangeable equivalents in reenforced concrete work of this character). The further explanation should be made, that the two diagrams were prepared by the defendant for comparison at the hearing, and, that, while the diagram of Turner is a faithful presentation of the patent disclosure, the diagram of Norcross, though it discloses accurately the Norcross principle, is rather closer to Turner in appearance and detail than is the diagram in the Norcross patent.

Digitized by Google

NORCROSS GIRDERLESS FLOORING
(Patent No. 698,542)

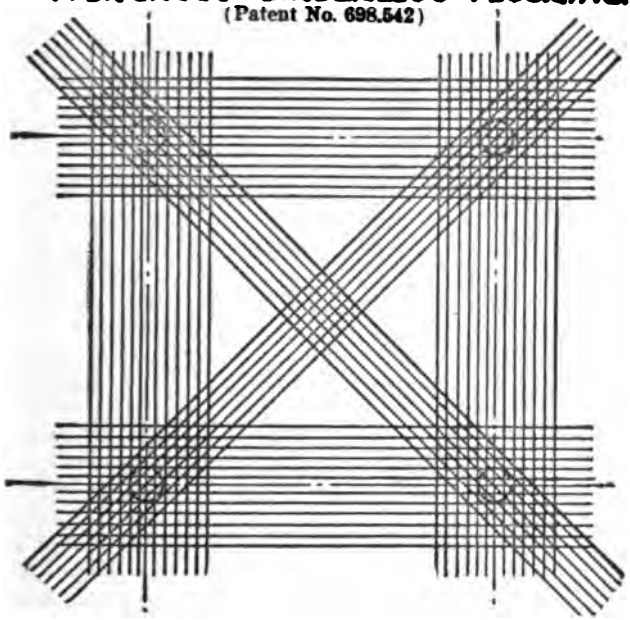

TURNER MUSHROOM SYSTEM
(Turner Patents in Suit
No. 985,119 and No. 1,003,384)

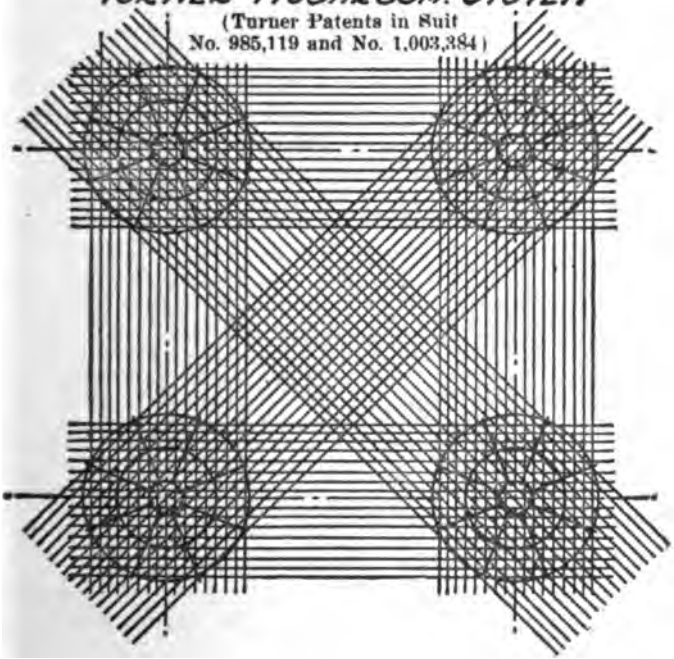

Digitized by Google

As the essential principle of Turner's invention, aside from its cantilever feature, is the arrangement of steel reenforcement criss-cross or crosswise the space between supporting columns, designed to take up strains coming in all directions, it is apparent that its original conception is found in Norcross. If Turner had limited his invention to metal rods or layers of metal rods laid directly and diagonally between the posts or columns in number and position "calculated and varied according to the columnation of the building, the thickness of the flooring, and the weights to be sustained," he clearly would have been anticipated by Norcross. But Turner, while not denying very successfully that he got from Norcross the idea of a crosswise or network reenforcement for the span between supporting columns as an element of his construction, claims that he departed from Norcross in the location of the reenforcement network in the different planes of the slab. He maintains that in Norcross the reenforced network is laid flat on a staging over the heads of the pillars as well as over the spans between them, so that, when the concrete hardens and the staging is removed, the reenforcement will be found everywhere in the lower plane of the slab. And indeed, such would seem to be the reading of the Norcross patent. Just here, Turner claims that he introduced an element not found in Norcross' teaching. This comprises the cantilever head already described, located over the head of the column and situated in what becomes the upper plane of the slab when the concrete is poured in. From this head, steel reenforcement bars radiate in every direction and sag as they extend to similar cantilever heads on other columns. While no such arrangement appears in the Norcross patent, it is in evidence that substantially the same arrangement was practiced before Turner, not only in the art generally, but particularly in concrete girderless floorings. Witnesses testified that in his early work, Norcross, who was a contractor of large experience and engaged in extensive building operations, raised the metal where the belts crossed one another over the tops of the columns so as to bring it above the center of the slab. One witness testified that he assisted Norcross as early as 1899 or 1900 to construct and test a single panel of concrete flooring, which contained strips of wire netting extending along the sides and ends of the rectangle formed by eight outer posts and extending diagonally from these to the ninth post which was located near the center. He said:

"The posts were set up and then there was a floor laid under the whole space the slab was going to occupy, strong enough to hold it. We then laid down from post to post, always, at right angles to each other, pieces—we called it them days 'hog wire', which was a wire fence used to enclose territory to keep hogs; there was no reenforcing material made in them days. Then we laid on top of the floor, diagonally from post to post, the same material *until the whole space* was covered with this wire, *raising the wire over the posts and letting it hang as low as possible in the center of the slab.* After that the whole space was filled to the depth of about eight inches, as I remember, with cinder concrete. Over the posts we were careful to make a little richer mixture of concrete where the greater strain was coming."

It is clear from this, that in girderless concrete floor construction, Turner was not the first to raise the reenforcement over the support-

Digitized by Google

ing columns. It was done before, because it was the obvious thing to do in view of the known fact that over the supporting column the tensile strain comes in the upper plane of the slab. What Turner did and what his predecessors did was to put the reenforcement at the known point of weakness in the concrete.

When we go to the general art of reenforced concrete construction, which embraces reenforced concrete girders and beams, we find in nearly every instance of a patented invention involving an upright or a column support, the reenforcement placed in the upper plane of the concrete above the column where the tensile strain is bound to come; and in instances where there are two supports with an intervening span, reenforcement is placed in the upper plane above both supports and is permitted to sag off to the lower plane of the intermediate construction. That this practice was almost universal before Turner, is shown by many patents of which the following may be named: Seely (No. 467,141); Hallberg (No. 659,965); Hallberg (No. 659,-966); Hennebique (No. 611,907); Bossyns (No. 751,427); Perrot (No. 783,539); Ellinger (No. 702,093); Ellinger & Kopczynski (No. 729,299); Wight (No. 732,482). The upper plane reenforcement of the prior art, as shown by the few patents cited, contained the principle embodied by Turner in his construction, and named by him the cantilever principle.

From this very brief review of the art, it appears that Turner's construction comprises several elements. One is the criss-cross network arrangement of metal reenforcement; this is old in the art, and as employed by Turner, performs no new function. Another is the elevation of the metal over supporting columns by cantilever heads. Circumferential rings and struts or braces in the enlargement of column heads are old, and are found everywhere in the art. As they are employed by Turner, no new function is developed, unless it be, as he claims, in the circumferential characteristic of the cantilever head which permits reenforcement radially in every direction from which strains come. We are not impressed that this is a novel element involving invention, because, taking Turner's claim to invention even in its broadest scope, he did nothing more with his circumferential cantilever reenforcement than to do radially what the whole art had been doing lineally. While there is much testimony of a highly technical character concerning the particular strain carrying function of a cantilever, circumferential in shape, we do not believe that the circumferential shape creates a new function of the cantilever head involving invention, especially in view of the plaintiff's charge in this case, that the defendant's cantilever, which is rectangular in shape, is an equivalent of his circumferential cantilever and infringes it. The plaintiff's circumferential cantilever and the defendant's rectangular cantilever perform identically the same function in supporting and carrying metal reenforcement in multiple members and directions to the lower plane of intermediate plates, just as the cantilever in Hennebique and in many other constructions performed in single reenforcement of concrete structures. In other words, each

Digitized by Google

metal reenforcement rod in Turner, running above a column in the upper plane of the plate, then drifting to the lower plane in the intermediate plate, and then ascending to the supper plane as it approaches the next supporting column, performs separately and independently the same function that it performed in many inventions of the prior art. That there are many bars of metal reenforcement in Turner instead of a single bar or a few bars, and that they are placed crosswise instead of straightways, does not change the function which the bar reenforcement performs. Hence the idea of an aggregation of elements, each performing the same function when together that it performs when alone, has arisen and has been a constant difficulty with which Turner has had to contend whenever he has been called upon to sustain his patents.

In Turner v. Moore (D. C.) 198 Fed. 134, and 211 Fed. 466, 128 C. C. A. 138 (C. C. A. 8th), claims 1, 4 and 6 of the Turner divisional patent (No. 985,119) were held invalid as disclosing an aggregation. Claim 8 of that patent, which, with claim 4 is involved in this litigation, is not so different from claim 4 as to call for a different ruling. Both the divisional and parent patents were in litigation in Drum v. Turner (D. C.) 209 Fed. 854, and 219 Fed. 188, 135 C. C. A. 74 (C. C. A. 8th), in which the appellate court held that a construction substantially after the manner pointed out in the specifications of the two patents, was an infringement of claims 1, 3 and 4 of the Norcross patent (No. 698,542). In Turner v. Deere-Webber Bldg. Company (D. C.) 238 Fed. 377, claims 1, 2, 4, 6 and 8 of the divisional patent (No. 985,119) were held void for lack of invention in view of the prior art, and, if valid, not infringed.

[2] The trend of these decisions is that the patents disclose an aggregation, not invention. The plaintiff urges, correctly enough, that these decisions, while persuasive, are not binding on this court, and asks that this court find invention and hold the patents valid. In addition to the purely technical and scientific grounds which we have discussed, he points to the substantial success of the patented construction as evidence of patentable invention, and argues that it should turn the scale of doubt in his favor. But, after a very careful study of the immense record in this case, we find ourselves without serious doubt, certainly without such doubt as may be influenced by the consideration of commercial success of the subject matter of the patents. There doubtless is merit in Turner's system of concrete construction; it may be superior to other systems; but merit, and superiority even, may spring from a conception which does not involve invention. These qualities may come, as we think they do in these patents, from a careful assemblage of different elements from various sources and the clever combining of them. The union of the selected elements may be an improvement upon anything the art contains, but, if, in combining them, no novel idea is developed, there is no patentable invention, however great the improvement may be. American Laundry Machinery Mfg. Co. v. Troy Laundry Machinry Co. (C. C.) 171 Fed. 870; Id., 177 Fed. 1001, 100 C. C. A. 513; Dodge Coal Storage Co. v. N. Y.

Digitized by Google

C. & H. R. R. Co., 150 Fed. 738, 86 C. C. A. 404; Atlantic Works v. Brady, 107 U. S. 192, 2 Sup. Ct. 225, 27 L. Ed. 438; Hailes v. Van Wormer, 20 Wall. 353, 22 L. Ed. 241; Turner v. Moore, 211 Fed. 466, 469, 128 C. C. A. 138.

While the decisions adverse to Turner's patents are directed more against the divisional than against the parent patent, yet, as the same principles are involved in both, the reasoning of the decisions is applicable to both. We find ourselves in accord with this reasoning, and hold that the claims of both patents here in issue are invalid for lack of invention in view of the prior art.

This decision makes unnecessary a consideration of the motion to dismiss. The decree below is

Affirmed.

(248 Fed. 939)

VANMANEN v. LEONARD et al.

(Circuit Court of Appeals, Sixth Circuit. January 8, 1918.)

No. 3018.

1. PATENTS ⟹328—INFRINGEMENT—WAREHOUSE TRUCK.

The Vanmanen patent, No. 988,677, for a warehouse truck, claim 4, *held* not infringed by a modified structure built by defendants after a decree finding their original trucks infringed.

2. PATENTS ⟹168(2)—CONSTRUCTION—LIMITATION BY PROCEEDINGS IN PATENT OFFICE.

An inventor's acquiescence in the rejection of a broad claim, and his acceptance in its place of one distinctly limited, estops him from thereafter seeking the benefit so surrendered; and this regardless of whether the Patent Office was right or wrong in rejecting the original claim.

Appeal from the District Court of the United States for the Western District of Michigan; Clarence W. Sessions, Judge.

Suit in equity by William Vanmanen against George Leonard and Nicholas Bouma. From the final decree, complainant appeals. Affirmed.

L. V. Moulton, of Grand Rapids, Mich., for appellant.

Geo. Leonard and Nicholas Bouma, both of Freeport, Mich., pro se.

Before WARRINGTON, KNAPPEN, and DENISON, Circuit Judges.

WARRINGTON, Circuit Judge. This is a suit for infringement of patent No. 988,677, issued to appellant William Vanmanen April 4, 1911, and relating to improvements in warehouse trucks. Upon the usual issues in such cases the patent was held valid, and claim 4 infringed, though claims 1, 2, and 3 were held not infringed, and an interlocutory decree for injunction and accounting was entered accordingly. The master reported separately profits and damages on two

---

⟹For other cases see same topic & KEY-NUMBER in all Key-Numbered Digests & Indexes

Digitized by Google

sets of trucks, the first set comprising 322 and the second 50, but held that both sets infringed claim 4; the court affirmed the ruling touching the first set, but reversed it as to the second. The appeal concerns only the latter set of trucks; they are called "modified" structures.

[1] It is to be inferred, from testimony introduced before the master and from the master's report, that after the order of injunction was entered the defendants made a distinct change in the construction of their trucks, and that at the time of the accounting they had sold as many as fifty trucks of the modified form. This presents the question whether the modified structure infringes claim 4:

"In warehouse trucks, a metal top, sides integral with and bent down at right angles with the top, with the lower edges channeled to provide rigidity, end rails secured to the top and sides, and a supporting beam extending the length of the truck and secured to the end rails, in combination with necessary caster supports and stake sockets secured to the sides and end rails."

The change involved in the modified structure concerns the "supporting beam" called for in this claim. In the opinion allowing the injunction and accounting the trial judge described the device shown by the evidence and claimed in the patent as consisting of—

"* * * the elements of a sheet of metal bent to form the top and sides, end plates secured to the same and bent at the middle to form caster sockets, a center beam and means for securing the beam to the end plates."

The infringing device which was then under consideration seems to have contained all these elements. The modified structure, however, omits the "center beam"; and the present importance of this omission may be further seen in the specification, where, in speaking of the liability of a truck to warp, the patentee says:

"To avert this danger I place a heavy wooden beam or brace, as *F*, or a pair of cross-braces, as *F'*, in position to engage both ends of the truck. I prefer the use of a single beam, as shown in Fig. 1, as it is much less expensive, more readily applied and equally as reliable as the cross-beams shown in Fig. 2."

And the preference thus given to the single beam finds expression in claims 1, 2, and 3, as well as 4, of the patent. In place of the single beam, as also of the cross-braces, the defendants in their modified structure employ three beams located in the central portion of the truck frame, two disposed transversely to the truck with their ends fastened to the sides of the truck frame, and the other longitudinally thereto, with its ends fastened in turn to the transverse beams midway of their length, and also two iron rods, disposed one on each side of, and fastened in the same manner as, the longitudinal beam, but each equidistant between it and the corresponding side of the truck. Thus in the modified structure beams are fastened only to the *sides*, while in the patent the beam is connected only with the *ends*, of the truck frame, to strengthen the truck.

[2] It is insisted that such a difference does not avoid the patent. It must be conceded that this would ordinarily be true; but in this

Digitized by Google

instance the patentee materially limited the scope of his invention in the Patent Office. The application in its original form contained five claims. The last two claims were as follows:

"4. A warehouse truck made of sheet metal and having beams connected therewith in such a manner as to avert the danger of the truck warping out of shape under load.

"5. A warehouse truck made of sheet metal, stake sockets and caster sockets formed at the ends of the truck, and beams secured to and extending from end to end of the truck in position to render the truck rigid and not liable to warp under load."

The claims were all rejected on the ground that in the opinion of the examiner they were "substantially anticipated in the patent to Dietz, 564,740, July 28, 1896, trucks." The applicant urged in answer that he avoided the Dietz patent by the fact, among others, that the applicant did not "carry the beams near the sides of the truck." However he directed the examiner to cancel original claims 4 and 5 and substitute the present claim 4. Comparison of the original with the present claim 4 shows that the patentee is now claiming the benefit of the very feature he surrendered in the Patent Office. He there sought to avoid the Dietz patent, as we have seen, on the ground that he did not carry his beams "near the sides of the truck," while he now insists that defendants' modified structure infringes the present claim 4, despite the fact that its beams do not connect with the ends, but only with the sides. The case thus falls within the well-settled rule that an inventor's acquiescence in the rejection of a broad claim, and his acceptance in its place of one distinctly limited, estop him from thereafter seeking the benefit so surrendered; and this, too, regardless of whether the Patent Office was right or wrong in rejecting the original claim. Morgan Envelope Co. v. Albany Paper Co., 152 U. S. 425, 429, 14 Sup. Ct. 627, 38 L. Ed. 500; Garland v. Quinn, 242 Fed. 267, 270, 155 C. C. A. 107 (C. C. A. 6); Ventilated Cushion & Spring Co. v. D'Arcy, 232 Fed. 468, 470, 146 C. C. A. 462 (C. C. A. 6); Ventilated Cushion & Spring Co. v. D'Arcy, 229 Fed. 398, 406, 143 C. C. A. 518 (C. C. A. 6), and citations; Winchester Repeating Arms Co. v. Peters Cartridge Co., 184 Fed. 333, 335, 106 C. C. A. 363 (C. C. A. 2); Marshall & Stearns Co. v. Murphy Mfg. Co., 199 Fed. 772, 776, 118 C. C. A. 362 (C. C. A. 9). In Arnold-Creager Co. v. Barkwill Brick Co., 246 Fed. 441, 444, 158 C. C. A. 505, we have recently held that an express claim limitation to the "end" of a structure could not be escaped upon the theory that the "side" is generally the equivalent of the end. It is true that was a case of voluntary, not compulsory, limitation; but, after it appears that the patentee intended a specific interpretation, the ultimate principle is the same. Nevertheless it is earnestly contended that to limit claim 4 closely to the full equivalent of the specific structure which it, in connection with the specification and drawings, describes, is to render the patent worthless. The logic of the argument would reject interpretation of the patent, and lead to a judicial grant; the argument, moreover, totally ignores the responsibility of the patentee for the limitation placed upon the scope of his patent.

Digitized by Google

We therefore agree with Judge Sessions in holding that claim 4 was not infringed by defendants' modified structure, and so we affirm his decree. His opinion on this subject follows:

"Plaintiff's patent is very narrow and limited in scope and must be confined substantially to the structure therein described. One of the essential elements of claim 4 of the patent is 'a supporting beam extending the length of the truck and secured to the end rails.' Defendants' so-called 'modified structure' lacks this essential element, and therefore does not infringe. The profits and damages based upon the manufacture and sale of the 50 machines of this 'modified structure' have been improperly allowed by the master. Defendants' exception in this regard is sustained, and $54.65 will be deducted from the profits and $69 from the damages found and awarded by the master. Otherwise the findings of the master are approved and affirmed, and the exceptions thereto overruled.

"The facts of this case justify increased damages; but by the allowance of both profits and damages upon the manufacture and sale of the same machines the actual damages have been sufficiently increased.

"A decree will be entered in favor of plaintiff and against the defendants for the sum of $769.27, with costs."

Digitized by Google

(249 Fed. 1)

ALEXANDER et al. v. FIDELITY TRUST CO. (three cases).

FIDELITY TRUST CO. v. ALEXANDER et al.

(Circuit Court of Appeals, Third Circuit. November 24, 1917. On Rehearing, March 27, 1918.)

Nos. 2277-2280.

1. TRUSTS ⟹305—ACCOUNTING—LACHES.

Where complainants' father, who held in trust for their benefit the proceeds of land devised in trust for them by their maternal grandfather, and was, under the terms of the will, entitled to withhold distribution during his life, complainants' failure to demand an accounting during the lifetime of their father, the latter having recognized the existence of the trust up to the time of his death, did not amount to laches precluding the enforcement of their rights against the executor of the father's estate.

2. TRUSTS ⟹305—ACCOUNTING—LACHES.

Two years after the death of their father, in 1895, complainants made demand on defendant, executor of the estate of the father, for settlement of a trust created for complainants' benefit by their maternal grandfather and recognized by the father at the time of his death. Meanwhile one of the complainants had filed a caveat against the probate of the will, and, though defeated in the lower court, appealed to the Supreme Court, wherein the will was upheld by a decision rendered in 1903. In 1899 complainants secured the appointment of a substituted trustee under the will of their grandfather, which trustee that year sued defendant for an accounting. Defendant then filed a bill for vacation of the appointment of such trustee, and the suit for accounting was not disposed of pending determination of the proceeding for vacation of appointment of the substituted trustee. *Held*, that where complainants, a few months after the vacation of the appointment of the substituted trustee, filed a bill for an accounting, they were not guilty of laches precluding recovery, though 18 years elapsed between the death of their father, the original trustee, and the filing of such bill, complainants' demands on defendant executor and institution of suit by the substituted trustee having fully advised it of complainants' claim, so that defendant, which required a refunding bond as a condition to distribution, was not injured by the delay.

3. TRUSTS ⟹291—PAYMENT—SETTLEMENT.

A father, who was trustee for his children under a trust created by their maternal grandfather, cannot, by making bequests to them by will in lieu of accounting for the trust property which he commingled with his own, discharge his liability as trustee, the children not being bound to accept the proposed bequests any more than they would have been

⟹For other cases see same topic & KEY-NUMBER in all Key-Numbered Digests & Indexes

Digitized by Google

bound in the lifetime of the father to have accepted a sum of money in satisfaction of their rights as beneficiaries.

4. ABATEMENT AND REVIVAL ⟹14—PENDENCY OF OTHER SUIT—EFFECT.
Complainants' father, a citizen of Pennsylvania, was by the will of their maternal grandfather made trustee of a trust for complainants' benefit. After the death of the father a Delaware corporation was appointed as substituted trustee under the will of complainants' maternal grandfather, and such trustee instituted an action in the federal court against defendant, a Pennsylvania corporation, and executor of complainants' father. On petition of defendant, the order appointing the substituted trustee was revoked; whereupon complainants, nonresidents of Pennsylvania, filed a bill in their own names against defendant for an accounting. *Held* that, if defendant was injured by the pendency of the suit by the substituted trustee, it should move for a dismissal thereof, and was not entitled to a dismissal of the bill by complainants.

5. EXECUTORS AND ADMINISTRATORS ⟹47—ASSETS—DISTRIBUTIVE SHARE.
The shares of deceased beneficiaries under a trust are distributable to their administrators, and, in a suit by a surviving beneficiary, the question whether the shares of such deceased beneficiaries descended to the survivors need not be determined.

6. TRUSTS ⟹305—ACCOUNTING—RIGHT TO—COMMINGLING OF ESTATES.
Where a trustee, without the consent or knowledge of the beneficiaries, commingled trust funds with his own, but up to the time of his death recognized the validity of the trust and his liability to account, his executor cannot defeat a suit by the beneficiaries to compel an accounting, no rights of any third persons having intervened; for the trustee, by commingling the trust funds with his own, rendered his whole estate liable to the beneficiaries.

7. EVIDENCE ⟹60—PRESUMPTIONS—INNOCENCE.
Where the act of a party may refer indifferently to one of two motives, the law prefers to refer it to that which is honest rather than to that which is dishonest.

8. TRUSTS ⟹305—COMMINGLING OF TRUST FUNDS—PRESUMPTION.
Where a trustee commingled trust funds with his own and entered credits to the cestui que trust on his books, the presumption is that the trustee intended the joint fund to be chargeable with the trust, and casts on the trustee or his representative the burden to show clearly what part of the property belongs to his own estate.

9. JUDGMENT ⟹590(1)—DETERMINATION—RULE OF DECISION.
In a suit to compel the executor of a deceased trustee to account, a decision, in a previous suit to compel the executor to account for property held by the deceased under a different trust, that the beneficiaries having allowed the administration to proceed and the trust res to be disposed of and distributed before they instituted suit, they were not entitled to invoke equitable aid to recover the value of the property or the accumulations, having an adequate remedy at law, does not amount to a rule of decision precluding a decree directing an accounting by the executor, where the testator in the latter case had commingled the trust funds with his own, and the beneficiaries had at all times since his death been asserting their rights to an accounting.

10. TRUSTS ⟹305—ACCOUNTING—ACCEPTANCE OF BENEFITS—EFFECT.
That a testator, who was trustee of a trust created by his son's maternal grandfather, in which the son was a beneficiary, made bequests to his son, which his will stated were to be accepted in lieu of any right of accounting, will not preclude the son from enforcing an accounting by testator's executor, where the son attacked the validity of the will and refused to accept any benefit thereunder.

⟹For other cases see same topic & KEY-NUMBER in all Key-Numbered Digests & Indexes

Digitized by Google

11. COURTS ⟹505—STATE AND FEDERAL COURTS—EXECUTION.
In a suit in the federal court against defendant, a corporate executor, to compel it to account for trust property which its testator as trustee commingled with his own funds, there was a decree for complainants directing an accounting. The testator's estate was at the time of the rendition of the decree still in progress of settlement in the state court. *Held*, that notwithstanding the usual rule that in suits against an executor the law presumes that he has a sufficiency of assets in his hands belonging to his testator with which to pay the judgment or decree against him, unless he pleads complete administration or that he has only assets to a limited extent, etc., execution should in the first instance be denied, so as to allow presentation of the decree to the state court.

12. WILLS ⟹787—ELECTION—EFFECT.
Where a beneficiary under the will of one who was a trustee elected to take a bequest which the will stated should be in full payment of any demands for which the testator was liable as trustee, such elec' n is binding on the beneficiary, and she cannot compel the testator's executor to account for trust property in his hands.

13. EVIDENCE ⟹271(18)—EX PARTE DECLARATIONS—ADMISSIBILITY.
An ex parte statement by a trustee in his own book that he had paid one of the beneficiaries is not admissible in an action by the beneficiary to compel his executor to account.

14. TRUSTS ⟹305—ACTIONS—PAYMENT OF BENEFICIARY.
In a suit against the executor of a trustee to compel an accounting for trust property which the trustee commingled with his own property, where there was nothing to show that one particular beneficiary had been paid, it appearing that the trustee recognized the existence of the trust up to the time of his death, the claim of such beneficiary must prevail.

On Petition for Reargument.

15. APPEAL AND ERROR ⟹828—REARGUMENT—GRANTING OF PETITION.
Where petitioner would be affected by the decree appealed from, though he was not named therein, and, had he then asked, he would have been heard when the appeals were originally argued, his petition for reargument will be granted, to avoid a possible injustice; it appearing that he had no record notice of the appeals.

Appeal from the District Court of the United States for the Eastern District of Pennsylvania; J. Whitaker Thompson, Judge.

Bill by Archibald A. Alexander, Mary C. Alexander, and John S. Alexander against the Fidelity Trust Company, executor of the estate of John Alexander, to compel an accounting. From a decree in favor of Archibald A. Alexander, but denying relief to the other complainants, the trustee and Mary C. Alexander and John S. Alexander severally appeal, while Archibald A. Alexander appeals from an order supplemental to the decree, staying execution thereon. Affirmed as to the appeals of all parties save John S. Alexander, and as to him reversed and bill reinstated with directions.

See, also, 243 Fed. 162, 156 C. C. A. 28.

M. Hampton Todd, of Philadelphia, Pa., for appellants.

H. Gordon McCouch and Harold B. Beitler, both of Philadelphia, Pa., for appellee.

Before BUFFINGTON, McPHERSON, and WOOLLEY, Circuit Judges.

Digitized by Google

McPHERSON, Circuit Judge. Federal jurisdiction of this action depends upon diversity of citizenship. The bill was brought by Archibald A. Alexander, Mary C. Alexander, and John S. Alexander against the Fidelity Trust Company as executor of their father, John Alexander, to compel an account of a certain trust. The fundamental averments of the bill are that John Alexander had been a trustee for the plaintiffs, that he had not accounted for the fund, but had left it as an indistinguishable part of his estate, and that his executor was in possession of assets sufficient to respond to the plaintiffs' demand. In full detail the facts appear in the following unreported opinion of Judge Thompson, delivered August 26, 1915:

"The plaintiffs filed a bill for an accounting by the Fidelity Trust Company, as executor and trustee under the will of John Alexander, deceased, of moneys received by the decedent, John Alexander, as trustee for the plaintiffs under the will of George Jones, deceased. The Fidelity Trust Company alone filed an answer and put in a defense.

"George Jones, a resident of Wilmington, Del., died in August, 1867. John Alexander married George Jones' daughter, Mary Jane, who died prior to the time of George Jones' death, leaving five children, Mary C., John S., Archibald A., still living, and James G. and Annie G. Alexander, both deceased.

"The second item of George Jones' will is as follows:

" 'To my Son in Law John Alexander and his heirs and assigns I give and devise all my farm land in Kent County in this State, in Trust for the Equal use, benefit and behoof of his children by my daughter Mary Jane (now deceased) with authority to retain and manage it for their respective Equal benefit, or at his option at any time to convey and assign the same to them and their heirs as Tenants in Common free and discharged of any trust or, with the assent to be expressed in writing, of such of the said children as may at the time of the Exercise of such option, have attained twenty-one years of age, to sell and dispose of the said lands and tenements, at public or private sale for the best price to be obtained therefor, and thereupon to make a good and sufficient deed or deeds in fee simple therefor to the purchaser or purchasers thereof, free from all Trust and any liability of the purchaser or purchasers to see to or account for the proper application of the purchase money by the said John Alexander or his heirs; the said purchase money thereupon to be still held in Trust by him or them for my said Grandchildren, or at his discretion, to be paid over to them respectively discharged of any Trust, at such times and manner as he shall deem most beneficial to them respectively.'

"Letters of administration were granted to John S. Alexander upon the estate of James G. Alexander, December 22, 1868, and upon the estate of Annie G. Alexander, November 4, 1899.

"After the death of George Jones, the decedent, John Alexander, remarried and had one son, Lucien H. On March 27, 1868, John Alexander, together with Mary C., John S., and Annie G., all of whom had then reached the age of twenty-one years, sold the real estate in Kent county, known as Linden Farm, to Henrietta Ord Underwood, for the sum of $13,000. The purchase price was paid to John Alexander as follows: $10,000 by the assignment to him of a bond and mortgage of John P. McLear and wife to Henrietta Ord Underwood to secure the payment of the sum of $10,000 and the remaining $3,000 by a purchase-money mortgage upon Linden Farm in the sum of $3,000. John Alexander sold the McLear mortgage March 18, 1872, for $10,000, together with the interest due thereon, the proceeds in all exceeding $12,000. The decedent, on March 28, 1873, charged himself as trustee, and credited the accounts of Archibald and Mary, respectively, with the sum of $4,026.91 each. It is conceded that settlement in the sum of $4,026.91 in full for his share of the proceeds of the McLear mortgage under the George Jones trust was made at that time by the decedent with his son John S. Alexander. The Underwood mortgage for $3,000 was sued out in proceedings brought in 1884,

Digitized by Google

and the land was purchased at the sheriff's sale by John Alexander in his own right for the sum of $6,500 and a deed made to him by the sheriff. The title to the property remained in John Alexander at the time of his death. John Alexander continued to recognize the George Jones trust and his liability to account under it down to the time of his death. This is shown by entries in his book and by declarations in wills made in 1891 and 1893. In a will executed June 26, 1891, by item 4 he directed his executors (in case he did not do the same thing in his lifetime) to transfer to the Fidelity Insurance Trust & Safe Deposit Company, in trust for his daughter Mary, certain securities, and, in case he did not do the same thing in his lifetime, to transfer to his son Archibald certain securities and the proceeds of a certain life insurance policy, with the following clause applying to both bequests: 'Which transfers include payment in full to my daughter Mary C. and my son Archibald A. of their interest in bequest of their Grandfather.'

"In an entry in his ledger under the date of January 13, 1887, he had enumerated the same securities referred to in the will of 1891, and directed that his executors transfer them to Mary and Archibald, respectively, at his death in case he had not done so in his lifetime.

"The testator further directed that reference be made to the memoranda accounts of his children to ascertain whether the transfers referred to had been made in his lifetime. It is apparent that his intention in item 4 of the will of 1891 was to designate the funds held by him in trust, and, as far as Mary and Archibald were concerned, to carry out the directions of George Jones under the last clause of item second of his will, viz.: 'The said purchase money thereupon to be still held in trust by him (John Alexander) or them for my said grandchildren, or, at his discretion, to be paid over to them respectively discharged of any trust, at such times and manner as he shall deem most beneficial to them respectively.'

"In a subsequent will dated March 15, 1893, which was duly probated, in the fourth paragraph he again recognized his liability to account for the George Jones trust by directing his executors, in case he had not done the same thing in his lifetime, to pay over to the Fidelity Insurance Trust & Safe Deposit Company for his daughter Mary C. the sum of $15,000, to be held in trust with power of appointment in her by will; and further directed his executors, in case he had not done the same thing in his lifetime, to transfer to his son Archibald certain stock, certain interest in joint indebtedness declared against his sons Archibald and John S., and the proceeds of a certain life insurance policy, and declared 'these payments and transfers include payment in full to my daughter Mary C. and my son Archibald A. of their interest in bequest of their grandfather Jones.'

"He further provided in item 4: 'As my devoted son John S. has years ago received from me his share of his grandfather Jones' estate, and has also been released from certain large cash liabilities to me, I bequeath in this item of my will only to my children Mary C., Archibald A., and Lucien H., and I have, according to my best judgment, done the strictest equity to all.'

"The existence of the George Jones trust at the time of John Alexander's death, and his recognition of his liability to account to Mary and Archibald, is therefore clearly established by the testator's declaration.

"During the lifetime of John Alexander, he had advanced and loaned large sums of money to his sons, which appear charged against them on his books. In the will of 1893, item 8, he states that the advances to his two sons John S. and Archibald A. amount to $115,100, 'a portion of which indebtedness to the extent of ($6,000) Six thousand dollars thereof I have by Section Four of my Will bequeathed to my son Archibald A., which leaves at this date as forming part of my residuary estate a net balance of indebtedness due by my said two sons of One hundred and nine thousand one hundred dollars ($109,100), whereby my said two sons have jointly received possibly more than their just share of my residuary estate.' The amount of the indebtedness was by a codicil declared to be $121,800.

"The accounts with Mary upon her father's books do not indicate any intention on his part to charge against her share in the George Jones trust any individual advances made to her. The individual accounts of Archibald

Digitized by Google

upon his father's books, as far as appears, show loans and advances made by his father in his individual capacity, and do not indicate any intention to charge them against the fund held as trustee. The declarations in the wills of 1891 and 1893 indicate that up to that time no settlement of the Jones trust estate had been made, but that John Alexander intended by his bequest, in item 4, to charge against the shares of Mary and Archibald under the Jones trust in settlement thereof the money and securities therein enumerated.

"It is evident from the books of the decedent and conceded by all parties in interest that there was a commingling of the trust funds with his individual funds, but there is no evidence that at the time advances were made in his lifetime it was intended by the parties that they should be considered as advances out of the trust funds.

"Upon the death of John Alexander on February 7, 1895, the will of March 15, 1893, with codicils thereto, was offered for probate. A caveat and petition for an issue filed by Archibald A. Alexander were, after hearing before the register of wills of Philadelphia county, dismissed, and the will and codicils admitted to probate. In October, 1898, John S. Archibald and Mary appealed to the orphans' court from the decision of the register of wills, and, after lengthy hearing, the appeal was dismissed and an issue d. b. n. refused. From the action of the orphans' court an appeal was taken to the Supreme Court of Pennsylvania, whereupon, on May 11, 1903, the decree of the orphans' court was affirmed. See Alexander's Estate, 206 Pa. 47, 55 Atl. 797. Meanwhile, on June 15, 1899, upon petition of Mary C. Alexander and John S. Alexander, the Court of Chancery of Delaware appointed the Security Trust & Safe Deposit Company of Delaware substituted trustee under the last will and testament of George Jones. The substituted trustee on December 12, 1899, filed in the United States Circuit Court for this district to No. 29 of October sessions, 1899, a bill in equity against the executors of John Alexander's will, alleging substantially the same facts, so far as the right to an accounting is concerned, as are set forth in the present bill, and praying for the same relief as in the present bill. After the suit was at issue, a motion made to dismiss for want of jurisdiction was held under advisement by Judge McPherson pending a suggestion that the construction of the will should be primarily determined by the Delaware Court of Chancery, and the question of the propriety of the complainant's appointment raised in that court. On April 13, 1905, a bill was filed in the Delaware Court of Chancery by the Fidelity Trust Company, as executor and trustee under the will of John Alexander, praying that the appointment of the substituted trustee be vacated. A decree was finally entered on October 10, 1912, revoking the order appointing the Security Trust & Safe Deposit Company as substituted trustee as having been inadvertently entered.

"On January 7, 1913, the present bill was filed.

"It appears by the answer that repeated demands were made by the plaintiffs upon the defendant for the sums in controversy and for an accounting more than sixteen years prior to the filing of the bill herein, and a denial of all liability for the payment of any such sums or of any obligation to account therefor was then made by the defendant.

"The first account of the executors was audited in the orphans' court April 17, 1896, and confirmed nisi, and adjudication filed April 30, 1896. It appears by the adjudication and schedule of distribution that $15,000 was awarded to the Fidelity Insurance, Trust & Safe Deposit Company as trustee for Mary C. Alexander under the trust declared in the fourth item of the testator's will. It further appears that payments of $1,107.50 of income had been made by the accountants to the Fidelity Trust Company, which are referred to in the schedule as 'payments on account interest to May 16, 1896, on Mary C. Alexander bequest of $15,000, in accordance with fourth item of will as per account filed.'

"It also appears that at that time there was contained in the schedule of distribution an award to Archibald A. Alexander of 100 shares of stock of the Texas National Bank, and of an assignment of $6,000 of the testator's interest in the joint indebtedness due to the estate by his two sons, Archibald and John S. As the account then being audited was that of the executors

Digitized by Google

under the will, and not of the Fidelity Trust Company as trustee for Mary C. Alexander, it is apparent that the payments of income charged in the account consisted of income paid by the accountants as executors to the Fidelity Trust Company as trustee. There is no evidence of any payment directly to Mary C. Alexander, or acceptance by her, of any income out of the $15,000 bequest, and there is no evidence of any acceptance by Archibald A. Alexander of the bequest to him in settlement of his interest in the George Jones trust.

[1] "The defense mainly relied upon is laches, in that the trust determined on the death of John Alexander and the beneficiaries thereunder were then entitled to sue therefor; that sixteen years prior to the filing of the bill repeated demands were made by the plaintiffs for an accounting and a denial of all liability made by the defendant, and that, in view of the laches of the plaintiffs, forty-two years having elapsed since the alleged tortious conversion of the trust fund and failure to pay income to those entitled, and eighteen years having elapsed since the death of the testator and the filing of the bill, they have lost their right to an account and the bill should be dismissed.

"Under the facts developed, laches cannot be imputed to the plaintiffs based upon their failure to claim an accounting during the lifetime of their father. There was no disavowal by him of the trust, and up to the date of the will of 1893, and therefore to the time of his death, he never disavowed his liability to an account, but, by his own declarations in his books of account and in the wills of 1891 and 1893, declared the continued existence of the trust and his liability to an accounting.

[2] "Neither can laches be charged against the defendant by reason of the fact that the bill was not filed until January, 1913, or eighteen years after the death of the testator. That is an unusually long period to elapse before the assertion of one's right, and, if nothing had been done during that interval, the defense of laches would doubtless avail even in favor of a fiduciary. It is admitted, however, that demand was made by the plaintiffs for an accounting in 1897. Meanwhile a caveat against the probate of the will under which the defendant claimed as executor had been filed, and in 1898 an appeal taken to the orphans' court. In 1899 a substituted trustee was, upon the application of two of the plaintiffs, appointed by the Delaware Court of Chancery for the purpose of asserting the same rights as are now asserted by this suit. In 1899 the substituted trustee brought suit in the Circuit Court in this district, based upon the same grounds as the present suit. By reason of litigation in Delaware concerning the appointment of the substituted trustee, the proceedings in the prior suit in this court were not carried to a conclusion, but, upon the vacation of the appointment of the trustee in 1912, the present bill was promptly filed. If the Fidelity Trust Company had had no notice of the trust, delay for a much shorter period would defeat the plaintiffs' rights upon the ground of laches, but the testator, by the terms of the very will under which the defendant derives its authority, declared the existence of the trust. The disavowal by the Trust Company upon demand two years later was followed by the proceedings brought in 1899, four years after the decedent's death. The Trust Company was not at that time in a position to assert that the beneficiaries under the George Jones trust were sleeping upon their rights, and surely it could not so claim during the pendency of that suit. If, during the time before the bringing of the present suit, the defendant has parted with the evidences of the condition of the trust, its position is not due to want of notice of the claims of the plaintiffs through their laches. It was not because of neglect to assert the plaintiffs' rights that the books of account in which the decedent kept the record of his dealings with the beneficiaries under his will had been allowed to go out of its possession and were brought into court in the custody of Lucien H. Alexander, who appeared and produced them under a subpœna duces tecum. At the audit of the second account of the executors, May 9, 1904, it was requested by counsel for the defendant that the sums awarded be retained by the accountant to await the result of the suit pending in the Circuit Court for this district brought by the Security Trust Company of Delaware, trustee, under the will of George Jones, against the executors. This request was denied because of uncertainty as to the length of time which would probably ensue before the final determi-

Digitized by Google

nation of the suit, but, in order to protect the accountant, distribution was made conditionally upon a refunding bond being entered into by the distributees, and it appears that the executor still has in its custody about $43,000 undistributed. Surely in 1904, when its counsel called the court's attention to the pending suit, the defendant had notice and would not have deprived itself of the means of defending that suit. So far as appears, the suit is still pending, but cannot be prosecuted, because the plaintiff's appointment as trustee under the George Jones will was, at the instance of the defendant, vacated in 1912, but the present suit was immediately brought after the order vacating the appointment was made. In the absence of the running of a statute of limitations, the doctrine of laches is invoked to prevent injury to an innocent party. It is doubtful if it should be applied as strictly in favor of a corporation engaged under its charter in the business of acting as executor and trustee as in favor of an individual. That the defendant has not, during the last eighteen years, been permitted by the plaintiffs to lose sight of the fact that they claimed as beneficiaries under the George Jones trust for sufficient intervals of time to bar them by laches is clearly apparent upon the present record, and no evidence has been presented to show that the defendant as a stakeholder will suffer by reason of being required to account.

[3] "The next defense set up is payment through advances to the plaintiffs, through their support by their father and through settlement made under his will. The capacity in which the decedent held the funds of the Jones trust was entirely separate and distinct from the capacity in which he dealt with his children in supporting them and in making advances to them. After a careful examination of the voluminous statements of account which were offered in evidence, I have been unable to find anything which indicates that, prior to the will of 1891, John Alexander intended that the liability of his sons and daughter to him individually should have any relation to his liability to them as trustee under George Jones' will. It is contrary to the ordinary conception of a trust that a trustee may offset his individual claim against his cestui que trust against the latter's claim upon the trust fund. It is apparent, however, that, under the wills of 1891 and 1893, the testator attempted to make a settlement under the trust with his son Archibald and daughter Mary. John Alexander could dispose of his individual estate as he desired, but he could not make a settlement with his children of the trusteeship as provided for in the wills without the consent of the cestuis que trustent evidenced by acceptance or in some other manner indicating their consent, express or implied. There is no evidence that Archibald ever consented to such arrangement, nor that he has accepted the provisions made for him under his father's will, and he is therefore free to dispute the effect of the bequest as a settlement with him. If there were evidence of the acceptance by Mary of income from the fund bequeathed to her under the fourth item of her father's will as such, she no doubt would be estopped from demanding an accounting in this suit. It has not been shown, however, that the payment to the Fidelity Trust Company as her trustee was followed by payment to her, and there is no evidence in the case, therefore, that she has accepted the benefits of the $15,000 bequest, as alleged in the answer, and the allegation, being deemed denied under the 31st equity rule, fails for want of proof.

"The claim of John S. Alexander was withdrawn by his counsel at the trial.

[4] "The question of jurisdiction raised by the defendant was determined by Judge Sater, sitting by designation in this court, when a motion to dismiss the bill upon that ground was denied. If the defendant is injured by the pendency of the suit of the Security Trust Company, it should, as suggested by Judge Sater, move for a dismissal of that bill.

[5] "A further question is raised by the pleadings as to whether the interests of James G. and Annie G. Alexander vested in their father, the decedent, or in their brothers and sister, the plaintiffs. The decision of that question is not necessary in the present suit, as in either case their shares would be distributable to their administrator.

"A decree may be entered in accordance with the prayers of the bill in favor of the plaintiffs Mary C. and Archibald A. Alexander, and dismissing the bill as to John S. Alexander."

Digitized by Google

After filing this opinion Judge Thompson heard additional testimony, which led him to conclude that Mary was not entitled to relief, and in March, 1916, he therefore ordered an account in favor of Archibald alone, dismissing the bill as to Mary and John S.:

"The additional evidence offered by the defendant the Fidelity Trust Company upon rehearing is sufficient to establish an acceptance by Mary C. Alexander of the bequests under her father's will, subject to the terms of the will providing that the 'transfers include payment in full to my daughter Mary C. and my son Archibald A. of their interest in bequest of their grandfather.'

"The additional evidence does not support the same conclusion as to Archibald A. Alexander, and no sufficient cause is shown for disturbing as to him the findings in the opinion filed August 16, 1915.

"As to the interest of John S. Alexander in the Jones trust, there is no evidence of any demand made by him upon his father for an accounting during his lifetime, nor is there any evidence to establish such a recognition by his father of accountability to him as appears by his declarations in regard to Archibald A. and Mary C."

Accordingly an account was stated by a special master (Hon. Wm. W. Porter), who in a clear and convincing report sustained the material positions of Archibald, and recommended a decree in his favor, the amount not being in dispute on this appeal. Exceptions to the report were dismissed in the following opinion (also unreported), and a final decree was entered:

[6] "As stated in the brief of counsel for the defendant:

" 'These exceptions all depend on the same underlying principle of law, which may be thus briefly stated:

" 'The Jones trust terminated on the death of John Alexander. No property belonging to the trust came into the hands of his executors, from which it follows that at no time since the death of John Alexander would a bill in equity lie against his executors for an accounting in reference to said trust, the only right of action being one at law against the executors for the tortious conversion by their testator of the trust funds in question. The status, therefore, of the beneficiaries after the death of John Alexander, was changed to that of ordinary creditors of his estate, from which it follows, as a corollary, that the executors have the right to set off against such claim any debts due by the beneficiaries to the estate, and the statute of limitations runs against this, as against any other action at law, from the date of the death of John Alexander.'

"Assuming that the trust terminated at the death of John Alexander, it does not follow that the cestui que trust's right to an accounting was then changed into a debt at common law.

"The fallacy in the argument for the defendant is that some controlling facts are left out of consideration.

"First. The trustee commingled the funds of the trust estate with his own, without the consent or knowledge of the fiduciary.

"Second. The decedent recognized the validity and existence of the trust and his liability to account therefor up to the time of his death.

"Third. The estate came into the hands of the defendant as John Alexander's executor in the same condition as it was in when he recognized his liability to an accounting.

"Fourth. There are no rights of creditors or purchasers for value or innocent third parties intervening.

"The master found against the defendant's contention that the entries in the books of John Alexander concerning the trust funds constituted a distribution to the beneficiaries, and found that such a disposition of the trust funds constitutes in law a conversion by him of the trust funds. Counsel for the defendant argues that therefore it must be concluded that there was no trust fund in existence when John Alexander died, and con-

Digitized by Google

sequently the beneficiary was merely a creditor of the deceased trustee's estate.

"Counsel has industriously collected authorities in support of the doctrine of failure of right to pursue trust funds commingled with other property. In every case so cited an equity superior to that of the cestui que trust was established, but in none of those cases is it held that a trustee who, without knowledge or consent of the cestui que trust, has commingled the trust funds with his own, can set up his own tortious conversion, and thereby establish a claim to the whole of the commingled property.

"In the following cases relied upon by the defendant the cestui que trust claimed a preference over the trustee's general creditors: Thompson's Appeal, 22 Pa. 16; People's Bank, 93 Pa. 107, 39 Am. Rep. 728; Freiberg v. Stoddard, 161 Pa. 259, 28 Atl. 1111; Lebanon Trust & S. D. Banks Assigned Estate, 166 Pa. 622, 31 Atl. 334; Comm. v. Tradesman's Tr. Co., 250 Pa. 372, 95 Atl. 574; Columbia Bank's Estate, 147 Pa. 422, 23 Atl. 625, 626, 628; Rado's Estate, 30 Pittsb. Leg. J. (Pa.) 410.

"And in Milligan's Appeal, 82 Pa. 389, the question was whether the trustee should be ordered to transfer to the cestui que trust certain valuable stock, purchased by the trustee out of commingled assets, instead of money. There was no evidence that the stock was purchased with her money; moreover, sufficient to satisfy the trust remained in the trustee's hands uninvested, and it was held that she was rightly awarded the money rather than the stock.

"It may be assumed that the industry of counsel would have produced authorities in support of his contention that the accountability of a trustee as against the cestui que trust ends when he commingles the trust funds with his own if there were such cases upon the books. The rule as to following trust funds, even where other equities are asserted, is thus stated by Mr. Justice Bradley in Frelinghuysen v. Nugent et al. (C. C.) 36 Fed. 229, and approved by Mr. Justice Fuller speaking for the Supreme Court in Peters v. Bain, 133 U. S. at page 693, 10 Sup. Ct. at page 361, 33 L. Ed. 696:

"'Formerly the equitable right of following misapplied money or other property into the hands of the parties receiving it depended upon the ability of identifying it, the equity attaching only to the very property misapplied. This right was first extended to the proceeds of the property, namely, to that which was procured in place of it by exchange, purchase, or sale. But if it became confused with other property of the same kind, so as not to be distinguishable, without any fault on the part of the possessor, the equity was lost. Finally, however, it has been held as the better doctrine that confusion does not destroy the equity entirely, but converts it into a charge upon the entire mass, giving to the party injured by the unlawful diversion a priority of right over the other creditors of the possessor.'

"The court's attention has not been called to any authority holding that, as against the cestui que trust, the trustee can set up his own failure to set apart trust funds, and say: 'I converted your money to my own use long ago by mixing it with my own. True, I have ample to pay you, which is the product of the commingled funds, but I do not know which is yours and which is mine. You did not consent that I should do so, nor did you know that I did so, but by converting it to my own use I made you a mere creditor and the statute of limitations has run against your claim.'

"As found by the master, the intent of the decedent to commingle the trust funds with his own was not one which the donor contemplated, nor the law sanctions, and cannot bind the cestui que trust without his consent or knowledge.

"What John Alexander did cannot be set up to the advantage of his estate to defeat the trust.

"'All that he did must be taken as in furtherance of the trust. To this he was bound by the duties of his office.' Paull v. Oliphant, 14 Pa. 350.

"In the case at bar it is shown that, while the trustee mingled the moneys of the trust estate with his own, it was done in recognition of the trust.

[7] "The finding by the master of the trustee's intention to postpone distribution under the discretion vested in him by George Jones' will until the time of his death is supported by the evidence, and is in accordance with

Digitized by Google

the maxim that, where the act of a party may be referred indifferently to one of two motives, the law prefers to refer it to that which is honest rather than that which is dishonest. Boone County Bank v. Latimer (C. C.) 67 Fed. 27.

[8] "The presumption is that in commingling the trust funds with his own, and crediting the cestui que trust on his books, John Alexander intended the joint fund to be chargeable with the trust funds, there being ample funds in the hands of his executor to meet the charge. So that where the two funds are thus blended, and the claim of the cestui que trust is not subject to any superior equities, the burden is put upon the trustee or his representative to show clearly what part of the property belongs to his estate. Perry on Trusts and Trustees, § 128; Boone County Bank v. Latimer, supra; Bank v. King, 57 Pa. 202, 98 Am. Dec. 215.

"It would be strange, indeed, if, with the presumption of a rightful intention on the part of the trustee to finally distribute the sums credited on his books to his son, and with the joint product of the commingled funds coming into the hands of the executor, the holder of the estate, thus enriched by the trust funds, should be allowed to defeat the trust by pleading a dishonest intent on the part of its decedent.

"What the plaintiff is claiming here is the right to follow his property or its value and the accrued profits into the product arising from the commingling of the trust funds with the mass of the decedent's estate.

"It was his right to elect to pursue this remedy, and an election to proceed as a mere creditor cannot be made for him by the defendant so as to invoke the statute of limitations and convert the trustee's individual dealings with him into a set-off and thus defeat the trust.

"I am of the opinion that there is no merit in the exceptions, and they will be dismissed, and the report confirmed.

"A decree may be entered accordingly."

Four appeals are before us, each presenting a separate question.

Fidelity Trust Company's Appeal.

[9] We see no need to supplement the careful and satisfactory opinions of the District Judge except by discussing briefly the Trust Company's contention that our decision dismissing the bill, that was considered in Fidelity Trust Co. v. Alexander, 243 Fed. 162, 156 C. C. A. 28, requires us to dismiss the present bill also. We think this position is not well taken. In the former case, which grew out of a family arrangement or trust in favor of the same beneficiaries, the fund then in question consisted of 60 shares of bank stock that had not been ear-marked, but formed a part of 319 shares that passed into the hands of the same executor. The beneficiaries had brought no action of any kind for about 20 years after they might have sued, and the only question before us was whether, under the circumstances there disclosed, they had lost whatever remedy in equity they might once have possessed. For a long time before the testator's death the stock had lost its identity, and the testator had apparently treated the trust fund as his own. In this respect the two cases are alike, but in the earlier case the trustee's will did not recognize the existence of the trust or propose a method of settlement. Before an account could be successfully demanded, the beneficiaries were obliged to prove the existence and survival of the trust, whereas in the present case the testator clearly recognizes the trust as existing, and empowers his executor to settle it, and the executor has accepted the authority, and has acted under it in part, as appears by the company's accounts in the orphans' court of Philadelphia county. It is a mistake to suppose that in 243 Fed. 162,

Digitized by Google

156 C. C. A. 28, we decided that the plaintiffs had never had a right to a remedy in equity. On the contrary, we assumed that they had not been confined to an action at law or to the proceeding in the orphans' court, "but could have proceeded in any other court having jurisdiction of the parties and the subject-matter"; but we laid weight upon the fact that they had taken no action of any kind until after the stock had been turned into money or had passed into other hands under the decree of the orphans' court. The point decided was that under such circumstances the claim against the estate had become a mere claim for the value of the stock and no longer needed a remedy in equity. No accounting was required, a mere calculation being sufficient. Since, therefore, the equitable remedy had not been invoked for so long a time, and had meanwhile become unnecessary, we held that the right to resort thereto had disappeared, and we restricted the plaintiffs to such other remedies as might remain, either at law or in the orphans' court.

In several particulars many of the cases now cited differ materially from the situation before us on this appeal, and therefore do not furnish the rule for decision. No conflicting rights of creditors or of purchasers for value are now involved; there is no dispute that the trust continued to the date of the testator's death, or that his estate became liable in some form of action; the assets of the trust certainly went into the executor's hands, although no one could point them out in specie, and the estate is amply solvent. In the fourth paragraph of his will the testator distinctly recognizes the trust and his liability, and in effect offers to settle with Mary and Archibald on specified terms. He had not settled with them himself, and he practically said to his executor: "I am bound to settle with Mary and Archibald for their shares of the Jones trust. The fund is somewhere in my estate; I do not know where, and I do not know how much I should pay them, but I propose to make a certain provision for each of them in full settlement of my obligation, and if they accept I leave it to you to carry the proposal into effect." No doubt he intended also to impose the settlement upon his children, but this was beyond his power. In substance, the proposal of the will had the same effect as if it had been made in his lifetime, and neither then nor after his death could he compel its acceptance. Under the trust he had exercised his right to postpone settlement until his death, but this left the task for his executor, unless the beneficiaries should see fit to accept the proposals in the will. Under such circumstances, we think a bill for an account was an appropriate, although perhaps not an exclusive, remedy, and we agree with the District Court that the present record shows no obstacle thereto.

[10] The Trust Company contends, however, that a serious obstacle is found in certain acts of Archibald after his father's death, these amounting, so it is said, to an election to take under the will. Upon this point Judge Thompson heard the evidence, and found as a result that:

> "The additional evidence does not support the same conclusion (of acceptance) as to Archibald A. Alexander, and no sufficient cause is shown for disturbing as to him the findings in the opinion filed August 16, 1915."

Digitized by Google

With this we agree. Archibald has always opposed his father's will. For years he contested it in the courts, he never willingly accepted its provisions or profited by it in any degree, and in our opinion none of the acts referred to is inconsistent with this attitude of antagonism, and none requires us to hold that he made his election in favor of the will. Of course, now that the Supreme Court of Pennsylvania has adjudged the will to be valid, he is confronted with a different situation; but we do not see how this affects the conclusion that the testator, being a trustee under obligation to account, could not by his own act, without his son's consent, take away the son's right to have that obligation fulfilled in some appropriate forum. No act of Archibald was proved that amounts to an election, and, as the other objections of the Trust Company have been sufficiently answered by the district court, we need not discuss the subject further.

On the Trust Company's appeal the decree is affirmed.

Appeal of Archibald Alexander.

[11] After the decree had been entered and the Trust Company had perfected its appeal by filing assignments of error and entering the bond for costs required by the District Court, Archibald notified the Trust Company that he would issue an execution, whereupon the company asked, and the District Court granted, an order staying the writ. From this order, which is a supplement to the decree, the present appeal is taken, and the argument is made that the stay was improperly granted because the appeal is not in form a supersedeas. The appellant's counsel contends that the well-settled practice in suits against an executor requires him to—

"plead either (1) that he never was such an executor, (2) that he has fully administered the estate, or (3) that he had only assets to a certain extent in his possession belonging to the decedent's estate. If he should fail to file any of said pleas, then, on a judgment or a decree against him, the law presumes he has a sufficiency of assets in his hands belonging to the testator with which to pay the judgment or decree against him."

Cases are cited in support of this contention, and in disputes where the limited jurisdiction of the federal courts is not an element the practice may be as argued. But in the present situation we do not think these cases are decisive. The testator's estate is still in process of settlement before the orphans' court of Philadelphia county, and we must take care to do nothing that may interfere with the distribution that belongs peculiarly to that tribunal. It may be true that the executor has abundant assets to pay the decree and all other claims that may be urged against the estate; but this we cannot certainly know, and, in order to avoid the possibility of mistake, we think we should confine the appellant, at least for the present, to the advantage he has gained by recovering the decree. He has now established his right to an account and has liquidated his claim. As it seems to us, the next step is to present the decree to the orphans' court, and if it shall there appear that the company has sufficient assets to pay the decree in full, and if the company should thereafter refuse to pay, we have no doubt the district court would permit the execution to issue. But until this shall be

Digitized by Google

done we think the order restraining execution should stand. See Yonley v. Lavender, 21 Wall. 276, 22 L. Ed. 536; Byers v. McAuley, 149 U. S. 608, 13 Sup. Ct. 906, 37 L. Ed. 867; Burd's Ex'r v. McGregor's Adm'r, 2 Grant, Cas. (Pa.) 365.

On the appeal of Archibald Alexander the decree is affirmed.

Appeal of Mary Alexander.

[12] Only a few words are needed in disposing of this appeal. In the fourth paragraph of his will the testator bequeathed the sum of $15,000 for the use of his daughter Mary, declaring that this was to be in full of her interest in her grandfather's estate. In August, 1896, this sum was set apart by the orphans' court, and she accepted and has ever since enjoyed the benefit of the income therefrom. And under the eighth paragraph of the will a much larger fund has also been set apart for her use, of which she has enjoyed, and is still enjoying, the income. At the time of her father's death she was mentally competent and of full age, and her interests have been cared for by distinguished counsel. Her contention now is that, although this bill was not filed until more than 20 years after her father's death, she continues to have the right to elect whether she will take the fund of $15,000 or will insist on her right to an account for her share in the Jones estate. The answer seems plain; with knowledge of the facts or with the means of knowledge, she distinctly made her election many years ago and accepted her father's will, and she must abide by the choice she then made.

On her appeal the decree is affirmed.

Appeal of John Alexander.

[13, 14] The appellant has not accepted his father's will, or received any benefit thereunder, but he concedes that his father paid him all that was due on the $10,000 mortgage, and confines his present claim to his share of the Underwood mortgage. Concerning this we need only say that we find no competent evidence in the record to answer the claim. We are not satisfied with the reasons given by the District Court for rejecting it. The testator could not be compelled to settle with his children in his lifetime, but, when he died without having settled voluntarily, prima facie they were all entitled to an account, and to be paid whatever should appear to be due. So far as Mary and Archibald are concerned, this presumption was strengthened by the testator's declarations (these being competent, because against his interest) that they had not been paid; but the fact that no such declaration was made with regard to John would not seriously affect the presumption that he also had not been paid. We find nothing in the record against his claim except the testator's declaration, made in the will of 1891 and repeated in the will of 1893, that "my devoted son John has years ago received from me his share of (the bequest from) his grandfather Jones's estate." Now, if this were competent evidence, we should accept it as decisive, at least in the absence of opposing evidence, but we feel bound to reject it under the well-known rule of evidence as an ex parte declaration in favor of the testator's interest,

Digitized by Google

and, there being nothing else to show that John has been paid his share of the Underwood mortgage, we must sustain the claim to an account therefor. Upon his appeal, therefore, the decree is reversed and the bill is reinstated, with directions to the District Court to take an account of his share in the $3,000 mortgage referred to.

We may add that we neither express nor intimate an opinion concerning the effect that a recovery by John and Archibald in this proceeding may have upon their claim (if any should hereafter be made) to share in a future distribution under their father's will.

On Petition of Lucien H. Alexander for Reargument.

Lucien H. Alexander, in pro. per.

PER CURIAM. [15] If we should apply the strict rules of legal procedure to this petition for a reargument, the decision would not be difficult. But the situation is peculiar; the petitioner would be affected by the decree appealed from, although he is not named therein, and, if he had asked to be heard when the appeals were originally argued in this court, we would undoubtedly have allowed him to take part. We assume that he had no actual notice (he had no record notice of the appeals), and therefore, in order to avoid a possible injustice and to afford him the opportunity to have a hearing, we have decided to grant his motion.

We direct that on or before February 5, 1918, he serve upon opposing counsel his printed brief, and such other printed matter as he may desire to present to this court; any reply thereto to be served on him on or before February 16, 1918; and the reargument to take place on February 21, 1918.

On Rehearing.

PER CURIAM. The rehearing granted in three of these appeals has now been had, and we have carefully considered again the arguments that were presented last November, as well as the arguments that have recently been presented for the first time; but we have not been brought to see that the opinion previously filed should be modified in any respect.

It is perhaps superfluous to say that much of the prolonged litigation that has vexed John Alexander's estate is directly due to his own well-meant and kindly, but nevertheless masterful, attitude toward his children's rights under their grandfather's will. But the statement is true, and, although it will probably have little, if any, effect, it may stand as one more contribution to the mass of testimony that favors established legal rules and methods rather than individual caprice and irregularity. And so, too, in reference to rules of evidence. Having learned what kind of a man the testator was, we do not find it easy to shut our minds to the declaration in his will that he had already settled fully with John; but, if the general rule is to prevail, this declaration is not competent, and there is then no evidence concerning a settlement, except John's own admission, and this only affects the $10,000 mortgage. We feel bound to stand by the rule, and to disregard our own belief concerning the value of the testator's statement.

No change will be made in the opinion filed November 24, 1917.

Digitized by Google

(249 Fed. 16)

PORTO RICO RY., LIGHT & POWER CO. v. UNITED STATES.

(Circuit Court of Appeals, First Circuit. March 26, 1917.)

No. 1292.

1. LANDLORD AND TENANT ⟹103(1)—CONDITIONS—BREACH OF.
The breach of a condition or covenant, with a right of re-entry, does not ipso facto work a forfeiture of the lease, but merely subjects the grantee or lessee to a liability to have a forfeiture declared at the lessor's option.

2. PUBLIC LANDS ⟹209—LEASE OF PORTO RICO LANDS—FORFEITURE—DECLARATION.
Though the United States, on cession of Porto Rico, acquired the reversion of lands held under a royal lease by Spain, and was authorized under Rev. St. and Codes Porto Rico, § 4578, to declare forfeiture of the lease, which made no provision for re-entry on account of the lessee's failure to pay rent, such forfeiture to be effective, must be declared by Congress by some legislative action.

3. STIPULATIONS ⟹14(1)—CONSTRUCTION.
Where a royal lease of Porto Rico lands, the reversion of which the United States acquired on cession by Spain, contemplated a reasonable increase in the rental, and the increase made by the United States was unreasonable, a stipulation that defendants refused to pay the rent demanded or recognize the right of the United States to demand such increase, should not be construed as a denial of the right to increase the rent and a refusal on the part of defendants to pay any increased rental whatsoever.

In Error to the District Court of the United States for the District of Porto Rico; Hamilton, Judge.

Ejectment by the United States against the Porto Rico Railway, Light & Power Company. There was a judgment for plaintiff, and defendant brings error. Reversed and remanded, with directions.

Carroll G. Walter, of New York City (J. Henri Brown, of San Juan, Porto Rico, and Edward J. Patterson, of New York City, on the brief), for plaintiff in error.

Thomas J. Boynton, U. S. Atty., and James A. Hatton, Asst. U. S. Atty., both of Boston, Mass. (George W. Anderson, U. S. Atty., of Boston, Mass., on the brief), for the United States.

Before DODGE, BINGHAM, and JOHNSON, Circuit Judges.

BINGHAM, Circuit Judge. This is an action of ejectment brought July 1, 1914, in the name of the United States, by the District Attorney for the District of Porto Rico, acting under the direction of the Solicitor of the Treasury, against the Porto Rico Railway, Light & Power Company, a Porto Rico corporation, to recover possession of a tract of land of 1248.24 square meters known as "La Carbonera," situated in the municipality of San Juan, Porto Rico, and leased by the Spanish government to Pablo Ubarri, pursuant to a royal order of January 21, 1881, who duly assigned and transferred his rights therein to the defendant.

Digitized by Google

A trial by jury having been waived, the case was heard before the District Judge, who made certain findings of fact and rulings of law, and entered a judgment in favor of the plaintiff. From this judgment the defendant sued out a writ of error, and in its assignment of errors complains, among other things, that the court erred in holding (1) that an action of ejectment could be maintained; (2) that the plaintiff was not estopped to increase the rental after the lapse of fifteen years from the happening of the contingency provided for in the lease on which an increase of rental might be had; (3) that it was the defendant's duty to determine the correct amount of the increased rent and tender the same under penalty of a forfeiture of the lease; (4) that the action could be maintained without a prior forfeiture of the grant or lease by legislative or judicial proceedings; (5) in the admission of certain testimony; and (6) in rendering judgment for the plaintiff upon the agreed facts and the facts found.

From the facts agreed and found, it appears that the United States is the owner in fee simple of the land in question, having acquired title by cession from Spain under the Treaty of Paris; that the military easements affecting the enjoyment and occupation of the land ceased in 1897; that the government officials of the United States in 1912 decided to increase the annual rental to $4,980, and, prior to June 30, 1912, duly notified the defendant that the rent would be increased to such sum from and after July 1, 1912; that the defendant refused to pay the rent as increased, or to recognize the right of the United States to demand such increase; that the yearly rental previously established by the Spanish government was 156.78 pesos, which sum Ubarri and the defendant paid yearly to the proper governmental authorities down to June 30, 1912, and thereafter annually tendered that sum.

[1, 2] In the view we take of the case, if it be assumed that ejectment is the proper remedy, that the plaintiff had the right to increase the rent, that the sum to which it was increased was reasonable, and that, under the civil law, a right to forfeit a lease for breach of a covenant to pay rent may exist, although no proviso or condition giving a right of re-entry is reserved in the lease or otherwise provided for, this suit cannot be maintained unless Congress, in whom alone the power resides, has exercised the right of election vested in the government to declare a forfeiture.

The lease did not contain a proviso permitting re-entry upon the failure of the lessee to pay the rent which it impliedly covenanted to pay (Beal v. Bass, 86 Me. 325, 29 Atl. 1088; Hodgkins v. Price, 137 Mass. 13, 17; People v. Gilbert, 64 Ill. App. 203; Spear v. Fuller, 8 N. H. 174, 28 Am. Dec. 391; 1 Washburn on Real Property, §§ 655, 656, 657; 24 Cyc. pp. 1348, 1349), or provide that payment of the rent should be a condition to the continuance of the lessee's rights under the lease, as required by the common law to entitle a lessor to enforce a forfeiture (Jackson v. Allen, 3 Cow. (N. Y.) 220, 227; Atlantic & Pacific Railroad v. Mingus, 165 U. S. 413, 428, 17 Sup. Ct. 348, 41 L. Ed. 770). But the Revised Statutes and Codes of Porto Rico provide:

Digitized by Google

"(4578) Sec. 1472. The lessor may judicially dispossess the lessee for any of the following causes: * * *

"2. Default in payment of the price agreed upon."

And, if this means that, under the civil law a breach of covenant to pay rent may be availed of to enforce a forfeiture without reserving a right of re-entry or making the payment of the rent a condition to the continuance of the lease, it would seem that the government, notwithstanding the absence of the foregoing provisions in the lease, might avail itself of a right to enforce a forfeiture provided it took the proper steps to do so.

The breach of a condition or of a covenant with a right of re-entry does not ipso facto work a forfeiture of a lease; it merely subjects the grantee or lessee to a liability to have a forfeiture declared. It is at the election of the lessor to say whether he will avail himself of the breach and declare a forfeiture or not, and, where the lessor is an individual, he is the party to make the election, and, where the lessor is the United States, it devolves upon Congress to exercise the power. In the latter case, the power to declare a forfeiture residing solely in Congress, its election so to do must be manifested in a legislative act. While there may be some doubt from the expressions used in the decided cases as to what action on the part of Congress may be sufficient to manifest an intention to declare a forfeiture, there can be no doubt that some legislative action is necessary for this purpose. United States v. De Repentigny, 5 Wall. 211, 268, 18 L. Ed. 627; Schulenberg v. Harriman, 21 Wall. 44, 63, 22 L. Ed. 551; St. Louis, Iron Mountain, etc., Ry. Co. v. McGee, 115 U. S. 469, 6 Sup. Ct. 123, 29 L. Ed. 446; New York Indians v. United States, 170 U. S. 1, 24, 18 Sup. Ct. 531, 42 L. Ed. 927; Spokane, etc., Ry. v. Washington & Great Northern Ry. Co., 219 U. S. 166, 173, 31 Sup. Ct. 182, 55 L. Ed. 159. See, also, United States v. Washington Improvement Co. (C. C.) 189 Fed. 674. In this case it does not appear that any legislative action looking to the declaration of a forfeiture has been taken by Congress, and, such being the situation, the present action cannot be maintained.

[3] It should perhaps also be stated that we are of the opinion that there is another insuperable objection to the maintenance of the action. The right reserved in the lease to increase the rent upon the cessation of the military easements contemplated a reasonable increase in the rental due to the increased value of the occupation and enjoyment of the land on the cessation of those easements. The District Court found that the reasonable value of the land after the removal of the military easements did not exceed $30 or $40 per square meter, and that a reasonable rental would be 5 per cent. of the valuation thus determined. The reasonable rental based on these figures for the 1,248.24 square meters of land here in controversy would be $2,496.48, or practically one half the rental demanded. The court below construed the stipulation of the parties in the case that the defendant "refused to pay said rent or to recognize the right of the United States to demand such increase," as a denial of the right of the government to increase the rent and a refusal on the part of the defendant to pay any increased

Digitized by Google

rental whatsoever, and that such being the case it was in default whether the increase was reasonable or otherwise. We, however, think that the stipulation does not warrant such a construction; that it means rather that the defendant did not question the right of the government to increase the rental, but that the amount to which it had increased it was unreasonable and in excess of its right; and, this being so, the refusal to pay the sum demanded would not put the defendant in default and entitle the plaintiff to assert a forfeiture.

The judgment of the District Court is reversed, and the case is remanded to that court for further proceedings not inconsistent with this opinion.

(249 Fed. 19)

PANAMA ELECTRIC RY. CO. v. MOYERS.

(Circuit Court of Appeals, Fifth Circuit. March 18, 1918.)

No. 3124.

1. VENUE ⟹8—TRANSITORY ACTIONS.
   An action for damages for injuries to an automobile from collision with an electric car is transitory, and, though it arose in Panama, the district court of the Canal Zone has jurisdiction, regardless of the citizenship of the parties, where service might be had on the defendant within the Zone.
2. STATUTES ⟹281—PLEADING—FOREIGN LAWS—WHAT LAW GOVERNS.
   The lex fori is decisive as to the necessity and manner of pleading foreign laws on which a transitory action is based.
3. EVIDENCE ⟹37—FOREIGN LAWS—PROOF.
   Foreign laws are facts, and must, like other facts, be proven.
4. EVIDENCE ⟹81—PRESUMPTIONS—FOREIGN LAWS.
   While a court of a common-law country may presume that the laws of a foreign country which are of common-law origin are the same as those of the forum, there is no such presumption with respect to the laws of a country having their origin in the civil, instead of the common, law.
5. EVIDENCE ⟹37—FAMILIARITY OF COURT WITH FOREIGN LAW.
   In action in the district court for the Canal Zone for damages from collision occurring in Panama, plaintiff's failure to introduce evidence of the law of Panama could not be excused because of familiarity of the trial judge with Panama law, for familiarity of the trial judge with the facts of the case being tried before him does not render unnecessary the introduction of evidence.
6. STATUTES ⟹290—EVIDENCE—ADMISSIBILITY.
   In such action, the exclusion of evidence as to the laws of Panama and facts which were pleaded by defendant as being a defense under those laws is improper.

In Error to the District Court of the Canal Zone; Wm. H. Jackson, Judge.

Action by H. G. Moyers against the Panama Electric Railway Company. There was a judgment for plaintiff, and defendant brings error. Reversed and remanded.

Theodore C. Hinckley and Stevens Ganson, both of Panama, Republic of Panama, for plaintiff in error.

Wm. C. MacIntyre and E. M. Robinson, both of Cristobal, Canal Zone, for defendant in error.

Before PARDEE, WALKER, and BATTS, Circuit Judges.

⟹For other cases see same topic & KEY-NUMBER in all Key-Numbered Digests & Indexes

Digitized by Google

BATTS, Circuit Judge. Plaintiff (H. G. Moyers, defendant in error) instituted suit against defendant (the Panama Electric Company, plaintiff in error) in the United States District Court of the Canal Zone, for damages in the amount of $1,500 for injuries to an automobile, occasioned by a collision in Panama with a car of defendant. It is alleged that plaintiff was a resident of the city of Panama, republic of Panama, and that the defendant company is a common carrier of passengers between Balboa, Canal Zone, and the city of Panama, and that it was doing business in the Canal Zone, and had property within the jurisdiction of the court. There is no allegation as to the citizenship of the plaintiff or defendant. The defendant entered a plea to the jurisdiction, alleging that the court had no jurisdiction over the defendant in personam, nor of the subject-matter of the action.

[1] There are many excellent reasons why the courts of the Canal Zone should not take jurisdiction of cases arising in Panama, especially where it is not shown that either party is a citizen of the United States. The courts of Panama are easily accessible, and, it must be assumed, better qualified to determine and apply the laws of that country than are the courts of the United States. While this is true, the authorities seem to establish that the courts of the Canal Zone are not without jurisdiction of cases of the kind here involved. The action is one known as transitory, and the rule appears to be that courts anywhere will entertain jurisdiction if service may be had upon the defendant. It is true that, in most of the cases in which such jurisdiction has been exercised, one or both of the parties have been citizens of the country in which the suit is brought; but the law as stated in the cases would not seem to regard the matter of citizenship as controlling. Dennick v. Railroad Co., 103 U. S. 11, 26 L. Ed. 439; Railroad Co. v. Crosby, 222 U. S. 473, 32 Sup. Ct. 132, 56 L. Ed. 274, 38 L. R. A. (N. S.) 40; Evey v. Mexican Central Ry. Co., 81 Fed. 294, 26 C. C. A. 407, 38 L. R. A. 387; Slater v. Mexican Nat. Ry. Co., 194 U. S. 120, 24 Sup. Ct. 581, 48 L. Ed. 900; s. c., 115 Fed. 593, 53 C. C. A. 239; Stewart v. B. & O. R. R. Co., 168 U. S. 448, 18 Sup. Ct. 105, 42 L. Ed. 537.

[2] The complaint of plaintiff does not set up the law of Panama applicable to the alleged facts, nor was any evidence introduced by him with reference to the law of that country. At the conclusion of the introduction of evidence by the plaintiff, the defendant made a motion to dismiss on the ground:

> That "the plaintiff had failed to prove a prima facie case; plaintiff had failed to establish by evidence the law of the republic of Panama, which was the lex loci delicti; that it was not proved that the evidence as introduced by the plaintiff under the laws entitled him to recover against the defendant."

In Liverpool Steam Co. v. Phœnix Ins. Co., 129 U. S. 445, 9 Sup. Ct. 469, 32 L. Ed. 788, it is held:

> "The rule that the courts of one country cannot take cognizance of the law of another without plea and proof has been constantly maintained, at law and in equity, in England and America."

Authorities are cited.

The rule as thus laid down is subject, in so far as pleading is concerned, to the general rules of pleading of the forum. When the lex

Digitized by Google

fori does not require other facts under like circumstances to be pleaded, the foreign law need not be pleaded as a fact.

[3, 4] As to proof of foreign laws, the general rule as stated is maintained. Like other facts, foreign laws must be proved. Certain presumptions, however, are sometimes indulged, and some limitations and modifications have been recognized. Where, for instance, the foreign country whose law is being applied is of common-law origin, the common-law country exercising jurisdiction may assume the foreign law to be the same as its own, in the absence of something indicating the contrary. Further limitations are suggested and the general law stated in Cuba R. R. Co. v. Crosby, 222 U. S. 477, 32 Sup. Ct. 132, 56 L. Ed. 274, 38 L. R. A. (N. S.) 40. In this case damages were sought for the loss of a hand through defect in machinery, the accident occurring in Cuba. No evidence was given as to the Cuban law, the trial judge holding that, if the law was different from the lex fori, it was for the defendant to allege and prove it. The Supreme Court says:

"It may be that, in dealing with rudimentary contracts or torts made or committed abroad, * * * courts would assume a liability to exist if nothing to the contrary appeared. * * * Such matters are likely to impose an obligation in all civilized countries. * * * With very rare exceptions, the liabilities of parties to each other are fixed by the law of the territorial jurisdiction within which the wrong is done and the parties are at the time of doing it. * * * The only justification for allowing a party to recover when the cause of action arose in another civilized jurisdiction is a well-founded belief that it was a cause of action in that place. The right to recover stands upon that as its necessary foundation. It is a part of the plaintiff's case, and if there is reason for doubt he must allege and prove it. * * * In the case at bar the court was dealing with the law of Cuba, a country inheriting the law of Spain and, we may presume, continuing it with such modifications as later years may have brought. There is no general presumption that the law is the same as the common law. We properly may say that we all know the fact to be otherwise. * * * Whatever presumption there is is purely one of fact, that may be corrected by proof. Therefore the presumption should be limited to cases in which it reasonably may be believed to express the fact."

The action in the instant case of the trial judge in his rulings with reference to the proof of the laws of Panama is defended upon the ground that the Canal Zone had been a part of the republic of Panama, and that—

"the laws of Panama, because they are the laws of that country, are the laws of the Canal Zone, and the courts of the Canal Zone have been construing those laws in the Canal Zone, and following the principles of Columbian and Panamanian jurisprudence since 1904."

It is true that the laws applicable to the territory now constituting the Canal Zone, and to the territory constituting the republic of Panama, were the same. It is not, however, true that the laws are now the same. Since 1904 changes have been made, both in the laws of Panama and the laws of the Canal Zone. If, as stated by counsel, courts of the Canal Zone have been construing the laws of Panama since 1904, it is to be assumed that they have construed them only when the laws have been properly before them as evidence.

[5] It is sought to excuse introduction of evidence of the law of Panama on the ground of familiarity of the trial judge with the juris-

Digitized by Google

prudence of that country. Familiarity of the trial judge with the facts of the case being tried before him does not render unnecessary the introduction of evidence. It is quite possible that the trial judge could have qualified as an expert in the laws of Panama; his testimony with reference thereto would, in that event, have been admissible, but he was not called upon to testify.

It appears from the answer of the defendant that part of the applicable law was contained in certain provisions of the Code of Panama and some articles of the Police Code of that country. Indeed, the trial judge stated in his charge that the plaintiff's cause of action was based upon a provision of the Panama Code which he cited. It is apparent from the statement of the trial judge, and the pleadings of the defendant and evidence offered by it, that the cause of action and the defense to it were to be governed by written provisions of the laws of Panama, and the construction given to these laws in that country.

[6] The defendant offered as a witness a practicing lawyer in the republic of Panama, who had for seven years been a justice of the Supreme Court of that republic. He was asked a question with reference to a decree, which apparently had the force of law, regulating the running of electric cars and vehicles crossing the tramway. The question was objected to, the ground of objection not being stated. The objection was sustained. The trial judge, in his charge to the jury, states that the plaintiff was not precluded from a recovery on account of the ordinance referred to, and says:

"And for this reason I prohibited Judge De la Guardia from giving his opinion as to whether or not that would preclude the plaintiff in a civil action in the republic of Panama from recovering, because that must depend upon the circumstances."

The question was doubtless objectionable in form. After this objection had been sustained, counsel for the defendant made the following tender:

"May it please the court: This is a case involving the construction and interpretation of the law of the republic of Panama. The proper construction of that law is a charge upon this court. This is a transitory action; lex loci delicti governs; the collision occurred in the republic of Panama; both parties, plaintiff and defendant, are residents of Panama and do business there; we now propose to show as a fact that by the law of Panama, and the construction of that law by the courts of last resort of that republic, one who violates the provisions of Executive Decree 163 of December, 1904, is precluded from recovery against a defendant in an action of this nature for damages. We now tender evidence to show that this plaintiff, under the law of Panama, and the construction of that law by the courts of Panama, under the facts as testified to in this case, would be precluded from recovery; and we further tender evidence of Judge Guardia to show that there is no right of action against a corporation for damages for negligence under the laws of Panama, and the construction thereof by the courts of Panama, when the employés who caused the damage were carefully instructed in their duties, and the corporation exercised due care and diligence in their employment."

The court refused to hear the evidence, stating:

"To permit the introduction of such evidence would be to delegate to this witness the right to pass upon the issues involved in this case. The plaintiff's objection is therefore sustained."

Digitized by Google

In addition to pleading the decree referred to, defendant set up as matters of defense:

"That the defendant, at all times, has exercised due care and diligence in the selection of its employés, and that all employés of said defendant company are competent and faithful servants of the defendant company, and that they had at all times used due care and diligence in the performance of the duties intrusted to them."

The tender of evidence by the defendant was responsive to its pleading, and it was entitled to at least some of the evidence tendered. Slater v. Mexican National Ry. Co., 194 U. S. 120, 24 Sup. Ct. 581, 48 L. Ed. 900.

The conclusion reached with reference to the rejection of this evidence renders it unnecessary to consider the other assignments of error. The judgment is reversed, and the cause remanded.

Reversed and remanded.

(249 Fed. 23)

SCATTERGOOD et al. v. AMERICAN PIPE & CONSTRUCTION CO.

Appeal of HITCHCOCK.

(Circuit Court of Appeals, Third Circuit. March 29, 1918. Rehearing Denied April 22, 1918.)

No. 2336.

1. COURTS ⟹276—UNITED STATES COURTS—DISTRICT FOR BRINGING SUIT—WAIVER OF OBJECTIONS BY APPEARANCE.

Where a petition for the appointment of a receiver of a foreign corporation was filed in the federal District Court for the state wherein it was doing its principal business, the corporation's voluntary appearance and filing of an answer cured any objections on the ground of want of jurisdiction of its person.

2. CORPORATIONS ⟹557(½)—RECEIVER—APPOINTMENT—DISMISSAL OF BILL.

A bill seeking the appointment of a corporate receiver should be dismissed by the court on its own motion, when it appears that the court is without jurisdiction, regardless of how knowledge of that fact may be acquired.

3. COURTS ⟹262(3)—UNITED STATES COURTS—RECEIVER—APPOINTMENT—JURISDICTION.

A New Jersey corporation, which controlled many subsidiary public service corporations, continuously carried on its principal business in Pennsylvania. Its most important subsidiaries were chartered by that state, and their plants located therein. The New Jersey company became embarrassed and on petition by stockholders a receiver was appointed by the district federal court for Pennsylvania, the appointment being consented to by a majority of the stockholders and creditors. Nearly all of the creditors were residents of Pennsylvania. *Held*, in view of the power exercised by the Pennsylvania state courts, the district court had jurisdiction to appoint a temporary receiver for the purpose of protecting the corporation, its subsidiaries and the public.

4. COURTS ⟹263—UNITED STATES COURTS—RECEIVER—ORDER OF APPOINTMENT—JURISDICTION.

Where the federal District Court had jurisdiction of the subject-matter, warranting the appointment of a receiver of an embarrassed corporation, it had authority to decide all questions arising therein and its rulings could be questioned only by those properly parties.

⟹For other cases see same topic & KEY-NUMBER in all Key-Numbered Digests & Indexes

Digitized by Google

5. CORPORATIONS ⟹556—RECEIVER—INTERVENTION—APPOINTMENT.

Where the court appointing a receiver of a financially embarrassed corporation had jurisdiction of the subject-matter and the corporation, a stockholder cannot, merely by virtue of his interest as such, intervene and attack the appointment.

Appeal from the District Court of the United States for the Eastern District of Pennsylvania; Oliver B. Dickinson, Judge.

Bill by Alfred G. Scattergood and others against the American Pipe & Construction Company, in which a receiver was appointed. Thereafter Charles A. Hitchcock filed a petition in intervention, which was denied, and he appeals. Affirmed.

Horace L. Cheyney and Runyon & Autenrieth, all of New York City, for appellant.

Francis B. Bracken and Walter George Smith, both of Philadelphia, Pa., for appellees.

Before BUFFINGTON, McPHERSON, and WOOLLEY, Circuit Judges.

McPHERSON, Circuit Judge. The following facts—we state them in outline merely—were before the District Judge in December, 1917, when he refused the intervener's petition to dismiss the bill, or to vacate the receiver's appointment:

In September, 1917, the American Pipe & Construction Company, a New Jersey corporation, with an issued capital of $5,000,000, controlled and managed 17 subsidiary companies, and was affiliated with 6 others, all of the 23 being public utility corporations, mainly for the purpose of supplying water to municipalities in several states. It owned all the stock of the subsidiaries, and a substantial amount in each of those affiliated, as well as about $4,000,000 of bonds issued by one or another of these two classes. The management of the subsidiaries had obliged it to assume liabilities, and to make advances, both in large sums. Part of the company's business is to do construction work by contract, and when the bill was filed several contracts were in hand unfinished. Its direct liabilities also were large, and defaults on these and on its contingent liabilities—such as guaranteed bonds—were sure to occur before long. Under conditions then existing in the money market, it could not borrow money or sell its own securities, but if the contracts could be finished considerable profit was likely, and this would help the company to meet its obligations and would benefit its security holders and other creditors. The bill set out these facts and averred that as all the allied companies were public utility corporations, they should be maintained as going concerns so that the public should not lose their services, and, moreover, that to allow creditors to resort to legal process would immediately break up the company's business and sacrifice its assets. Insolvency was not charged, but the plaintiffs, who were two of the stockholders, asked the court to interpose, so that creditors and stockholders might be saved from severe or total loss, and the public might be saved from the loss of service that the company through its subsidiaries was then

Digitized by Google

furnishing. The directors took action, and this resulted in a voluntary appearance, with an answer admitting the averments of the bill and praying for such a decree as might be just and equitable.

On September 22, 1917, the District Court appointed the company's president as temporary receiver, and a month later (with the approval of a considerable majority of the stockholders, and of a large number of creditors, nearly all the latter being residents of Pennsylvania) made the appointment permanent, authorizing the receiver to take possession of the company's property, to continue the business substantially as before, and to complete the existing contracts of construction with power to borrow money for this purpose. The decree enjoined the company and its officers from interfering with the receiver in carrying out its provisions. On October 31 Charles A. Hitchcock, the appellant, filed a petition averring that he was a stockholder, and had filed a bill in the United States court for the district of New Jersey, wherein he was asking for a receiver under the laws of that state on the ground of the company's insolvency; and he asserted further that as the company's charter was granted by New Jersey the District Court in Pennsylvania had no power to appoint a general receiver. He therefore sought to intervene as a defendant, in order to move for the vacation of the appointment and the dismissal of the bill. To this petition the plaintiffs and the company made answer, denying the court's lack of power to appoint, and averring facts to justify a suit in the Pennsylvania district, namely, the continuous maintenance in Philadelphia of the company's principal business, the chartering by Pennsylvania of its most important subsidiaries and the location of their plants in that state, the residence in Pennsylvania of nearly all the company's creditors, and the request or approval of a majority of its stockholders and creditors that the court below should make the order complained of. The District Court sustained the jurisdiction and refused Hitchcock's petition.

[1-3] That the court below had jurisdiction of the company's person is apparent; whatever objection on that ground may have existed was waived by the voluntary appearance and the answer. Central Trust Co. v. McGeorge, 151 U. S. 129, 14 Sup. Ct. 286, 38 L. Ed. 98. Indeed, the appellant concedes the correctness of this position, and bases his attack mainly on a denial of the court's power over the subject-matter of the bill, namely, the appointment of a receiver for a foreign corporation. We shall assume that the appellant has sufficient standing to urge this objection; and in any event, if in truth there is no jurisdiction of the subject-matter, either the District Court or this court would be bound to take note of that fact (however the knowledge might be acquired), and to dismiss the bill of its own motion. Upon this question we think the silence of the Supreme Court in Trust Co. v. McGeorge may fairly be allowed a good deal of weight. The facts there resemble closely the facts now before us. A New Jersey corporation was sued by a New York plaintiff in the United States court for the Western district of Virginia. The corporation carried on business in Virginia, owned property there, and was the main and substantial defendant, altho two other companies were involved in the litigation. It had voluntarily appeared and con-

Digitized by Google

sented to the appointment of a receiver, and the effect of the appearance and answer was the question decided; but the jurisdiction of the court over the subject-matter—the appointment of a receiver for a foreign corporation under the circumstances described—was so plainly presented on the surface of the cause that we can scarcely believe it could have been overlooked. Apparently, although the right of the lower court to appoint, where the corporation was properly before it and where the principal business and much of the property were also within the district, was not discussed by the Supreme Court, no one questioned the right either in the court below, or on the appeal. See, also, Lewis v. American Naval Stores Co. (C. C.) 119 Fed. 391.

But, without relying on the inference from these cases, let us consider the question on its merits. Under facts like the foregoing, does a District Court in Pennsylvania have power to appoint a receiver for a foreign corporation? In our opinion the answer should be yes; the reason being that the law of the state as interpreted by its highest tribunal has given that power to the local courts, and therefore according to the established rule a similar power may be exercised by the federal courts within the state. Clark v. Smith, 13 Pet. 195, 10 L. Ed. 123; and citations in 3 Rose's Notes (Rev. Ed.) 399. Among the Pennsylvania cases may be mentioned Bank v. Construction Co., 242 Pa. 269, 89 Atl. 76, where the state courts exercised jurisdiction over a New Jersey corporation "with a principal office in Philadelphia, engaged largely in building railroads and in public contracts," settled its affairs, and wound up its business; and Blum Bros. v. Girard Bank, 248 Pa. 148, 93 Atl. 940, Ann. Cas. 1916D, 609, where the common pleas court appointed receivers for a New Jersey corporation doing a mercantile business in Philadelphia, although the bill averred that the corporation was solvent, being in possession of assets far in excess of its liabilities, but was temporarily embarrassed by reason of a stringent money market and other circumstances. In the latter case the Supreme Court maintains the right to appoint receivers in the case of embarrassed corporations (making no distinction between domestic and foreign), and says:

"The right to appoint receivers has belonged to courts of chancery from a very early time (Power v. Grogan, 232 Pa. 387–394 [81 Atl. 416]). With us it has been uniformly exercised in cases of embarrassed corporations, and this course has had statutory authority, at least, since the Act of June 16, 1836, P. L. 789 (section 13, paragraph V), which confers on the courts of common pleas the supervision and control over corporations. * * * Many of our decisions recognize the right of a court of equity, in a proper case, to appoint receivers for a financially embarrassed trading corporation, and, if it proves insolvent, to distribute the assets for the benefit of creditors and to others ultimately entitled thereto."

[4, 5] We think these references are enough to show that a Pennsylvania court (and therefore a federal court sitting within the state) may entertain a bill to appoint receivers for a corporation financially embarrassed; and, if this be true, the District Court had jurisdiction of the subject-matter of the present bill as well as of the defendant's person. Having thus complete jurisdiction over the cause, it had authority to decide all questions arising therein, and its rulings can be questioned only by those properly parties to the dispute. Among

Digitized by Google

such parties we do not think the appellant is to be reckoned. The sole ground for his effort to interfere is that he is a stockholder; but, as the company has voluntarily submitted its person and the subject-matter of the suit to a tribunal having jurisdiction in both respects, we do not see by what right a single stockholder relying merely on that character can attack such valid and voluntary action, and can successfully undertake to conduct the proceeding as if he and not the company were the real defendant. For example, much of his argument objects to the bill as if it had been before the court on demurrer.

We do not think our conclusion is in real conflict with Maguire v. Mortgage Co., 203 Fed. 858, 122 C. C. A. 83, where the Court of Appeals for the Second Circuit recognizes that if state statutes "provide for the liquidation of the affairs of corporations through receivers * * * the courts within the appropriate jurisdictions may enforce them." But no such statute was there presented, and this we think sufficiently distinguishes the case now before us.

The order of the District Court is affirmed.

(249 Fed. 27)

CAMP BIRD, Limited, v. HOWBERT, Collector of Internal Revenue.

(Circuit Court of Appeals, Eighth Circuit. February 1, 1918.)

No. 4939.

1. INTERNAL REVENUE ⟹38—CORPORATION TAXES—ADDITIONAL ASSESSMENT—RECOVERY.

In view of the fact that it was enacted as part of the legislation imposing a general system of internal revenue to meet the financial burdens of the Civil War, Rev. St. § 3225 (Comp. St. 1916, § 5948), declaring that, when a second assessment is made, in case of any list, statement, or return which in the opinion of the collector was false or fraudulent, or contained any understatement or undervaluation, no taxes collected under such assessment shall be recovered, unless the list, statement, or return was not false or fraudulent, and did not contain any understatement or undervaluation, in its application to taxes collected under Corporation Tax Act Aug. 5, 1909, c. 6, 36 Stat. 112, does not authorize the recovery of sums paid on a second assessment, where the return was false, but not fraudulent.

2. INTERNAL REVENUE ⟹2—EXCISE TAXES—AUTHORITY OF CONGRESS—UNIFORM.

The only limitation on the power of Congress in the imposition of excise taxes, such as those imposed on corporations, is that they be uniform throughout the United States, and by that is meant a geographical uniformity.

3. INTERNAL REVENUE ⟹2—VALIDITY OF STATUTE—CONFISCATION.

Rev. St. § 3225 (Comp. St. 1916, § 5948), relating to internal revenue, and forbidding recovery of amounts paid on a second assessment, where the return was false or fraudulent, is not invalid in its applicability to the Corporation Tax Act, for it does not destroy uniformity of taxation, applying to all portions of the country alike.

4. INTERNAL REVENUE ⟹38—EXCISE TAXES—CORPORATION TAXES.

As the Corporation Tax Act imposes an excise tax, and declares that all laws relating to the collection, remission, and refund of internal revenue taxes so far as applicable shall apply, Rev. St. § 3225 (Comp.

⟹For other cases see same topic & KEY-NUMBER in all Key-Numbered Digests & Indexes

Digitized by Google

St. 1916, § 5948), which is part of the law relating to the refund of internal revenue taxes, and forbids the return of taxes collected on a second assessment, where the return was false or fraudulent, applies.

5. INTERNAL REVENUE ⟹4—AMENDMENT—RETROACTIVE EFFECT.

The amendment to Rev. St. § 3225 (Comp. St. 1916, § 5948), declaring that the section shall apply to statements or returns made in good faith regarding the annual depreciation of oil and gas wells and mines, is not retroactive, and does not authorize recovery of corporation taxes previously collected from a mining company on a second assessment, where the first return was false.

In Error to the District Court of the United States for the District of Colorado; Jacob Trieber, Judge.

Action by the Camp Bird, Limited, a corporation, against Frank W. Howbert, as Collector of Internal Revenue. There was a judgment for defendant, and plaintiff brings error. Affirmed.

George L. Nye, of Denver, Colo., and William Story, Jr., of Ouray, Colo. (W. V. Hodges, of Denver, Colo., on the brief), for plaintiff in error.

John A. Gordon, Asst. U. S. Atty., of Denver, Colo. (Harry B. Tedrow, U. S. Atty., of Denver, Colo., on the brief), for defendant in error.

Before CARLAND, Circuit Judge, and AMIDON and MUNGER, District Judges.

MUNGER, District Judge. This action was brought by plaintiff in error, hereafter called plaintiff, against defendant in error, as collector of internal revenue of the United States for the district of Colorado, hereafter called defendant. The object of the action was to recover sums of money that plaintiff had paid to defendant as an internal revenue tax. A jury was waived, and the trial court entered judgment upon special findings of facts, dismissing plaintiff's action.

Briefly stated, the court found that the plaintiff was the owner of valuable and productive mining property in Colorado, after the year 1902, and that it made a return for each of the years 1909, 1910, and 1911 to the collector of internal revenue, purporting to set forth its income for each of those years, under the provisions of the act of Congress approved August 5, 1909 (36 Stat. 112, c. 6), relating to an excise tax on corporations. In these returns the plaintiff stated the items of charge and credit and the net annual income which it considered subject to the tax. The Commissioner of Internal Revenue found that deductions claimed in each of these returns had been overstated, and that the amount subject to the tax had been understated, and made additional assessments against the plaintiff and notified it of his action. The plaintiff, under protest, paid the additional taxes levied. An application to the Commissioner of Internal Revenue for an abatement of the additional tax was denied by the Commissioner, and this action was then begun. While the court found that the plaintiff had understated its net income upon which it was required to pay the excise tax, it was further found that the understatement was not made

Digitized by Google

fraudulently, knowingly, willfully, nor for the purpose of defrauding the United States, but was made in good faith and with the belief that the figures presented stated the facts. The only question in the case is whether the judgment is supported by these findings.

[1] Section 3225 of the Revised Statutes (Comp. St. 1916, § 5948), as it existed at the time these taxes were levied and collected, was as follows:

"When a second assessment is made in case of any list, statement, or return, which in the opinion of the collector or deputy collector was false or fraudulent, or contained any understatement or undervaluation, no taxes collected under such assessment shall be recovered by any suit, unless it is proved that the said list, statement, or return was not false nor fraudulent, and did not contain any understatement or undervaluation."

It is contended that this section was meant to be applied only to those who intentionally made false statements or undervaluations, because when this act was passed an accurate statement of the facts required in returns by taxpayers could be made, whereas returns under the corporation tax law necessarily must be estimates.

By the acts of Congress approved June 30, 1864 (13 Stat. 223, c. 173), as amended and supplemented by the acts of Congress of March 3, 1865 (13 Stat. 469, c. 78), of July 13, 1866 (14 Stat. 98, c 184), and March 2, 1867 (14 Stat. 471, c. 169), a general system of internal revenue was provided to meet the financial burdens imposed by the Civil War. Taxes were imposed generally upon property, occupations, industries, and incomes. Many classes of persons subject to taxation were required to make sworn lists or returns of property subject to the tax. The values of property were to be reported and amounts of net income, and the accurate statement of many of the items required were quite as difficult as the ascertainment of the required items under the present corporation tax. Section 14 gave the assessor power to summon a declarant and to examine him and his books, if in his opinion the return was either false or fraudulent, or contained any understatement or undervaluation. If the return was false or fraudulent, the assessor was required to increase the tax by 100 per cent. An unexcused neglect or refusal to make or to verify a list was penalized by the addition of 50 per cent. to the tax. By section 20 the assessor was empowered to fix the amount of additional tax to be paid, when there had been an omission, understatement, undervaluation, or false or fraudulent statement. Section 44 authorized the Commissioner of Internal Revenue to refund excessive taxes collected, and to repay to collectors amounts recovered in court against them for taxes collected by them, but provided that no taxes should be recovered, refunded, or paid back, where a second assessment had been made because the first list had been, in the opinion of the assessor, either false, fraudulent, or contained any understatement or undervaluation, unless it was proved that the return was not false or fraudulent, or did not contain any understatement or undervaluation.

The substance of these enactments has continued in force ever since. See Rev. St. §§ 3173, 3176, 3182, 3220, 3225; U. S. Comp. Stats. Ann. §§ 5896, 5899, 5904, 5944, 5948. They evince a discriminating use of

Digitized by Google

terms as between false and fraudulent returns and those that contain only an understatement or valuation, and provide remedies and penalties apportioned to the several delinquencies. The mere undervaluation or understatement in a return is made a basis for summoning the delinquent to appear and be examined, and a basis also for imposing an additional assessment, and prevents the Commissioner of Internal Revenue from making a refund or remission of taxes. The further provision found in section 3225 of the Revised Statutes, denying recovery by suit of any tax imposed under a second assessment, because in the opinion of the collector or his deputy the former return was false or fraudulent, or contained an understatement or undervaluation, unless it is proved that the prior list was not false nor fraudulent, nor contained any understatement or undervaluation is in harmony with these provisions, and manifests the intention of Congress that no recovery may be had although the undervaluation or understatement was made unintentionally. See Bergdoll v. Pollock, 95 U. S. 337, 24 L. Ed. 512.

[2, 3] The proposition is advanced that this construction of section 3225 renders it violative of the Constitution, as it would result in the confiscation of plaintiff's property. It is well settled that this corporation tax act imposed an excise tax, and the only limitation on the power of Congress in the imposition of excise taxes is that they shall be uniform throughout the United States. United States v. Singer, 15 Wall. 111, 121, 21 L. Ed. 49; Pacific Insurance Co. v. Soule, 7 Wall. 433, 446, 19 L. Ed. 95. By this a geographical uniformity is meant. Flint v. Stone Tracy Co., 220 U. S. 107, 31 Sup. Ct. 342, 55 L. Ed. 389, Ann. Cas. 1912B, 1312. The provisions laying an additional tax proportionate to the property omitted from the list, on all who make any understatement or undervaluation, operates uniformly on all of that class of persons wherever found, and hence was within the power of Congress. The refusal of a right of action to recover such taxes, unless proof is made that there was no understatement or undervaluation, is likewise within the scope of the legislative power.

[4] It is claimed that section 3225, Rev. St., does not apply to the suit for the recovery of taxes collected under the corporation tax of 1909. This section applies to internal revenue taxes generally and the corporation tax is one embraced in that class. In addition the corporation tax law contained a clause as follows (page 951, Supp. to U. S. Comp. Stats. 1911):

> "All laws relating to the collection, remission, and refund of internal revenue taxes, so far as applicable to and not inconsistent with the provisions of this section, are hereby extended and made applicable to the tax imposed by this section."

We think that section 3225, Rev. Stats., is a part of the laws relating to the refund of internal revenue taxes, as section 3220, Rev. St., provides that the Commissioner of Internal Revenue is authorized to refund to the collector any amount that may be recovered against him in any court for any internal taxes collected by him.

[5] Plaintiff also contends that the judgment is erroneous because, after final judgment was entered in this case, Congress enacted an

Digitized by Google

amendment to section 3225, Rev. St., which reads (page 6984, 6 U. S. Comp. Stats. Ann.):

"* * * But this section shall not apply to statements or returns made or to be made in good faith under the laws of the United States regarding annual depreciation of oil or gas wells and mines."

This statute does not purport to be retroactive in its operation, and hence cannot affect the judgment in this case. This disposes of all questions that require consideration.

The judgment will be affirmed.

(249 Fed. 31)

CROCKER v. INGERSOLL ENGINEERING & CONSTRUCTING CO.

(Circuit Court of Appeals, Sixth Circuit. February 11, 1918.)

No. 3062.

1. DEEDS ⟹173—RESTRICTIONS—ENFORCEMENT.

Where a grantor subdivided his lands and disposed of them to numerous grantees, and the several deeds all contained a restrictive covenant in the nature of a condition subsequent, allowing the grantor to reenter in event of breach, the restriction must be deemed for the benefit of the several grantees, and can be enforced by them, though the grantor had lost his right of re-entry.

2. INJUNCTION ⟹62(1)—RESTRICTIVE COVENANTS.

Injunction is an appropriate remedy to enforce a restrictive covenant imposed on lands by the common grantor for the benefit of his several grantees.

3. DEEDS ⟹176—RESTRICTIONS—ENFORCEMENT.

The running of limitations against the right of a grantor to enforce a restrictive covenant in the nature of a condition subsequent does not show that the grantee had freed his property from the incumbrance of the restriction, where it was enforceable by other grantees of the same grantor, whose number exceeded 100, for limitations available against the grantor might well not be available against all the grantees or their successors.

4. VENDOR AND PURCHASER ⟹138—TITLE—KNOWLEDGE BY PURCHASER.

Though the purchaser relied on its own title examination when it contracted, and there was no fraud or misleading by the vendor, yet an action for damages on account of the vendor's inability to convey title as agreed cannot be defeated, unless the purchaser knew of the particular defect when it contracted.

5. VENDOR AND PURCHASER ⟹351(10)—DAMAGES—INTEREST AND RENTAL.

Where a vendor's title proved defective, the purchaser, who had been admitted into possession, should not be allowed to recover interest on purchase-money payments, without being charged with the rental value of the premises while it had possession.

6. APPEAL AND ERROR ⟹269, 719(9)—REVIEW—ASSIGNMENT OF ERROR.

Where, in an action by a purchaser for damages on account of the vendor's inability to convey title as agreed, there was an error in favor of the purchaser in the assessment of damage, such error, not having been assigned, will not be considered, under rule 11 (198 Fed. xxii, 115 C. C. A. xxii); it appearing that it was more than counterbalanced by reason of the vendor's forfeiture of improvements placed on the premises by the purchaser.

⟹For other cases see same topic & KEY-NUMBER in all Key-Numbered Digests & Indexes

Digitized by Google

7. ACTION ⟹53(2)—SPLITTING CAUSE OF ACTION.
Where a purchaser, after being admitted into possession, defaulted, and the vendor forfeited the contract, such purchaser, having recovered damages on account of the vendor's inability to convey the title as agreed, cannot thereafter recover on account of improvements which it placed on the premises, for a cause of action cannot be split.

8. EQUITY ⟹65(2)—EQUITABLE RELIEF—RIGHT TO.
Where a purchaser of land, having been admitted into possession, defaulted in payment and allowed the vendor to forfeit the contract, without informing him as to the trouble with the title, such purchaser is not entitled to equitable aid on account of improvements placed on the premises, which by reason of the forfeiture became the property of the vendor.

In Error to the District Court of the United States for the Eastern District of Michigan; Arthur J. Tuttle, Judge.

Action by the Ingersoll Engineering & Constructing Company against Martin Crocker. There was a judgment for plaintiff, and defendant brings error. Affirmed.

Martin Crocker, of Mt. Clemens, Mich. (F. D. Eaman, of Detroit, Mich., of counsel), for plaintiff in error.

Gifford K. Wright, of Pittsburgh, Pa., and Fritz L. Radford, of Detroit, Mich. (McKee, Mitchell & Alter, of Pittsburgh, Pa., of counsel), for defendant in error.

Before KNAPPEN, MACK, and DENISON, Circuit Judges.

PER CURIAM. A general statement of the facts here involved will be found in our opinion in Ingersoll Co. v. Crocker, 228 Fed. 844, 143 C. C. A. 242, and need not be here repeated. After that opinion was filed, the suit at law therein referred to proceeded to trial in the court below, resulting in a judgment which awarded to the Ingersoll Company the purchase money it had paid Crocker, and interest, and from that judgment the present writ of error is prosecuted.

[1, 2] 1. A re-examination of the chief and underlying meritorious question has not convinced us that it was mistakenly decided upon the former hearing. It is true that the restrictive provision was not, in form, a covenant, but was distinctly a condition subsequent; and it may well be that the right to forfeiture or re-entry for breach of that condition has been lost by the grantor and his heirs. However, this deed cannot be considered by itself; there were about 120 of them, made at about the same time, in identical form and covering practically all the property in the vicinity; and we have no doubt that they constituted, in substance and effect, and at least in equity, an agreement between the grantor and each grantee, and for the benefit of all other similar grantees, that the restrictions should be maintained in that vicinity; nor that this parcel, and each of the others, was burdened with what was, in effect, a negative easement for the benefit of adjacent parcels; nor that, at the least, the owners of other parcels out of the same tract might have injunctive relief against a breach of the restriction; nor that this was a burden which, while it existed, made the title unmarketable. Lowrie, J., in Clark v. Martin, 49 Pa.

Digitized by Google

289, 297; Bigelow, J., in Whitney v. Union Co., 11 Gray (Mass.) 359, 363, 71 Am. Dec. 715; Cooley, J., in Watrous v. Allen, 57 Mich. 362, 367, 24 N. W. 104, 58 Am. Rep. 363.

2. Upon the former hearing, it was not apparent to us how it could be sufficiently shown by way of defense to the suit at law that there had been such an adverse user as to destroy the effect of the condition, in view of the fact that the grantees, or their heirs and assigns, of all the other parcels beneficially affected were not parties to that suit; but there are cases where title by adverse possession may be so clearly established, even in a suit to which possible claimants are not parties, that the marketability of the title is thereby established (Barnard v. Brown, 112 Mich. 452, 70 N. W. 1038, 67 Am. St. Rep. 432; Pratt v. Eby, 67 Pa. 396); and we therefore left this question for trial in the suit at law, to be dealt with as the proofs there might justify.

[3] 3. The use of this parcel for a considerable number of years for a planing mill was clearly proved; but even if we assume that this use was, as matter of law, a breach of the condition, and that the proofs in this case show that it continued for 15 years, that would not have justified a verdict for Crocker. There were more than 100 parties who were entitled to dispute these claims of fact, and disprove them if possible, and there is a high probability, if not certainty, that among so many parties there will be some against whom the statute of limitations or the equivalent rules of laches or abandonment could not be running because such parties were not sui juris or not within the country. It must be evident that there is not a mere possibility, but a real and substantial probability, that the validity of the title depends upon the verdict of a future jury upon a disputed question of fact. Simis v. McElroy, 160 N. Y. 156, 163, 54 N. E 674, 73 Am. St. Rep. 673; Carolan v. Yoran, 104 App. Div. 488, 93 N. Y. Supp. 935, 937; cases cited in 32 Cyc. 1462.

4. There was only one way to clear the title—by bill in equity against all parties in interest. Alpha Co. v. Shirk (C. C. A. 7) 227 Fed. 966, 972, 142 C. C. A. 424. If Crocker had promptly moved for this remedy as soon as he knew the situation, possibly a way might have been found to hold matters in statu quo until he could get that relief; but several years have elapsed, and it is now too late to consider any such course.

[4] 5. The facts, clearly proved, that there was no fraud or misleading by Crocker, and that the vendee relied on its own title examination when it made the contract, cannot avail to defeat the action. This is not a suit for rescission, it is for the damages flowing from Crocker's inability to convey the title he promised. Only if the vendee knew of this very defect when it made the contract could we justify the conclusion of waiver.

[5-8] 6. It is claimed that the Ingersoll Company recovered interest upon its purchase-money payments and was not charged with the rental value of the premises while it had possession. This would seem to be error. Warvelle on Vendors (2d Ed.) p. 229. However, if the point was fairly brought to the attention of the trial court, which we doubt, it was not properly saved by exception and assignment

Digitized by Google

of error; and we are not inclined to notice it under rule 11 (198 Fed. xxii, 115 C. C. A. xxii) because any prejudice therefrom is at least counterbalanced by the situation which has resulted regarding the improvements which were placed upon the land by the Ingersoll Company and which, by the forfeiture of the title, have become Crocker's property. The Ingersoll Company can have no remaining right to recover therefor, either at law or in equity, because their value was a part of its damages which it had the right to recover, if anywhere, in this action, and a cause of action cannot be split by pleading only a part of it, whether the imperfect pleading be purposeful or inadvertent; and, more specifically, the Ingersoll Company cannot recover therefor in the equity suit, both because that is limited by the effect of our previous mandate and because the conduct of the Ingersoll Company, in leading Crocker to forfeit the contract without letting him know what the trouble with the title was, forbids a court of equity to give it any help.

7. The other assignments do not present any matters sufficiently controlling to justify discussion.

The judgment is affirmed.

(249 Fed. 34)

HENDRIKSON et al. v. UNITED STATES.

(Circuit Court of Appeals, Fourth Circuit. January 3, 1918.)

No. 1546.

CRIMINAL LAW ⟹631(4)—TRIAL—SERVICE OF LIST OF JURORS—RULES OF COURT.

It is within the powers of a District Court to make and enforce a rule prohibiting the disclosure of names of jurymen drawn for a term to any party prior to two days before the beginning of the term, and such rule may be enforced in criminal cases, where the offense is less than capital.

In Error to the District Court of the United States for the Eastern District of South Carolina, at Charleston; Henry A. Middleton Smith, Judge.

Criminal prosecution by the United States against F. L. Hendrikson and C. H. Hendrikson. Judgment of conviction, and defendants bring error. Affirmed.

W. Turner Logan, of Charleston, S. C., for plaintiffs in error.

J. Waties Waring, Asst. U. S. Atty., of Charleston, S. C. (Francis H. Weston, U. S. Atty., of Charleston, S. C., on the brief), for the United States.

Before KNAPP and WOODS, Circuit Judges, and CONNOR, District Judge.

KNAPP, Circuit Judge. Plaintiffs in error, hereinafter called defendants, were convicted in the District Court for the Eastern District of South Carolina of stealing a quantity of zinc blocks, copper wire, and other articles, the property of the United States. The first

---

⟹For other cases see same topic & KEY-NUMBER in all Key-Numbered Digests & Indexes

Digitized by Google

and principal question raised by the assignments of error is this: Some five days before the opening of the term at which defendants were to be tried, their counsel applied to the clerk for a list of the jurors who had been drawn and summoned. This request was refused by the clerk in obedience to a rule of the District Court which forbids disclosure of the names of jurymen "to any party whomsoever (save to the marshal of the court to be summoned) prior to two entire days before the first day on which any term or postponed term is to be holden whereat such jurors should serve." When the case was called for trial, counsel moved for a continuance, because the jury list had been refused, and the motion was denied.

We put aside as unimportant in this case the government's contention that the denial of a continuance was discretionary, and therefore not subject to review, and that defendants are not shown to have been prejudiced in any way by failure to get the jury list when requested. It is enough to say that the motion was not addressed primarily to the discretion of the court, but involved rather the assertion that defendants had been denied a right to which they were entitled, and the opinion of the learned District Judge shows that it was so regarded and decided. Moreover, if defendants had the right to be furnished with the list of jurors at the time application was made therefor, the presumption would be indulged that they were prejudiced by its refusal.

The controlling question, as we conceive, is the question of the power of the court to make and enforce the rule. Does it take away or abridge any substantial right, constitutional or otherwise, secured to defendants and those in like situation? There is no federal statute of direct application. Section 1033 of the Revised Statutes (Comp. St. 1916, § 1699) provides in substance that a copy of the indictment and a list of the jury shall be furnished, at least three entire days before his trial, to a person indicted for treason, and at least two entire days before his trial to a person indicted for any other capital offense. As this is the only provision on the subject, it would seem to follow, on the principle that inclusion of one is exclusion of another, that if the indictment be for a crime of lesser degree the jury list cannot be required and need not be furnished in advance of the trial. In United States v. Van Duzee, 140 U. S. 169, page 173, 11 Sup. Ct. 758, page 760 [35 L. Ed. 399], this was apparently assumed to be the settled rule of law, as it is incidentally remarked in the opinion:

"Nor is he entitled to a list of witnesses and jurors."

In the Shelp Case, 81 Fed. 694, 697, 26 C. C. A. 570, 573, it is said:

"If the indictment is not for a capital offense, the defendant is not entitled, as a matter of right, to a list of witnesses or jurors."

The general doctrine is stated in Pointer v. United States, 151 U. S. 396, 407, 14 Sup. Ct. 410, 414 (38 L. Ed. 208), as follows:

"In respect to the qualifications and exemptions of jurors to serve in the courts of the United States, the state laws are controlling. But Congress has not made the laws and usages relating to the designation and impaneling of jurors in the respective state courts applicable to the courts of the United States, except as the latter shall by general standing rule or by special order in a particular case adopt the state practice in that regard.

Digitized by Google

*** * * In the absence of such a rule or order, * * * the mode of designating and impaneling jurors for the trial of cases in the courts of the United States is within the control of those courts, subject only to the restrictions Congress has prescribed, and also to such limitations as are recognized by the settled principles of criminal law to be essential in securing impartial juries for the trial of offenses."**

This declaration covers the instant case and leaves practically nothing to be said. The necessary implication is that the rule under review was within the power of the District Court and that, so far from taking away any right possessed by defendants, it served rather to grant a privilege which otherwise they could not assert. It is needful only to add that nothing appears in the record before us to suggest that this power has been unwisely or improperly exercised.

The remaining assignments of error are based upon certain instructions to the jury, including those that were refused in the form requested by defendants. We have carefully examined these contentions without finding any of them of sufficient merit to require extended discussion. Complaint is made that defendants were prejudiced by the statement that "the charge in this case against them is intensified by the fact that both are employés of the government," with some amplifying comment. But the fact had repeatedly appeared in testimony and was wholly undisputed. It was alluded to by the trial judge as an aggravating circumstance, if defendants were guilty; but he took care to explain that it did not enter into the consideration of whether or not they were guilty, and made this plain by saying:

"They are to be judged by the same rules of testimony which would apply to any one; that is to say, that the testimony sufficient to establish their guilt must be as strong as in analogous cases would be the case for the charge against another."

In short, we are not persuaded that the instruction here referred to was misleading or otherwise harmful.

The explanation of what was meant by "reasonable doubt" is alleged to involve an erroneous statement of the law; but the argument is quite unconvincing. Indeed, the definition of this term by the learned district judge is practically identical with the definition approved by the Supreme Court in Hopt v. Utah, 120 U. S. 430, 7 Sup. Ct. 614, 30 L. Ed. 708, in which the subject of reasonable doubt is discussed at some length.

Of the remaining instructions to which exception was taken we deem it sufficient to say that they were warranted by the facts developed at the trial or were proper illustrations of the applicable principles of law. We are satisfied that defendants have had a fair and impartial trial, and the judgment of conviction should be affirmed

Digitized by Google

(249 Fed. 37)

BANK OF COMMERCE v. BROWN.

(Circuit Court of Appeals, Fourth Circuit. January 3, 1918.)

No. 1562.

1. BANKRUPTCY ⟹303(3)—VOIDABLE PREFERENCE—EVIDENCE.
Evidence considered, and *held* insufficient to support a finding that a bank, at the time it discounted the note of a bankrupt secured by collateral, from the proceeds of which note the bankrupt paid a prior unsecured note for a smaller amount, receiving the remainder in cash, had reasonable cause to believe that the bankrupt was insolvent, so as to render the transaction voidable as a preference.

2. BANKRUPTCY ⟹166(4)—VOIDABLE PREFERENCE—REASONABLE CAUSE TO BELIEVE DEBTOR INSOLVENT.
The burden is upon a trustee to prove that a creditor had reasonable cause to believe, at the time of taking security from the bankrupt, that he was insolvent, and that the security would effect a preference; and it is not sufficient, under Bankruptcy Act July 1, 1898, c. 541, § 60, cls. "b," "c," 30 Stat. 562 (Comp. St. 1916, § 9644), that the creditor may have had a suspicion as to the debtor's solvency, but he must have had knowledge of facts calculated to produce a belief of his insolvency in the mind of an ordinarily intelligent man.

Appeal from the District Court of the United States for the Western District of South Carolina, at Greenville, in Bankruptcy; Joseph T. Johnson, Judge.

In the matter of A. J. Dillard, bankrupt. From an order sustaining the objection of J. Hertz Brown, trustee, to the claim of the Bank of Commerce to certain security, the latter appeals. Reversed.

John Gary Evans, of Spartanburg, S. C. (I. A. Phifer, of Spartanburg, S. C., on the brief), for appellant.

J. C. Otts, of Spartanburg, S. C., for appellee.

Before KNAPP and WOODS, Circuit Judges, and CONNOR, District Judge.

KNAPP, Circuit Judge. [1] The controlling question in this case lies within narrow limits. On December 2, 1915, the Bank of Commerce, appellant herein, held notes to the amount of about $1,500, signed or indorsed by A. J. Dillard, who was adjudicated bankrupt within four months thereafter. On the date named, the bank discounted Dillard's note for $2,500, placing to his credit the proceeds, less what was due on the old notes, which were surrendered. To secure the payment of this note, Dillard gave the bank a note of the same amount, made by his son, S. B. Dillard, and one Bomar, which note was secured by mortgage on certain real estate and is the note in controversy. The trustee in bankruptcy having disputed the bank's claim to this security, on the ground that it was a voidable preference, the issue was tried in the court below, and a decree entered to the effect that the bank could hold the collateral as security for the additional money loaned when the $2,500 note was discounted, but not for the pre-existing debt, and that the balance of the collateral, after payment

⟹For other cases see same topic & KEY-NUMBER in all Key-Numbered Digests & Indexes

Digitized by Google

of the amount advanced when it was pledged, must be turned over to the trustee. The bank appeals.

The sole basis of this decision, as the decree discloses, was the testimony of a Mr. Cantrell, who was a member of the loan committee of the bank at the time of the transaction. His entire statement, so far as material, appears in the record as follows:

"Q. Your idea in making this additional loan was to secure what he already owed you? A. That note was due, and he said it didn't suit him to take it up, and he gave us a $2,500 note he held against Mr. Bomar, and took up the $1,500 note, and I think we gave him $1,000 in money. Q. You considered the note perfectly good? A. Sure did. Q. How did you consider the notes you already had? A. Well, we didn't see any chance of collecting them. Q. You took this additional note for what you thought you were in danger of losing? A. That's my idea. Q. From what you have heard, you thought you were in pretty grave danger of losing? A. Well, we were uneasy."

It will be observed that no fact or circumstance is mentioned by Cantrell, and no reason given by him for any opinion or belief he may have had respecting the financial condition of Dillard; nor was this belief or opinion, if his state of mind may be so described, communicated to any officer or director of the bank. In point of fact, there was no meeting of the loan committee to pass upon the discount of Dillard's note; but each member was separately consulted and gave his assent. Moreover, the president of the bank, its cashier, and another member of the loan committee, all testified in substance that they had no reason to suppose that Dillard was insolvent; and the learned District Judge says he was satisfied that their testimony was true. There was also testimony to the same effect by the president of another bank.

[2] Even if it be assumed, as stated in the decree, that "Cantrell's knowledge and purpose is the knowledge and purpose of the bank," and giving due weight to his testimony as above quoted, we think it quite insufficient to sustain the conclusion that the bank had reasonable cause to believe that Dillard was insolvent and that the taking of the security in question would give it a preference over other creditors. And so the courts have held in analogous cases. In Grant v. National Bank, 97 U. S. 80, 24 L. Ed. 971, where, as seems to us, the proof respecting "reasonable cause to believe" was decidedly less favorable to the security holder than in the case at bar, the Supreme Court, reversing the court below, said:

"It is not enough that a creditor has some cause to suspect the insolvency of his debtor; but he must have such a knowledge of facts as to induce a reasonable belief of his debtor's insolvency, in order to invalidate a security taken for his debt. * * * A man may have many grounds of suspicion that his debtor is in failing circumstances, and yet have no cause for a well-grounded belief of the fact. He may be unwilling to trust him further; he may feel anxious about his claim, and have a strong desire to secure it; and yet such a belief as the act requires may be wanting. Obtaining additional security, or receiving payment of a debt, under such circumstances, is not prohibited by law. * * * Hence the act, very wisely, as we think, instead of making a payment or a security void for a mere suspicion of the debtor's insolvency, requires, for that purpose, that his creditor should have some reasonable cause to believe him insolvent. He must have a knowledge of some fact or facts calculated to produce such a belief in the mind of an ordinarily intelligent man."

Digitized by Google

It turned out that Dillard was in fact badly insolvent, and he may have been aware when the transaction took place that his financial condition was hopeless; but the right of the bank to retain the security it got is to be tested, not by the knowledge or intent of Dillard, but by the belief then held by the bank's officers as to his ability to meet his obligations. The burden is upon the trustee to prove that the creditor had reasonable cause to believe at the time of taking the security that the debtor was insolvent and that the transfer would effect a preference. Barbour v. Priest, 103 U. S. 293, 296, 26 L. Ed. 478; Stucky v. Savings Bank, 108 U. S. 74, 2 Sup. Ct. 219, 27 L. Ed. 640. See, also, the later cases of In re Eggert, 102 Fed. 735, 43 C. C. A. 1, and Sharpe v. Allenler, 170 Fed. 589, 96 C. C. A. 104, in which the subject is further discussed.

In the light of these authorities, which appear directly in point, we are of opinion that appellant is entitled to hold the collateral note, or the proceeds thereof, as security for its entire claim against the bankrupt, and that the court below was in error in deciding otherwise. The decree must therefore be reversed, and the cause remanded for further proceedings in accordance with the views herein expressed.

Reversed.

(249 Fed. 39)

CITY OF GOLDFIELD, COLO., v. ROGER.

ROGER v. CITY OF GOLDFIELD, COLO.

(Circuit Court of Appeals, Eighth Circuit. February 23, 1918.)

Nos. 4831, 4832.

1. APPEAL AND ERROR ⟹759—BRIEFS—ASSIGNMENTS OF ERROR.
   Assignments of error, not set out in plaintiff in error's brief, as required by rule 24 (150 Fed. xxxiii, 79 C. C. A. xxxiii), cannot be considered.

2. APPEAL AND ERROR ⟹846(5)—REVIEW—MATTERS REVIEWABLE.
   In the national courts, where a cause is tried to the court without a jury, and no special findings are made, and none requested, there is nothing for review by an appellate court.

3. TRIAL ⟹393(1)—FINDINGS—SPECIAL FINDINGS.
   Where, in an action tried to the court, an opinion stating certain facts was filed, the facts recited cannot be treated as special findings.

4. APPEAL AND ERROR ⟹110—REVIEW—NEW TRIAL.
   Where, after entry, plaintiff filed motion to reconsider and enlarge the judgment, and such motion was denied, and exceptions taken, the motion, being practically a motion for new trial, cannot be reviewed on writ of error.

In Error to the District Court of the United States for the District of Colorado; Robert E. Lewis, Judge.

Action by John Roger against the City of Goldfield, Colo. There was a judgment for plaintiff for part only of the relief sought, and plaintiff brings error, and defendant likewise brings error. Affirmed.

⟹For other cases see same topic & KEY-NUMBER in all Key-Numbered Digests & Indexes

Digitized by Google

W. M. Alter, of Victor, Colo. (Edward J. Boughton, of Victor, Colo., on the brief), for plaintiff in error in No. 4831 and for defendant in error in No. 4832.

C. A. Ballreich, of Pueblo, Colo. (W. L. Hartman, of Pueblo, Colo., on the brief), for defendant in error in No. 4831 and for plaintiff in error in No. 4832.

Before SANBORN and SMITH, Circuit Judges, and TRIEBER, District Judge.

TRIEBER, District Judge. These are writs of error to review a judgment at law tried to the court without a jury, both parties prosecuting writs of error.

[1] The brief filed by counsel on behalf of the plaintiff in error in No. 4831 fails to set out the assignments of error upon which they rely, as required by rule 24 (150 Fed. xxxiii, 79 C. C. A. xxxiii) of this court. In City of Lincoln v. Sun Vapor Street Light Co., 59 Fed. 756, 8 C. C. A. 253, this court announced that the provisions of this rule, particularly in respect to assignments and specifications of error in briefs will be strictly enforced by the court. The opinion in that case was filed January 29, 1894, and has been enforced ever since. The judgment against the city must therefore be affirmed.

[2] In No. 4832 the same result is reached. As hereinbefore stated, the case was tried to the court without a jury. No special findings were made by the court, nor did either of the parties request the court to make them. The rule of law is well settled in the national courts that in a cause tried to the court without a jury, where no special findings are made, and none requested, there is nothing to be reviewed by the appellate court.

[3] The court filed an opinion in which it states certain facts, but facts recited in the opinion of the court cannot be treated as special findings in the cause. National Bank of Commerce v. First National Bank, 61 Fed. 809, 10 C. C. A. 87; Hinkley v. City of Arkansas City, 69 Fed. 768, 16 C. C. A. 395; Insurance Co. v. International Trust Co., 71 Fed. 88, 17 C. C. A. 616; National Masonic, etc., Ass'n v. Sparks, 83 Fed. 225, 28 C. C. A. 399; Townsend v. Beatrice Cemetery Ass'n, 138 Fed. 381, 70 C. C. A. 521; Mason v. United States, 219 Fed. 547, 135 C. C. A. 315.

[4] Aside from this, no exceptions were taken by the plaintiff at the trial to the judgment of the court. The only exception taken by the plaintiff was:

> "To the findings of the court as to the amount due the plaintiff and to the order of judgment entered herein, so far as the amount in the judgment is concerned, and to the order of court overruling plaintiff's motion to enlarge the judgment, which order was entered of record on the 13th of April, 1916, and to the several rulings by the court pertaining to the evidence, all as aforesaid, the plaintiff by his counsel duly excepts."

The judgment was entered on March 6, 1916; the motion of plaintiff to enlarge the judgment was filed on March 20, 1916; the order denying the motion of plaintiff for reconsideration of the judgment was entered April 15, 1916, 40 days after the judgment had been entered

Digitized by Google

and the exceptions were taken to the overruling of the motion. The motion for reconsidering and enlarging the judgment was practically a motion for a new trial, and that cannot be reviewed by this court.

The judgment is in all things affirmed.

(249 Fed. 41)

HARRIS v. UNITED STATES.

(Circuit Court of Appeals, Eighth Circuit. February 16, 1918.)

No. 4982.

1. CRIMINAL LAW ⟹1130(2)—APPEAL—BRIEFS—ASSIGNMENTS OF ERROR.
   Assignments of error, not set out in plaintiff in error's brief as required by rule 24 (150 Fed. xxxiii, 79 C. C. A. xxxiii), cannot be considered.
2. INDIANS ⟹35—INDIAN COUNTRY—WHAT IS.
   Kelliher, in the county of Beltrami, state of Minnesota, which is within the exterior boundaries of the territory ceded to the United States by the Chippewa Treaty of February 22, 1855 (10 Stat. 1165), is Indian territory.
3. CRIMINAL LAW ⟹742(1)—APPEAL—PROVINCE OF JURY.
   The jury is the sole judge of the credibility of witnesses.
4. INDIANS ⟹38(1)—INDIAN TERRITORY—INTRODUCTION OF INTOXICATING LIQUOR.
   In a prosecution for introducing or causing to be introduced, into Indian territory intoxicating liquors, in violation of Rev. St. § 2139, as amended by Act Feb. 27, 1877, c. 69, 19 Stat. 244, and by Act July 23, 1892, c. 234, 27 Stat. 260 (Comp. St. 1916, § 4136a), where the alleged offense was committed after the passage of Act May 18, 1916, c. 125, 39 Stat. 124 (Comp. St. 1916, § 4144a), making the possession of intoxicating liquors in country where the introduction is prohibited by treaty or federal statute prima facie evidence upon unlawful introduction, the question of defendant's guilt *held*, under the evidence, properly submitted to the jury.

   Sanborn, C. J., dissenting.

In Error to the District Court of the United States for the District of Minnesota; Page Morris, Judge.

James O. Harris was convicted of wrongfully, unlawfully, and feloniously introducing and causing to be introduced into Indian territory intoxicating liquors in violation of Rev. St. § 2139, as amended by Act Feb. 27, 1877, and Act July 23, 1892, and he brings error. Affirmed.

A. A. Andrews, of Bemidji, Minn., for plaintiff in error.

Alfred Jaques, U. S. Atty., of Duluth, Minn., for the United States.

Before SANBORN, Circuit Judge, and TRIEBER and YOUMANS, District Judges.

TRIEBER, District Judge. This is a writ of error to reverse a judgment entered upon a verdict of guilty rendered by a jury. The defendant was indicted in two counts for having violated section 2139, Rev. St., as amended by Act Feb. 27, 1877, c. 69, 19 Stat. 244, and Act July 23, 1892, c. 234, 27 Stat. 260 (Comp. St. 1916, § 4136a).

The first count charges that the defendant on the 30th day of May,

---

⟹For other cases see same topic & KEY-NUMBER in all Key-Numbered Digests & Indexes

Digitized by Google

1916, at Kelliher in the county of Beltrami, in the state and district of Minnesota, had wrongfully, unlawfully, and feloniously introduced and caused to be introduced into Indian country, to wit, into the said county of Beltrami, at Kelliher aforesaid, intoxicating liquors, to wit, 3½ gallons of whisky, which said Kelliher is within the exterior boundaries of the territory ceded to the United States by the Chippewa Treaty of February 22, 1855 (10 Stat. 1165). The second count charges a like offense, committed on the 29th day of July, 1916.

There was a trial to a jury and a verdict of not guilty on the first count, and a verdict of guilty on the second count, upon which the court sentenced him to a fine and imprisonment. We are only concerned with the verdict on the second count.

[1] The brief of the plaintiff in error failed to set out any assignment of errors as required by rule 24 of this court (150 Fed. xxxiii, 79 C. C. A. xxxiii). In City of Goldfield v. John Roger, 249 Fed. 39, 161 C. C. A. 99, decided at this term, we have held upon the authority of City of Lincoln v. Sun Vapor Street Light Co., 59 Fed. 756, 8 C. C. A. 253, that the failure to comply with that rule, particularly in respect to assignments and specifications of error in briefs, will prevent a consideration of the assignments of error by this court. But, in view of the fact that in this case the liberty of the defendant is at stake, we shall dispose of the case on its merits.

[2] The assignments of error bring only one question before this court: Did the court err in refusing to direct a verdict of not guilty at the close of the evidence, although other errors have been argued by counsel? In view of the decision of the Supreme Court in Johnson v. Gearlds, 234 U. S. 422, 34 Sup. Ct. 794, 58 L. Ed. 1383, the contention that the place where the liquor was found in the possession of the defendant is not Indian country cannot be sustained.

[3, 4] As the offense was committed after the enactment of Act May 18, 1916, c. 125, 39 Stat. 124 (Comp. St. 1916, § 4144a), amending sections 2140 and 2141, Rev St, possession of intoxicating liquor in the country where the introduction is prohibited by treaty or federal statute, is made prima facie evidence of unlawful introduction. Three witnesses introduced by the government testified positively that on July 29, 1916, the date upon which the introduction of the liquor is charged in the second count to have been committed, they found a quart of whisky in defendant's barroom in Kelliher, under the bar, and that the defendant was present at the time, and also Stone, his barkeeper, the latter behind the bar.

The defendant testified that he was not in the barroom at the time the witnesses for the government came there, but he came in while they were there, and they had about ten bottles of malt set up on the bar; that he bought the stuff for malt, and not for beer; that there was no liquor there that he knew of, but only this beer or malt. Another witness introduced by the defendant was Pete McGinty, who testified that he was selling whisky unlawfully, and that he sold whisky to defendant, at Kelliher, having brought it there; that he would sell him about two quarts of whisky every week or two, after bringing it there.

Digitized by Google

William Johnson, who was recalled by the government, testified in rebuttal that the witness McGinty told him that he came to Minnesota from North Dakota the fall after this liquor had been found in the possession of the defendant. He was then tending bar for a man by the name of Bagley.

As no exceptions were taken to the charge of the court, which submitted the question of facts to the jury, the finding of the jury is conclusive, if there is substantial evidence to sustain it. If the jury believed the witnesses introduced on the part of the government, then under the act of May 18, 1916, the government made out a prima facie case, subject to rebuttal by the defendant. The jury were the sole judges of the credibility of the witnesses. If they believed the testimony of the defendant and the witness McGinty then the prima facie presumption was rebutted, but on the other hand if they discredited the testimony of these witnesses, which they did, the verdict of guilty was justified. The witness McGinty was impeached by Mr. Johnson, and in fact by himself, when he testified that he was engaged in introducing intoxicating liquors in the prohibited territory, in violation of the laws of the United States. It was for the jury to determine what weight to give to his testimony and that of the defendant, taking into consideration the interest the defendant had in the result of the trial. The court committed no error in submitting the question to the jury.

The judgment is affirmed.

SANBORN, Circuit Judge, dissents.

(249 Fed. 43)

PHELAN v. UNITED STATES.

(Circuit Court of Appeals, Ninth Circuit. April 1, 1918. Rehearing Denied May 13, 1918.)

No. 3086.

1. CRIMINAL LAW ⟹430, 441—DRAFT—REGISTRATION—EVIDENCE.
In a prosecution for failing to register in accordance with Selective Draft Act May 18, 1917, c. 15, 40 Stat. 76, baptismal records and copies of applications for a pension and for homestead, executed by defendant's mother, wherein she set out his age, are admissible in evidence.

2. ARMY AND NAVY ⟹40—DRAFT—REGISTRATION—EVIDENCE.
In a prosecution for failing to register under Selective Draft Act May 18, 1917, c. 15, where the baptismal record of defendant, made by a Roman Catholic priest, was introduced in evidence, it was competent for the priest to testify as to the tenets of his faith concerning the baptism of infants.

3. CRIMINAL LAW ⟹430—EVIDENCE—CERTIFIED COPIES.
Under Rev. St. § 882 (Comp. St. 1916, § 1494), providing for the admission of copies of records of executive departments, certified copies of pension applications, which are part of the records of the Pension Bureau, are admissible in evidence.

4. CRIMINAL LAW ⟹730(1)—TRIAL—IMPROPER ARGUMENT.
Improper argument of the prosecutor is no ground for reversal, where the jury were explicitly directed to disregard it.

⟹For other cases see same topic & KEY-NUMBER in all Key-Numbered Digests & Indexes

Digitized by Google

In Error to the District Court of the United States for the Southern Division of the Southern District of California; Benj. F. Bledsoe, Judge.

Edward H. Phelan was convicted of failing to register in accordance with Selective Draft Act May 18, 1917, c. 15, and he brings error. Affirmed.

Isidore B. Dockweiler and Dockweiler & Mott, all of Los Angeles, Cal. (G. C. O'Connell, of Los Angeles, Cal., of counsel), for plaintiff in error.

Robert O'Connor, U. S. Atty., and Gordon Lawson, Asst. U. S. Atty., both of Los Angeles, Cal.

Before GILBERT, ROSS, and MORROW, Circuit Judges.

ROSS, Circuit Judge. We see no merit in any of the contentions on behalf of the plaintiff in error. The indictment against him charged, among other things, that on the 5th day of June, 1917, he was over 21 years of age and had not then attained the age of 31 years, and that notwithstanding the fact that the said 5th day of June was the day appointed by proclamation of the President for the purpose, and that the said plaintiff in error did not come within any of the exceptions contained in the act of Congress in pursuance of which the said proclamation was issued, to wit, the act approved May 18, 1917, entitled "An act to authorize the President to increase temporarily the military establishment of the United States," the said plaintiff in error willfully failed and refused to present himself for and submit to registration thereunder.

The record shows that the sole defense interposed by the plaintiff in error in the court below was based upon the contention that he was born March 13, 1886, and was therefore more than 31 years old on the 5th day of June, 1917. The proof on the part of the government, given on the trial, tended to show that he was in fact born July 13, 1886, and was therefore not 31 years old June 5, 1917. The jury found that issue in favor of the government, and accordingly returned a verdict of guilty, upon which verdict judgment was duly entered.

[1-3] The testimony of the plaintiff in error, as well as that of his mother, given on the trial, was to the effect that he was born March 13, 1886; but even in that testimony both of them admitted that up to within about four years of the time of the trial the plaintiff in error was under the "impression" that his birthday was July 13, 1886. The government offered, and there was admitted in evidence over the objections of the defendant, copies, duly certified by the Commissioner of Pensions, of certain applications, filed years before the giving of her testimony in the present case by the mother of the plaintiff in error, for a pension as the widow of the father of the plaintiff in error, who was a soldier in the Civil War, in which applications she expressly declared the plaintiff in error was born July 13, 1886; and the government also offered, and there was admitted in evidence, also over the objections of the defendant, a petition for a homestead, filed by the mother of the plaintiff in error February 9, 1892, in the superi-

Digitized by Google

or court of Los Angeles county, in the matter of the estate of her deceased husband, in which petition she stated, among other things, at the time of the death of her husband, which occurred June 1, 1889, that the plaintiff in error was born July 13, 1886; and there was other testimony given on behalf of the government of the same tendency—among which was that of Monsignor Harnett, of the Catholic Church, who testified in substance that as priest he was called upon to and did baptize the plaintiff in error at the residence of his parents; that by the requirements of his church the priest is obliged to record the date of the baptism of infants, and did so in the instant case; the witness saying:

"I have the baptismal record of the year 1886 with me, and there is recorded in that book the baptismal record of the defendant, Edward Henry Phelan. I baptized the child, and after referring to the record can state the date of the baptism"—giving it as August 8, 1886.

The witness was further permitted to testify, over the objection and exception of the defendant, as follows:

"The teaching of the Catholic Church with regard to the death or with regard to the salvation of infants who die without baptism is that no one, no child who is unbaptised and dies before it obtains the use of reason, can enter into the kingdom of Heaven."

We think that all of the testimony referred to, to which objection was taken, tended to sustain the contention of the government that the true date of the birth of the plaintiff in error was July 13, 1886, and accordingly that the objections were properly overruled.

The objections to the introduction in evidence of the certified copies of the records of the Pension Bureau are sufficiently answered by the provisions of the statutes of the United States. Act Aug. 24, 1912, c. 370, 37 Stat. part. 1, pp. 497, 498 (Comp. St. 1916, §§ 675–680).

[4] Conceding the impropriety of the remarks of the United States attorney complained of, the error, if any, was, we think, sufficiently cured by the instructions of the court to the effect that the jury should "not consider the remarks of the United States attorney, coming to a conclusion from this evidence. The jury have no right to consider any evidence that was excluded."

The judgment is affirmed.

Digitized by Google

(249 Fed. 46)

THE DIXIE.

(Circuit Court of Appeals, Fifth Circuit. March 4, 1918. Rehearing Denied April 10, 1918.)

No. 3081.

MARITIME LIENS ⟹64—SUIT TO ENFORCE—SUFFICIENCY OF LIBEL.

A libel alleged that libelant hired or chartered a barge to a contracting company which owned the dredge Dixie, that the Dixie was engaged in dredging a bar in the Mississippi river and depositing the material at a designated place on the shore, that during a part of the time the barge was used to support the pipe which conveyed the dredged material from the Dixie to the shore, and that while being so used the barge was sunk. *Held*, that no facts were alleged which gave libelant a maritime lien on the Dixie for the loss.

Appeal from the District Court of the United States for the Eastern District of Louisiana; Rufus E. Foster, Judge.

Suit in admiralty by the River Sand & Gravel Company against the steam dredge Dixie; the Board of Commissioners of the Port of New Orleans and others claimants. Decree for respondents (236 Fed. 607), and libelant appeals. Affirmed.

John D. Grace, of New Orleans, La. (M. D. Grace, on the brief), for appellant.

James Wilkinson and P. M. Milner, both of New Orleans, La., for appellees.

Before WALKER and BATTS, Circuit Judges, and NEWMAN, District Judge.

WALKER, Circuit Judge. This is an appeal from a judgment or decree dismissing a libel in admiralty against the dredge Dixie on an exception thereto by the claimant, based upon the stated ground that:

"Said libel on its face discloses that there is no maritime lien asserted in said libel against the dredge Dixie, which alone could give this court jurisdiction."

The libel discloses the following facts: The Dixie is a steam dredge, owned by the Louisiana Contracting Company, which company was engaged in performing a contract it had entered into with the board of commissioners of the port of New Orleans. Included in the work called for by that contract was the dredging of a bar or shoal in the channel of the Mississippi river opposite a designated site on the New Orleans river front and the placing of the dredged material on that site. The Dixie was used in doing the dredging called for and depositing the dredged material at the place mentioned. The contracting company hired or chartered from the libelant another dredge, called the Katherine, and a barge, called the Texas, and used those vessels in doing part of the work called for by the contract; some of that work, as stated, apparently a different part of it, being done by the Dixie. During part of the time while the Texas was so used, it being

Digitized by Google

in a position between the Dixie and the river bank, the part of the Dixie's dredging machinery which reached to the place where the dredged material was being deposited rested on or was supported by the Texas. While the Texas was hired or chartered as above stated, it was sunk. All that the libel alleges in this connection is the following:

"While said barge was so employed with the Dixie and by her officers and crew, they permitted said vessel to sink; and, although they have promised to make due efforts to recover said barge and make due return thereof, they have neglected to do so."

The libel does not set out the contracts or charters under which the Katherine and the Texas were hired, nor state the substance of the terms or provisions thereof. It does undertake to show what those contracts imported or the legal effect of them. What the libel contains in that regard amounts to statements of legal opinions or conclusions of the pleader, and as such need not be considered. The libel does not allege facts showing that the Katherine or the Texas was hired in behalf, for the use or on the credit of the Dixie, nor that either of them or the use of either of them was furnished to the Dixie. The libel does not show that the sinking of the Texas was due in any degree to a fault or negligence attributable to the Dixie, or to any breach of duty by any of her officers or crew while acting as such.

The contrary not appearing, it may be presumed that the Katherine and the Texas were hired on the credit of the hirer alone, and that the Dixie was not looked to by the libelant as incurring any responsibility to it as a result of the chartering or hiring. We are not of opinion that the libel shows the existence of any liability which is enforceable against the Dixie. It does not show the furnishing of repairs, supplies, or other necessaries to the Dixie in such sort as to give a maritime lien on the vessel under the Act of June 23, 1910, c. 373, § 1, 36 Stat. 604 (7 U. S. Comp. Stat. Ann. § 7783). It does not show the furnishing of anything to the Dixie or on its credit or responsibility. It does not show the commission of a maritime tort for which the Dixie is subject to be libeled. It does not show that the Dixie was made liable in any way as a result of the transactions alleged.

The conclusion is that the libel was properly dismissed. The decree to that effect is affirmed.

Digitized by Google

(249 Fed. 48)

WARTEN v. BROWN et al.

(Circuit Court of Appeals, Fifth Circuit. March 7, 1918.)

No. 3068.

GAMING ⟹2—RECOVERY OF MONEY—WHAT LAW GOVERNS.

Code Ala. 1907, § 3353, declaring that money paid on futures may be recovered, has no application to transactions occurring without the borders of the state, and furnishes no right of recovery, even though the action on the transaction was brought in the federal District Court for Alabama.

In Error to the District Court of the United States for the Northern District of Alabama; Wm. I. Grubb, Judge.

Action by F. G. Brown, John Douglass, and Herman Blum, heretofore copartners doing business under the firm name of Brown, Douglass & Blum, for the use of Herman Blum, transferee, against L. M. Warten, as surviving partner of the firm of H. & L. M. Warten, who pleaded a set-off. There was a judgment for plaintiffs, and defendant brings error. Affirmed.

W. R. Walker, of Athens, Ala., for plaintiff in error.

S. L. Sinnott and J. T. Stokely, both of Birmingham, Ala., for defendants in error.

Before WALKER and BATTS, Circuit Judges, and FOSTER, District Judge.

WALKER, Circuit Judge. Brown, Douglass & Blum, a firm engaged in business in New Orleans, La., at the request of H. & L. M. Warten, made payments to third persons having demands against H. & L. M. Warten, which the latter desired to satisfy. This suit was brought against the surviving partner of H. & L. M. Warten to recover the amounts for which that firm so became indebted. By way of set-off and cross-demand the defendant set up that Brown, Douglass & Blum were liable to him as surviving partner for an amount greater than that sued for, which was lost in alleged gambling cotton futures transactions of H. & L. M. Warten with Brown, Douglass & Blum in New Orleans. The law relied on to support this cross-demand is the following Alabama statute:

"*Money Paid on 'Futures' may be Recovered.*—Any money or thing paid or delivered to any person, whether as principal, agent, or broker, in furtherance or settlement of any contract made in violation of this article, may be recovered in any action brought by the person paying the same, his wife or child." Code of Alabama 1907, § 3353.

This statute does not purport to govern, or to determine the legal consequences of, transactions occurring outside of the state of Alabama. As above stated, the alleged gambling transactions relied on occurred in the state of Louisiana. The legal consequences of those transactions are to be determined by the law of that state. It is not

Digitized by Google

contended that the law of Louisiana gives a right of action to recover money lost in gambling in "futures." What is asserted by way of cross-demand amounts to a claim that under an Alabama statute a right of action arose out of transactions in Louisiana, though under the law of the latter state those transactions did not have that effect. A claim that a transaction gave rise to a right of action cannot be sustained, if the law of the place where the transaction occurred did not give to it the effect of bringing into existence the liability asserted. A right of action which is the creature of an Alabama statute does not arise out of an occurrence happening in the state of Louisiana. Unless by the law of the place where an act is done it gives rise to an asserted civil liability, that liability does not exist there or elsewhere. Slater v. Mexican National R. R. Co., 194 U. S. 120, 24 Sup. Ct. 581, 48 L. Ed. 900; Alabama Great Southern R. Co. v. Carroll, 97 Ala. 126, 134, 11 South. 803, 18 L. R. A. 433, 38 Am. St. Rep. 163; Pendar v. H. & B. American Machine Co., 35 R. I. 321, 87 Atl. 1, L. R. A. 1916A, 428; 12 Corpus Juris, 452, 453. It is not material that the liability would have been imposed by the law of the state in which redress is sought, if the transaction on which the claim is based had happened there.

The conclusion is that the court was not in error in ruling against the above-mentioned cross-demand.

The judgment is affirmed.

Digitized by Google

(249 Fed. 50)

GILL v. WHITE.

(Circuit Court of Appeals, Ninth Circuit. April 1, 1918.)

No. 2999.

BANKRUPTCY ⟹407(3)—DISCHARGE—GROUNDS FOR DENIAL.

That the bankrupt fraudulently transferred property more than four months prior to the filing of the petition is no ground for opposing his discharge.

Appeal from the District Court of the United States for the First Division of the Northern District of California; M. T. Dooling, Judge.

In the matter of the bankruptcy of Fillmore White. The specifications of objections to the discharge filed by Eva May Gill were overruled, and the discharge granted, and the objector appeals. Affirmed.

Robert H. Countryman, of San Francisco, Cal., for appellant.

Reuben G. Hunt, of San Francisco, Cal., for appellee.

Before GILBERT, ROSS, and HUNT, Circuit Judges.

GILBERT, Circuit Judge. The appellee, who was a bankrupt, petitioned for his discharge. The appellant filed specifications of objection to the discharge. The objections were overruled, and the bankrupt was granted a discharge. The appellant assigns error to the refusal of the referee to permit the appellant to call the bankrupt's wife as a witness on the hearing of the specifications of objection. The referee's ruling was based on the amendment of June 29, 1906 (34 Stat. 618, c. 3608), to section 858 of the Revised Statutes (Comp. St. 1916, § 1464), as construed in In re Kessler (D. C.) 225 Fed. 394, and upon subdivision 1 of section 1881 of the Code of Civil Procedure of California, which provides, with certain exceptions, that a husband cannot be examined for or against his wife without her consent, nor a wife for or against her husband, without his consent. The District Court affirmed the ruling of the referee on the ground that the alleged fraudulent transfer of property, concerning which the appellant wished to elicit the testimony of the bankrupt's wife, occurred more than four months prior to the filing of the petition in bankruptcy, and therefore was not ground for opposing the discharge of the bankrupt.

Agreeing to that conclusion, we affirm the order of the court below.

⟹For other cases see same topic & KEY-NUMBER in all Key-Numbered Digests & Indexes

Digitized by Google

(249 Fed. 51)

SANTOWSKY v. McKEY.

(Circuit Court of Appeals, Seventh Circuit. January 25, 1918.)

No. 2496.

JUDGMENT ⟹564(2)—MATTERS CONCLUDED—TEMPORARY RESTRAINING ORDER.

A temporary restraining order, made on application for a temporary injunction in any suit pending, is not a final determination, which renders the issues involved res judicata.

Petition to Review and Revise an Order of the District Court of the United States for the Eastern Division of the Northern District of Illinois.

Petition by Louis Santowsky against Frank M. McKey, trustee in bankruptcy, to revise a decree confirming an order of the referee, denying petitioner's title to property. Reversed.

Bernard J. Brown, of Chicago, Ill., for petitioner.

S. Sidney Stein and Julius Moses, both of Chicago, Ill., for respondent.

Before BAKER, ALSCHULER, and EVANS, Circuit Judges.

EVAN A. EVANS, Circuit Judge. If the order of July 5, 1916, here under consideration, was determinative merely of bankrupt's petition bearing date May 6, 1916, to dissolve a temporary injunction entered May 5, 1916, we are convinced that the trustee's position is untenable. A temporary restraining order made on application for a temporary injunction in any suit pending is not a final determination of the issues involved. Such an order is not res judicata of the issues temporarily disposed of thereby. Black on Judgments (2d Ed.) § 695.

Upon a careful consideration of all the orders made and proceedings had in this bankruptcy matter, we are convinced that the District Court, by its order of July 5, 1916, disposed of no matter other than the bankrupt's petition of May 6, 1916, which sought dissolution of the temporary injunction, and the order of July 6, 1916, is therefore not res judicata as to the title to the property here in controversy.

The decree of the District Court, confirming the order of the referee bearing date July 28, 1916, is reversed, with directions to proceed to determine the title to the property in controversy.

⟹For other cases see same topic & KEY-NUMBER in all Key-Numbered Digests & Indexes

Digitized by Google

(249 Fed. 52)

AUTOMATIC PENCIL SHARPENER CO. v. STEWART MFG. CO. et al.

(Circuit Court of Appeals, Seventh Circuit. January 2, 1918.)

No. 2493.

1. PATENTS ⟹328—VALIDITY—INVENTION.
Webster patent, No. 640,846, for a pencil sharpener containing a cutter with spiral blades, *held* valid.

2. PATENTS ⟹81—INVALIDITY—SUBSEQUENT PATENT.
A patent is not open to attack because the invention was disclosed in a patent subsequently issued, where there was no clear showing of prior use of the device last patented.

3. PATENTS ⟹328—INFRINGEMENT—WHAT CONSTITUTES.
Webster patent, No. 640,846, for a pencil sharpener containing a cutter provided with spiral blades, *held* infringed by defendant's device.

4. PATENTS ⟹328—INFRINGEMENT—WHAT CONSTITUTES.
The Webster patent, No. 810,104, for a pencil sharpener provided with bearings at opposite ends of the frame, *held* not infringed by defendant's device.

5. PATENTS ⟹328—INFRINGEMENT—WHAT CONSTITUTES.
The Baines patent, No. 839,806, for a pencil sharpener having an adjustable stop in the frame, *held* not infringed by defendant's device.

6. TRADE-MARKS AND TRADE-NAMES ⟹59(1)—INFRINGEMENT—"JUNIOR."
Though complainant registered a trade-mark "Junior" for a pencil sharpener, it was no infringement of the same for defendant, who previously sold pencil sharpeners under the name "Stewart," to offer to the trade smaller pencil sharpeners under the name of "Stewart Junior," for the word "Junior," with respect to merchandise, signifies a more recent product, or a smaller type or model.

[Ed. Note.—For other definitions, see Words and Phrases, First and Second Series, Junior.]

Appeal from the District Court of the United States for the Eastern Division of the Northern District of Illinois.

Bill by the Automatic Pencil Sharpener Company against the Stewart Manufacturing Company, a corporation, and another. From a decree dismissing the bill, complainant appeals. Reversed, with directions.

From a decree dismissing appellant's bill to enjoin future infringement of Webster patents, No. 640,846 and No. 819,104, and Baines patent, No. 839,806, for pencil sharpeners, and for damages arising out of past infringements, and also for an injunction against alleged unfair trade competition with relation to appellant's registered trade-mark "Junior" for pencil sharpeners, this appeal is taken. Claims 4 and 5 of the Webster patent No. 640,846, dated January 9, 1900, read as follows:

"4. In a pencil sharpener, a cutter provided with spiral blades, said cutter being mounted upon an axle upon the opposite end of which is a pinion, an internal gear secured to the stationary casing, and with which said pinion meshes, said axle being mounted in a bearing which is mounted upon a second axle, a crank secured to said second axle, and a block secured upon said second axle adjacent to said cutter, and provided with a conical groove adapted to receive a pencil and direct and hold the same against the said cutter, substantially as and for the purpose set forth.

"5. In a pencil sharpener, a shaft or axle *13*, internal gear *21*, block *16* and hub *17* mounted on said axle, an axle *19* mounted in said hub and carrying pinion *20*, cutter *23* mounted on axle *19*, said block *16* being provided with the conical groove *25*, substantially as and for the purpose set forth."

Digitized by Google

Claims 1 and 3 of the Webster patent, No. 819,104, issued May 1, 1906, read as follows:

"1. In a pencil sharpener, the combination of the frame comprising the disks *9* and *10* with the block *11* connecting the same, bearings at opposite ends of the frame, a crank for rotating the same, bearings *19* and *20* in the said disks at an angle to the disks, the shaft *18* fitted to the said bearings, the sharpening cylinder *16* carried by the said shaft and gearing arranged and operated to rotate the sharpening cylinder when the frame is turned by the crank."

"3. In a pencil sharpener, the combination of the frame comprising the disks *9* and *10* with the block *11* connecting the same, a casing provided with bearings for the opposite ends of the frame and having a box *48* to receive the shavings, a crank for rotating the frame in the casing, bearings *19* and *20* in the said disks at an angle to the axis of the disks, the shaft *18* fitted to the said bearings, the sharpening cylinder *16* carried by said shaft and gearing arranged and operated to rotate the sharpening cylinder when the frame is turned by the hand crank."

Claims 8 and 10 of the Baines patent, No. 839,806, issued January 1, 1907, read as follows:

"8. In a pencil-sharpening machine a cutter cylindrical in form and having helically arranged cutting edges, a frame mounted to rotate in a stand or casing and carrying the cutter at an angle with the axis about which said frame rotates, a guide for the pencil in the axis of said frame, an adjustable stop in the frame to limit the longitudinal movement of the pencil, and means to rotate the said cutter and give it a planetary motion."

"10. In a pencil-sharpening machine the combination of a rotary device provided with helically arranged cutting edges, means for imparting both a rotary and planetary motion thereto, and of an adjustable stop carried by the frame to limit the longitudinal movement of the pencil."

The foregoing are the only claims involved in this suit. Defenses are noninfringement and invalidity.

Henry M. Huxley, of Chicago, Ill., for appellant.

Chas. S. Burton, of Chicago, Ill., for appellees.

Before BAKER, ALSCHULER, and EVANS, Circuit Judges.

EVAN A. EVANS, Circuit Judge (after stating the fact as above). [1] *Webster First Patent, No. 640,846.*—Of the nine elements which comprise the sharpener defined in claim 4, quoted above, the element described as "a cutter provided with spiral blades" is claimed to be unique, and when used in the combination set forth in this claim constitutes the basis for one of the contributions which Webster made to this art. The patentee emphasized this element in his specifications by saying:

"On the free end of the shaft I mount a cutter which in shape is a frustum of a cone and is provided with a plurality of spiral blades and the block (*16*) is provided on the side adjacent to the cutter with a conical shaped groove, which is adapted to receive the end of a pencil and sustain and direct the same against the cutter, as will be readily understood by an inspection of the drawings. * * * It will be observed that the blades on the cutter are made spiral and so disposed that as the cutter is rotated the cutting will be from the point of the pencil backward, thereby giving a fine, long point, without breaking the lead."

The block and the mechanism for rotating the cutter and the block about the pencil supply the means for utilizing the spiral bladed cutter. The advantages of providing a cutter so that each sharpening spiral blade performs a progressive shaving action, beginning at the

Digitized by Google

point of the lead and moving backward, over a cutter that scrapes like a file, is so obvious that, in the absence of any disclosure in the prior art, invention is apparent. Appellant produced a pencil sharpener which for the first time sharpened the pencil from the point back. This machine, by means of the spiral blades, cut thin shavings along the wood and avoided the difficulties that were met in case a file were used.

Appellees, however, contend that the prior art, represented by two patents, one to Rice, No. 230,338, granted July 28, 1880, and one to Hoffman, No. 291,597, granted January 7, 1884, anticipated appellant's invention. The Hoffman patent is but an improvement of the Rice patent. Hoffman, in his specifications, says:

"My improvement has been designed with special reference to the needs of the pencil sharpener described in letters patent No. 230,338, * * * and it is in this connection that I have illustrated it in the accompanying drawings. * * * and parts thus far described are substantially the same in construction and operation as those described in letters patent No. 230,338, above referred to, and require no further description here."

The contribution to the art made by Rice and Hoffman was chiefly in the use of a rotary file, which both patentees used to point the lead in the pencil. Neither patent provided for the use of its rotary file to cut the wood. Had such a file been provided, it would have soon become clogged with grains of wood and would not have performed its work. Appellant's sharpener is distinguished from both the Rice and Hoffman devices in two important respects. It cut the lead and the wood at the same time, avoiding the consequences that would result in case a file were applied to the wood. A sharpener was also provided wherein the sharpening began at the point of the pencil and worked back. The new features of appellant's sharpener were not disclosed by either the Hoffman or the Rice patents.

[2] Appellant contends that the Eager patent, No. 648,900, May 1, 1900, described an invention having a cutter of the milling tool type and so mounted with respect to the pencil seat as to rotate in the proper direction to cut back from the point of the pencil in the same manner as the cutter of the Webster patent. This patent, however, was issued subsequent to the date of the patent under consideration, and the evidence as to any prior use of such machine is too meager and unsatisfactory to justify us in upsetting appellant's patent on that ground. While the Eager machine is distinguishable from the machine described in Webster's first patent in other respects, it is not necessary, in view of the dates of issuance of the two patents, to point out the distinguishing features.

We conclude claims 4 and 5 of the Webster first patent are valid. The latter claim is sustained, in view of this discussion, without further elaboration.

[3] *Noninfringement.*—Appellees urge that no infringement of this patent is disclosed, because in its cutter the third element in this claim, No. 4, a pinion, must be located upon the opposite end of the "axle," which is the second element of the claim. It does not seem to us that the location of the pinion is a necessary or an essential part of this

Digitized by Google

third element. In the particular drawing to which reference was made, it is true the pinion was located at the opposite end of the axle; but the location of the pinion was not the essence of the element so described. The claim, fairly construed in the light of the drawings and specifications, does not warrant the limitation or restriction which appellees attempt to place upon the location of the pinion.

[4] *Webster Second Patent, No. 819,104—Noninfringement.*—In both claims 1 and 3 of this patent there appears an element described in claim 1 as "bearings at opposite ends of the frame" and in claim 3 as "a case provided with bearings for the opposite ends of the frame," and it is contended that appellees' sharpener is not provided with such "bearings at the opposite ends of the frame." We have examined the appellees' sharpener in vain for the two bearings at the opposite ends. It is clear that appellees' sharpener carries the rotor on its journal bearing at one end of the journal only. True, at the other end there is provided a sleeve occasionally used for a smaller sized pencil, and when so used it serves somewhat as a bearing. We are convinced, however, that appellees' sharpener does not infringe either claim for want of this element above referred to.

[5] *Baines Patent—Noninfringement.*—Appellees further contend that their sharpener does not infringe the Baines patent, No. 839,806, because it does not possess that element found in claims 8 and 10 described as "an adjustable stop in the frame to limit the longitudinal movement of the pencil." Appellees' sharpener is provided with a stop, but it is not an adjustable stop. Its stop is attached to the frame and firmly secured thereto by means of two screws. Appellant's contention is that this stop is adjustable, because it can be removed, and, when turned over, it will occupy a somewhat different position, and thereby becomes adjustable. In other words, it is possible that this stop may be put into two positions, in one of which the pencil is sharpened to a finer point than in the other. Ignoring the fact that it is impracticable to remove the stop and change ends, we do not believe that, if such change is made, adjustability is thereby secured. The word "adjustable" in this claim must be construed in the light of the mechanism to which it is applied. An adjustable stop in a pencil sharpener is a stop that may be so adjusted as to permit the pencil to be sharpened to various degrees of pointedness. Appellant's stop is more in the nature of a fixed stop. It is firmly secured to the frame. We conclude no infringement of this patent appears.

[6] *Trade-Mark "Junior."*—It is further contended that the court erred in refusing an injunction to restrain appellees from using the words "Stewart Junior," because of appellant's trade-mark of the word "Junior." Appellees have at least two pencil sharpeners upon the market. One is known as the "Stewart Junior." The word "Stewart," as written, is a fac simile of the signature of Mr. Stewart, and the word "Junior" appears in smaller type in Roman letters, and immediately beneath the word "Stewart." Appellees deny appellant's right to a trade-mark on the word "Junior," when applied to a manufactured article such as here under consideration. There is much force in their argument. The word "Junior," especially as applied to a man-

Digitized by Google

ufactured article, has a well-known meaning. It indicates the later or more recent product, or a smaller type or model of a machine that has been on the market. In the present case, it appears from the exhibits that appellee's "Junior" is a later and a smaller type of sharpener than was previously manufactured by it.

We conclude appellees were within their rights in so using the word "Junior" in connection with the word "Stewart," and in view of the fact that a similar and larger model of this same sharpener, bearing the name "Stewart" written in the same manner, was in use when the later and smaller model by the same company was placed upon the market. While Webster's patent No. 640,846 has now expired, this suit was instituted some time prior to the expiration of the patent. We therefore conclude that appellant is entitled to an accounting for infringement of this patent prior to its expiration.

The decree is reversed with costs, with directions to enter a decree in favor of appellant for an accounting for infringements of patent No. 640,846.

(249 Fed. 56)

F. B. ZIEG MFG. CO. v. RUSSELL GRADER MFG. CO.

(Circuit Court of Appeals, Sixth Circuit. February 13, 1918.)

No. 3048.

PATENTS ⟹328—VALIDITY AND INFRINGEMENT—ROAD-GRADING MACHINE.

The Clemons patent, No. 924,966, for a road-grading machine, claims 2 and 17, *held* valid, but, as limited by the prior art, not infringed by a machine in which the wheels must always automatically move with the drawbar and parallel with the line of draft.

Appeal from the District Court of the United States for the Southern District of Ohio; John E. Sater, Judge.

Suit in equity, by the Russell Grader Manufacturing Company against the F. B. Zieg Manufacturing Company. Decree for complainant, and defendant appeals. Reversed.

Staley & Bowman, of Springfield, Ohio (Border Bowman and Paul A. Staley, both of Springfield, Ohio, of counsel), for appellant.

A. C. Paul, of Minneapolis, Minn., and A. M. Allen, of Cincinnati, Ohio, for appellee.

Before WARRINGTON, KNAPPEN, and MACK, Circuit Judges.

KNAPPEN, Circuit Judge. This is an appeal by defendant in a patent infringement suit, and involves only claims 2 and 17 of the Clemons patent, No. 924,966, issued June 15, 1909. The District Court held both claims valid and infringed.

The patent is for a road-grading machine, whose mechanism may be described by reference to a reduced reproduction of Fig. 1 of the patent drawings.

⟹For other cases see same topic & KEY-NUMBER in all Key-Numbered Digests & Indexes

Digitized by Google

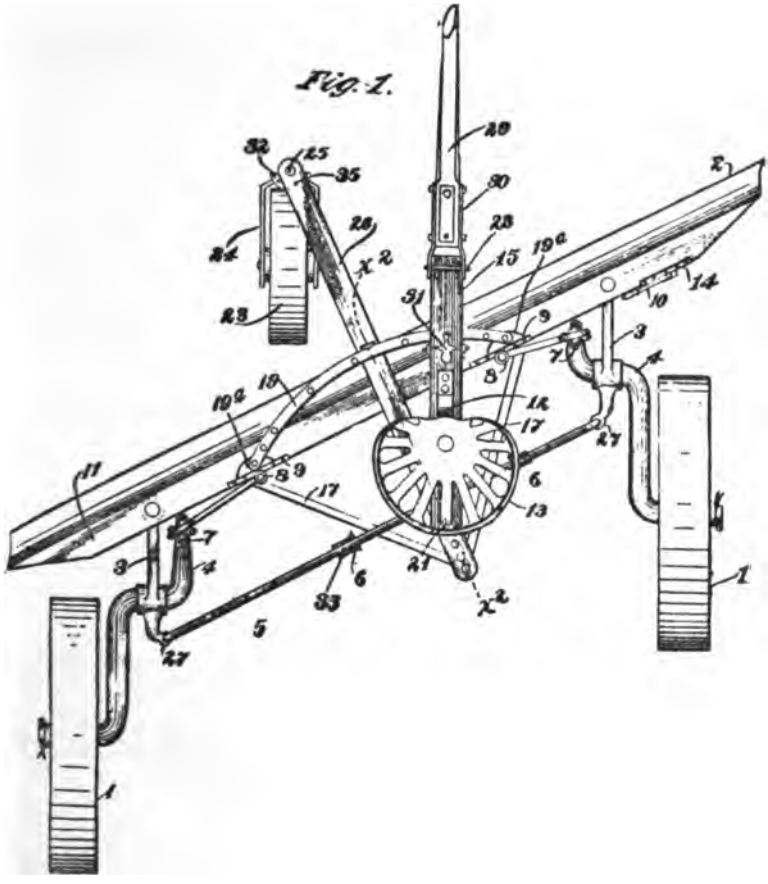

The scraper blade *2* is carried on a frame supported by rear wheels *1* and a forward wheel *23*, which is pivotally connected to the front end of a beam *26*, which beam is connected between its ends to the reinforcing flange *11* on the upper edge of the scraper blade, its rear end being pivotally connected at *21* to the draw bar *15*. The latter is held in desired position by a latch *31*, engaging one of the perforations in the curved bar *19*. A release of the latch by the driver's foot enables the shifting of the line of draft. As the beam *26* is always at right angles with the scraper blade, and as the draw bar always remains in the line of draft, its adjustment with respect to the latch bar changes the angle of the scraper blade with reference to the line of draft, and so sets the blade at right angles with that line or obliquely thereto, thus enabling the scraping of the road from either side to the center or on a level. The wheels *1* are journaled on crank axles *4*, which in turn are journaled on swinging brackets *3* pivoted at their forward ends to flanges on the scraper blade and at their rear ends to an alignment bar *5*; links *7* on the crank axle connect with the lower arms *8* of operating levers (not shown in the drawing), by which the scraper

Digitized by Google

blade may be raised or lowered throughout its length or either of the opposite ends of the blade may be raised. The specification calls for mechanism (not shown in the drawing above and not involved in the claims in issue) for putting the swinging brackets into different angular positions, whereby the wheels may be set, at the will of the operator, in either perpendicular or oblique positions. In the regular operation of the machine the drawbar is locked to the latch bar by the latch *31*, and the alignment bar *5* is locked to the beam *26* by stop collars *6* on the alignment bar, one on either side of the beam. The machine may be adjusted to any desired operative position by releasing the latch *31* and stop collars *6*. The claims in suit are printed in the margin.[1]

Whether defendant infringes depends upon the validity and scope of these claims.

Clemons was not a pioneer in the road grader art; nearly every important feature of his device was old when he entered the field. Mendenhall (to go no further) had disclosed a machine by which (as shown in reduced Fig. 2 of the patent drawings—a plan view)—

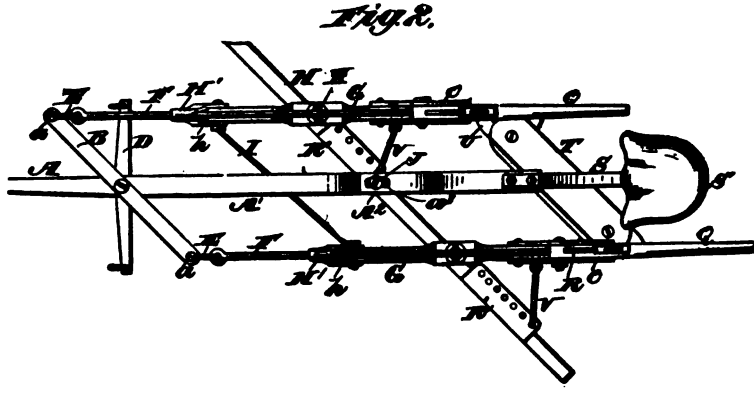

the scraper blade *H* is pivotally hung beneath longitudinal side beams *G*, carried by side rods *F*, the blade being retained in the desired position by rods *V* attached at one end to the side beams and at the other end to perforated metal plates R^1, secured to the top of the scraper blade, the drawbar *A* being also pivotally attached by a bracket to the rear side of the scraper blade. The wheels are carried on brackets depending from the side beams, to which the upper ends are rigidly attached,

[1] "2. In a road-grading machine the combination with a pair of wheels connected to a pair of swinging oscillating brackets pivotally attached to a blade with means for holding said swinging brackets where set substantially as described."

"17. In a road-grading machine, the combination with a scraper blade, of supporting wheels at the front and rear of said blade, crank axles connected to said blade with freedom for both lateral and vertical swinging movements, and to the rear portions of which crank axles, the said rear wheels are journaled, independent devices for vertically adjusting said crank axles and means holding the said crank axles for parallel lateral swinging movements, substantially as described."

Digitized by Google

their lower ends being pivoted upon brackets attached to the rear end of the scraper blade, which is raised or lowered by means of levers connected with the wheel brackets.

The differences between Clemons and Mendenhall, so far as here important, are these: The connection between Mendenhall's wheels, side beams and drawbar is such that the wheels must always move with the side beams, and thus with the drawbar; the turning of the drawbar automatically turns the wheels, which must thus always maintain practical parallelism with the drawbar. In Clemons, however, the arrangement is such that the wheel brackets move independently of both beam and bar, and the wheels need not thus be constantly held parallel with the line of draft; they are capable of being held in the desired position with respect to beam and drawbar through the alignment bar and the stop collars thereon. We agree with the Circuit Court of Appeals for the Eighth Circuit, that the Clemons patent shows invention over Mendenhall (Stockland v. Russell Co., 222 Fed. 906, 138 C. C. A. 386), but this invention we think resides only, so far as the claims here in issue are concerned, in the positive means for holding, where set, the independently moving and adjustable rear wheel brackets.

We are not impressed with plaintiff's contention that Mendenhall's disclosure is shown to be impracticable, nor by the suggestion that he had in mind only a road scraper, as distinguished from a road grader. His device was reasonably adapted for the latter purpose, though not as well adapted as that of Clemons. While Mendenhall showed no front wheel, there was nothing new in providing one.

Defendant's structure, as illustrated by the subjoined cut, may be thus compared with the device of the patent.

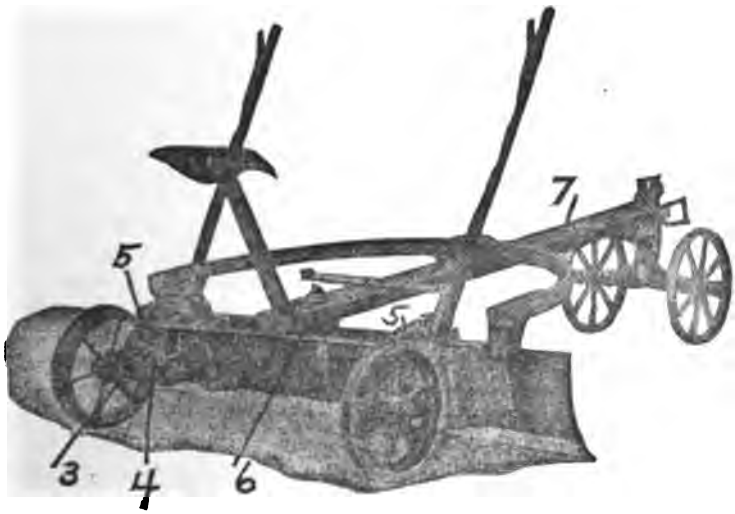

The scraper blade, as in the Clemons patent, is carried on a frame supported by rear and forward wheels; there is, however, no beam as distinguished from the drawbar; the unitary bar which takes the

Digitized by Google

place of plaintiff's drawbar and beam is pivotally connected near its rear end to the upper edge of the scraper blade; in front of this blade there is (as in Clemons) a circular latch bar adjustable on the drawbar, with perforations for connection therewith, and swinging brackets pivotally connected with the rear side of the scraper blade, to which brackets the levers which raise and lower the blade are pivotally connected, the short arms of the levers being rigidly connected with the axles of the rear wheels. These axles are unlike the crank axles of the patent, for they permit no lateral and independent movement with respect to the drawbar; *the wheels must always automatically move with the drawbar and parallel with the line of draft.* In the rear of the scraper blade an alignment bar, whose ends are pivotally connected with the respective wheel-supporting brackets, is permanently pivoted at the center upon the extreme rear end of the drawbar, which obviously is not at all times at right angles with the scraper blade. Unless in its pivoting upon the drawbar, *the alignment bar has nothing corresponding to the stop collars of the patent.*

We think it clear that the alignment bar *5*, the stop collars *6* and the locking pins *33* are the "means" specified in the claims in suit respectively for "holding said swinging brackets where set" and for "holding the said crank axles for parallel lateral swinging movements." The alignment bar alone is not the means. Defendant has not this holding element, unless, as plaintiff contends, the term "means" should be construed broadly enough to include the pivoting of the alignment bar directly upon the drawbar. But this we think not permissible, for the alignment bar *I* of Mendenhall was, in effect, so pivoted through its connection with the cross bar *B*, which was itself directly pivoted upon the drawbar, thus establishing a permanent connection between wheel brackets and drawbar. Indeed, in defendant's structure there is wholly lacking the idea of a mechanically adjustable connection between wheel brackets and drawbar, to meet changes of draft angle. *The adjustment is automatic, as in Mendenhall.* This difference is, we think, controlling.

The fact that the machine of the patent can be operated without the use of the stop collars on the alignment bar, so long as the angle of draft is unchanged, and is thus capable of a limited automatic movement, is not highly important; it has at all times the adjustable feature and positive holding means referred to, and such adjustment and holding means are necessarily used whenever the angle of draft is changed, and these holding means constitute an essential element of the claims in issue. Nor is it controlling, as respects the question of infringement of the claims in suit, that when the drawbar of the device of the patent is locked to its latch bar, the stop collars loose on the alignment bar and the scraper blade raised clear of the ground, a forward movement of the machine will cause the wheels to line up parallel with the drawbar. It is also immaterial, as respects the question of infringement, that in plaintiff's commercial machine, apparently manufactured as to some features under another patent than the one involved on this appeal, the stop collars are omitted and the alignment bar pivoted directly upon the drawbar.

We conclude that defendant does not infringe the claims in suit.

Digitized by Google

We find nothing in Stockland v. Russell Co., supra, opposed to this conclusion. The device there held to infringe had an alignment bar so constructed that in turning the machine one of the wheel brackets swings outwardly, independently of the drawbar.

The decree of the District Court is reversed, and the cause remanded, with directions to enter decree dismissing the bill.

(249 Fed. 61)

GENERAL ELECTRIC CO. v. COOPER HEWITT ELECTRIC CO.

(Circuit Court of Appeals, Sixth Circuit. January 8, 1918.)

No. 3036.

1. PATENTS ⟹109—VALIDITY—AMENDMENT OF APPLICATION.
The rule is that insertions by way of amendment in the description or drawing, or both, of a patent application, do not invalidate the patent, if they are only in amplification and explanation of what was already reasonably indicated to be within the invention, and this rule applies with special force where the insertion was required by the Patent Office.

2. PATENTS ⟹16—VALIDITY—IMPROVEMENT PATENTS.
A device may be at the same time an infringement upon the relatively generic claim of a prior patent and also be a patentable improvement thereon, and there is no inconsistency, even presumptive, between these conclusions.

3. PATENTS ⟹328—LAMP—EFFECT OF INTERFERENCE.
The Kuch patent, No. 1,090,992, for a mercury vapor lamp, *held* not invalidated by interference proceedings with Bastian in the Patent Office, in which priority was awarded to Bastian as to certain claims then included in Kuch's application, but not as to the claims finally allowed.

4. PATENTS ⟹328—INVENTION—INFRINGEMENT.
The patent further *held* to disclose an improvement which involved patentable invention; also *held* infringed.

5. PATENTS ⟹167(1)—VALIDITY AND INVENTION—IMPROVEMENT PATENTS.
When a supposed invention is considered with reference to a prior patent, to determine whether there was inventive advance, the claims of that prior patent are wholly immaterial, unless in some possible instances where the claims might interpret an obscurity. The question is whether there has been inventive advance upon the structure disclosed by the specification and drawings, and if the claims seem to reveal the later form, when the specification and drawings do not, it must be because of the generic language of the claims, interpreted in the light of the later device.

Appeal from the District Court of the United States for the Eastern Division of the Northern District of Ohio; John H. Clarke, Judge.

Suit in equity by the General Electric Company against the Cooper Hewitt Electric Company. Decree for defendant, and complainant appeals. Reversed.

Squire, Sanders & Dempsey, of Cleveland, Ohio, and Pennie, Davis & Marvin, of New York City (W. B. Morton and Wm. H. Davis, both of New York City, of counsel), for appellant.

Parker W. Page and Thomas B. Kerr, both of New York City, for appellee.

Before KNAPPEN, MACK, and DENISON, Circuit Judges.

⟹For other cases see same topic & KEY-NUMBER in all Key-Numbered Digests & Indexes

Digitized by Google

DENISON, Circuit Judge. This is the ordinary suit for infringement, based upon patent No. 1,090,992, issued March 24, 1914, to Kuch for an improved mercury vapor lamp. Appellant acquired title to the patent and was the plaintiff below. The bill was dismissed because the patent was thought to be invalid, and the plaintiff appeals.

The conclusion of invalidity is rested upon two grounds: First, that new matter was introduced into the application and was not supported by new oath; and, second, that Kuch was anticipated by Bastian, and that this priority had been adjudicated in an interference between them. A due understanding of the questions thus presented requires a brief explanation of the invention. Lamps of this type consist essentially of a sealed glass tube, more or less exhausted, having a mercury electrode at each end. When the tube is filled with the mercury vapor and the electric current passed through, the vapor becomes luminous or incandescent. One of the recognized difficulties is that, since greater heat develops at the anode than at the cathode, there is at the anode a greater vaporization, and the mercury is distilled over and accumulates at the cathode, so as to destroy the proper balance. This difficulty had been met by devices or constructions which caused or permitted the excess mercury at the cathode to run back occasionally along the tube to the anode; but this remedy brought new operating difficulties in the high pressure lamps. Kuch's object was to find a better way to preserve an automatic balance between the two electrodes. He took that style of lamp which had a horizontal tube carrying the mercury at each end in a depending enlargement or bulb, and he accomplished a first or general automatic balance by directly attacking the vaporization at the anode. His remedy for the excess was to make the anode bulb larger than the cathode bulb. It followed that the outer surface of the former bulb, which would radiate heat, would be larger, and would therefore by radiation subtract heat from that generated inside the bulb, and so diminish what may be called the net heat of the mercury, and the comparative resulting anode vaporization. He knew that the effect of a given current upon these electrodes and under given conditions could be computed, and his inventive thought was that, if the radiating surfaces of the two bulbs were proportioned to the amount of the heat to be generated in each, there would be corresponding radiation and the proper vaporization balance would be maintained.[1] He thus brought about a rough and general equalization by attacking the cause of inequality; but changes of external temperature or other conditions would prevent this preliminary regulation from entirely and always stopping the accumulation of excessive mercury at the cathode, and so Kuch provided a further and final automatic regulation. He knew that there occurred at the cathode a phenomenon called the "cathodic aigret." This was an agitation suggestive of boiling, and it extended a certain depth from the surface of the mercury in the cathode. Obviously, the bulb surface adjacent to the mercury thus agitated would radiate heat much

[1] Theories of heat transmission to the mass of mercury in the bulb are also involved, but do not need statement.

Digitized by Google

more actively than the remaining and lower part of the bulb surface. Kuch utilized this effect of this phenomenon by interposing, between his horizontal illuminating tube and his depending cathode bulb, an intermediate upwardly-inclined tube of much less diameter than the illuminating tube. A small excess accumulation of mercury in this intermediate tube would very considerably raise the lowest point of this aigret agitation and so diminish radiation, increase the net heat, and promote vaporization. A slight drop in the mercury in this tube would have the converse magnified effects; and the mercury level would, automatically, maintain itself substantially constant. We here reproduce Fig. 1 of the Kuch patent as originally filed and as amended. Claims 2 and 3 are given in the margin.[2] Claims 1 and 4, also sued upon, do not require separate consideration.

[1] The original drawing did not show any anode bulb or passage thereto from the illuminating tube, nor did the specification contain any particular description of either. During the progress of the ap-

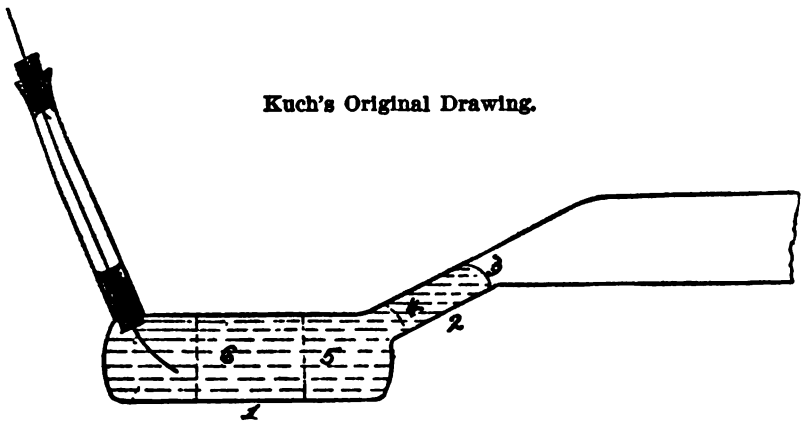

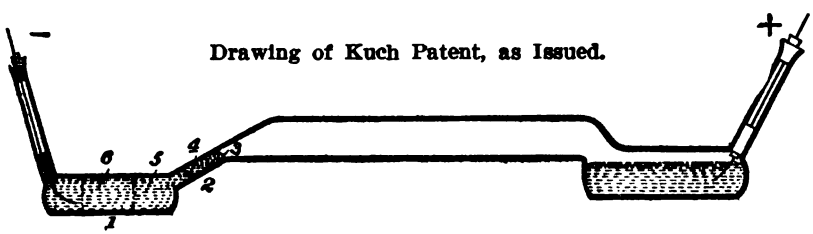

[2] "Claim 2. The herein described gas or vapor electric lamp comprising a tube having electrode chambers at its ends, the cathode chamber being connected with the tube by a passage smaller than that connecting the tube and anode chamber, a body of mercury in the cathode chamber and partly filling the passage connecting said chamber with the body of the tube, and a body of mercury in the anode compartment.

"Claim 3. A vapor electric device comprising an anode bulb partly filled with mercury, a main illuminating tube communicating with said anode chamber and a tube of lesser diameter than said illuminating tube connecting the latter with the cathode chamber."

Digitized by Google

plication, an amended drawing was filed as above, and the specification was made to say, in so many words, that the anode bulb was larger than the cathode, and that the passage leading from the illuminating tube to the anode was larger than the passage or intermediate tube leading to the cathode bulb. The claims, as issued, are made to depend in part upon these things not originally specified. Hence it is plausibly argued that the insertion was of new matter and was vital to the invention as patented; and thereupon it is said that the patent is void. Railroad v. Sayles, 97 U. S. 554, 563, 24 L. Ed. 1053; Railroad v. Consolidated Co. (C. C. A. 6) 67 Fed. 121, 129, 14 C. C. A. 232. This view overlooks the substance of the invention, as disclosed in the original specification and drawing. The rule is that insertions by way of amendment in the description or drawing, or both, do not hurt the patent, if the insertions are only in amplification and explanation of what was already reasonably indicated to be within the invention for which protection was sought—"something that might be fairly deduced from the original application." Hobbs v. Beach, 180 U. S. 383, 395, 21 Sup. Ct. 409, 45 L. Ed. 586; Cleveland Co. v. Detroit Co. (C. C. A. 6) 131 Fed. 853, 857, 68 C. C. A. 233; Proudfit Co. v. Kalamazoo Co. (C. C. A. 6) 230 Fed. 120, 123, 144 C. C. A. 418; Cosper v. Gold, 36 App. D. C. 302. When we seek to apply this rule in this case, we first observe that the alleged new matter was not only permitted by the Patent Office, but was required, because an element claimed was not shown or sufficiently described. The Patent Office has a strict rule on this subject. It fully recognizes that new matter must not be permitted, and it is constantly engaged in defining what is and what is not new matter. The application of the rule must, of necessity, be more or less arbitrary, and the presumption of correctness which attends Patent Office rulings must apply with especial force to this class of ruling; and most peculiarly is that true when the applicant has only complied with the demands which the Patent Office made.

It is clear to us that Kuch's original application did cover and include these features sufficiently to justify the later fuller description and drawing. After reciting that the evolution of heat at the anode was greater than at the cathode, so that the vaporization at the latter was less, he said that the first object of his invention was to so determine the sizes of the two electrode vessels that they should be in the same proportion as the heats developed in them, and that the second object was to connect the cathode with the illuminating tube by means of a narrow intermediate tube. He also says:

"It is easy to so proportion the positive and negative electrode vessels that the proportion of the heats given off at both electrodes is approximately the same as the proportion of heats developed at both electrodes."

He also says:

"The size of the cathode vessel in proportion to that of the anode vessel is from the beginning so determined that" the desired results are effected.

His first claim was,

"In a gas or vapor electric lamp the combination with an illuminating tube of an anode vessel at the one end of said illuminating tube, a cathode vessel, a

Digitized by Google

narrow intermediate tube between the other end of said illuminating tube and said cathode vessel, and a metal liquid doing work in said anode vessel, said cathode vessel and said narrow intermediate tube."

The second claim specified that the sizes of the anode and the cathode vessels should be in proportion to the developed heats. Later claims had specific reference to the function of the narrow intermediate tube in controlling the cathode heat through the aigret action. Thus we find repeated and direct reference to the fact that the anode bulb is to be larger than the cathode bulb, and in the very proportion which has always been specified in the claims. Since Kuch did not illustrate this anode vessel, he must be deemed to have referred to the well-known form in common use. Cosper v. Gold, supra. In this form, the illuminating tube entered the anode chamber without any constriction, but by an opening which was the full cross-section area of the illuminating tube. It follows that when Kuch specified that at the cathode end of the illuminating tube he had a narrower tube entering the cathode chamber, he naturally implied that this entrance was smaller than the entrance to the anode chamber at the other end of the illuminating tube.[3] It surely is not the insertion of new matter to put into express words a structural characteristic already fairly implied. The attack upon the patent on this ground must fail. The situation is closely analogous to that in Abercrombie Co. v. Baldwin, 245 U. S. 198, 38 Sup. Ct. 104, 62 L. Ed. 240, decided by the Supreme Court December 10, 1917.

[2, 3] After most of Kuch's claims, about 20 in number, were allowed, the Office suggested to Bastian 16 of these claims. Bastian adopted them, and an interference was declared. Since both applicants were foreigners, and Bastian's filing date was earlier, the Office awarded him priority. So far as the inventions pertained to a proportioning of the anode and cathode bulbs, this award of priority is the end of the matter; but at the time of the declaration of interference Kuch's application contained claims identical with 1 and 2 in his issued patent, and these claims were not included in the interference. Like claims 3 and 4, added after the interference, they were characterized and limited by the provision that there should be between the illuminating tube and the cathode tube an "intermediate tube" or a "contracted passage" of less diameter than the main part or other end of the illuminating tube. Count 11 of the interference, which had been one of Kuch's claims and which became claim 11 of the Bastian patent, was:

"In a vapor lamp, the combination with the horizontal illuminating tube of an anode, a cathode chamber, a narrow upwardly inclined intermediate tube connecting the illuminating tube and the cathode chamber, an active fluid in the cathode chamber and partly filling the intermediate tube."

Since this count plainly reads upon Kuch's form, and priority was awarded to Bastian, the court took the view that the invalidity of Kuch's patent necessarily followed, and assumed that a decree accordingly was in substantial conformity to the Patent Office decision.

[3] When he made his new drawing, he showed a passage to the anode which may be slightly constricted, but his claims do not involve this feature.

Digitized by Google

We think this view does not give due force to the rule that a device may be at the same time an infringement upon the relatively generic claim of a prior patent and also be a patentable improvement thereon, and that there is no inconsistency—even presumptive—between these conclusions. Herman v. Youngstown (C. C. A. 6) 191 Fed. 579, 584, 112 C. C. A. 185). The intermediate tube of smaller diameter than the illuminating tube, or, in other words, the passage to the cathode chamber constructed so as to be smaller than the illuminating tube, was a feature certainly not shown by Bastian, and its addition to or substitution in Bastian's structure might well be a patentable improvement upon anything which Bastian had invented. In careful observance of this distinction and purported compliance therewith, the Patent Office reserved out of the declaration of interference two claims which were limited to this additional feature, and later issued to Kuch the patent in suit, based on these and similar claims. To hold these claims invalid on account of the result of the interference is not to affirm but is to reverse the Patent Office conclusions on the subject; and the claims cannot be held invalid for that reason.

[4] This leaves only the question whether this so-called improvement, when considered with Bastian put in the prior art (where, for the fourth defense, he must be placed—Lemley v. Dobson [C. C. A. 6] 243 Fed. 391, 395, 156 C. C. A. 171), involved patentable invention. This is the controlling question in the case. It is not free from doubt, and very likely the decree below was intended to rest substantially upon a negative answer thereto.

Here, again, the patentee has the benefit, in rather unusual degree, of that presumption of correctness which attaches to the Patent Office rulings. After the interference was finished, the examiner rejected two of the remaining claims of Kuch upon the ground that they were identical with the interference issues, but allowed two others of those reserved from the interference (present 1 and 2). He also rejected, on the same ground, two new claims tendered (present 3 and 4). Kuch finally conceded that the interference adjudication covered the first two just mentioned, but argued that it did not reach 3 and 4, for the same reason that 1 and 2 were not included. To these arguments the Patent Office yielded. Its action in this respect was therefore most deliberate and considered, and especial deference is given to such rulings. Canda v. Michigan Co. (C. C. A. 6) 124 Fed. 486, 493, 61 C. C. A. 194.

[5] Plainly, when we consider a supposed invention with reference to a prior patent, to determine whether there was inventive advance, the claims of that prior patent are wholly immaterial—unless in some possible instances where the claims might interpret an obscurity. We must look, rather, to the structure disclosed by the specification and drawings, and the question is whether there has been any inventive advance upon that structure. If the claims seem to reveal the later form, when the specification and drawings do not, it must be because of the generic language of the claims, interpreted by our knowledge of the later device. We therefore cannot depend upon the language of Bastian's claim 11 (and similar claims, 10 and 12) in which alone

Digitized by Google

there was any reference to a "narrow intermediate tube" as distinguished from the illuminating tube and the cathode chamber, and we refer to the specification and drawings to see whether Bastian has the equivalent of the "tube of lesser diameter than the illuminating tube" upon the presence of which the Kuch patent depends. Bastian's specification does not mention any "narrow" tube or any "intermediate" tube. Since Bastian's claim 11 declares that this "narrow intermediate tube" is found in connection with the horizontal illuminating tube, we may well look for it in his Fig. 1, showing his horizontal form and here reproduced.

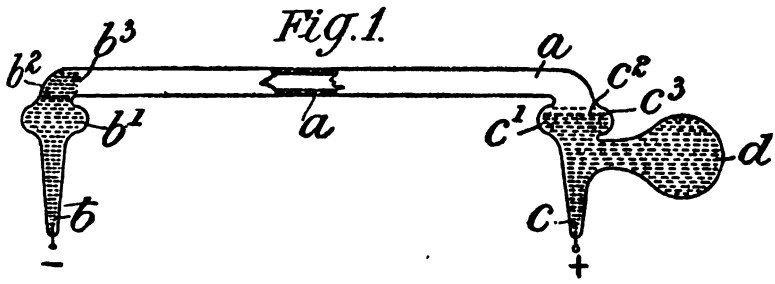

Yielding to the Patent Office conclusion that Bastian could make this claim on his disclosure, it follows that this element must be there somewhere. It cannot be a part of the cathode bulb. It therefore must be that end of the illuminating tube which turns downwardly into the cathode bulb. It is rather an awkward conception that, of a unitary tube of constant diameter all of which seems to be the illuminating tube, part is iluminating tube and part is a "narrow intermediate tube" between the illuminating tube and the cathode; but there is no other solution. Bastian's "narrow tube" is therefore an extension of the illuminating tube, and of precisely the same diameter, and is "narrow" only with reference to the greater diameter of part of the cathode bulb, while Kuch's tube is also narrow with reference to the illuminating tube. Is Kuch's form only such a variation as any one skilled in the art might naturally make? Defendant insists that the vital relationship is between the size of the intermediate tube and the size of the cathode bulb, and that, since it was common practice to increase the size of the illuminating tube proportionately to the increase in the current to be used, there was no invention in maintaining that part of Bastian's tube which served as the cathode extension at the small size shown by Bastian, and then expanding the remainder of the tube into any size which the current required.

We are not convinced that we should accept this conclusion. In the first place, Bastian certainly contemplated nothing of the kind. Not only is it evident that his entire illuminating tube must be of such very small diameter that superficial tension will prevent the flow of the mercury along the horizontal part, but in another patent, issued upon a divisional application, he expressly claimed this feature. Next, we observe that in Kuch, the mercury arc initially fills the main illumi-

Digitized by Google

nating tube and usually extends part of the length of the intermediate tube. So far as shown by the records in this and in the companion case (No. 3028) relating to the same art (249 Fed. 69, 161 C. C. A. 129), there had never been a lamp with mercury electrodes in which the arc or its containing tube was constricted at or toward the cathode; on the contrary, the area of the active cathode surface had always been at least as great as the cross-section area of the arc tube; and we cannot now say that an innovation in this respect presented no new problems as to radiation, amperage or other elements. If the arc has become limited to a central "string," then the constriction would be of the space between the arc and the tube walls, and there is no presumption that this would be immaterial.[4] The Bastian device was inoperative, except with a small amperage. That its beneficial effects could be retained, and that it could be made to operate with a high amperage, by expanding part of the tube and leaving the remainder untouched, seems now entirely obvious to the defendant's expert; but we think we have no right to say that this was ordinary skill in 1906. Such a change would involve, not only expanding part of the tube, but (probably) changes in the quantity of mercury to be vaporized and readjustment of the anode and cathode sizes—in fact, every factor involved would be disturbed and subject to recomputation if not to experimental research.

When to these considerations we add the fact that defendant, owner of the Bastian patent, has abandoned his specific form and adopted Kuch's, thus paying the "tribute of imitation" (Diamond Co. v. Consolidated Co., 220 U. S. 428, 441, 31 Sup. Ct. 444, 55 L. Ed. 527), we conclude that the presumption of validity is not sufficiently overcome, and that there must be the usual decree for injunction and accounting.

[4] We do not overlook Fig. 2 of Hewitt patent No. 682,690 (using one mercury electrode). The inserted guide or collar which produced restriction was for a different purpose, and was of opaque and nonheat-conducting material. It is not more than a suggestion of one element of Kuch's combination. If it were more, it would anticipate Bastian's claim 11.

Digitized by Google

(249 Fed. 69)

GENERAL ELECTRIC CO. v. COOPER HEWITT ELECTRIC CO.

(Circuit Court of Appeals, Sixth Circuit. January 8, 1918.)

No. 3028.

PATENTS ⟹328—INVENTION—METHOD OF OPERATING VAPOR LAMPS.

The Kuch patent, No. 883,725, for a method of operating mercury vapor lamps, claim 1, *held* void for lack of invention, in that the process or method of the patent was previously known and used for some purposes where the cost was not considered, and that the discovery of the patentee was only of its commercial utility when used under certain conditions.

Appeal from the District Court of the United States for the Eastern Division of the Northern District of Ohio; John H. Clarke, Judge.

Suit in equity by the General Electric Company against the Cooper Hewitt Electric Company. Decree for defendant, and complainant appeals. Affirmed.

Squire, Sanders & Dempsey, of Cleveland, Ohio, and Pennie, Davis & Marvin, of New York City (W. B. Morton and Wm. H. Davis, both of New York City, of counsel), for appellant.

Thos. B. Kerr and Parker W. Page, both of New York City, for appellee.

Before KNAPPEN, MACK, and DENISON, Circuit Judges.

DENISON, Circuit Judge. The appellant, as owner of the Kuch patent, No. 883,725, issued April 7, 1908, for a method of operating vapor lamps, brought this action in the court below against the appellee, for infringement of claim 1. The bill was dismissed because this claim was held invalid.

We think the judgment below may rightly be sustained upon a comparatively simple ground, which makes unnecessary any extended consideration of vapor lamps or of the operative principles involved. The mercury arc lamp is the most familiar type of the class to which the patent refers, and its general theory is recited in our opinion in the companion case (No. 3036). 249 Fed. 61, 161 C. C. A. 121. The electric energy passed through such a lamp may be measured in terms of volts per centimeter of the lamp's length, the consumption of current in terms of watts, and the light-giving result in terms of candle power. Efficiency was, therefore, a matter of candle power per watt or watts per candle power. In the former method of statement, the extreme high point in the curve plotted upon a chart would represent the highest efficiency—that is, the most light in proportion to the electric energy used. It was well known that, as the voltage was increased, the efficiency increased until a certain point was reached, and thereafter further increase diminished the efficiency. Selecting the conditions of the alleged infringing lamp in order to get concrete figures, it was found that about 2 volts per centimeter gave the best result, and indicated the high point in the curve of candle power results, while 2¼, 2½, 2¾, and 3 volts per centimeter gave progressively diminishing results. We assume it to be the fact, as claimed in be-

⟹For other cases see same topic & KEY-NUMBER in all Key-Numbered Digests & Indexes

Digitized by Google

half of the patent, that the experts in the art had accepted this as the fixed law of the operation of the lamp, and had therefore abandoned any thought of carrying the pressure higher in commercial lamps where economy of operation was important. Kuch discovered that, if the voltage was increased considerably beyond the supposed end of the economy road, contrary results followed, and, with very high pressures, the efficiency curve could be carried well above the formerly understood high point, thus achieving a second and greater maximum of efficiency. His discovery is broadly formulated in his patent by the first claim which reads:

"The method of working gas or vapor electric lamps having mercury electrodes to increase thir efficiency, which consists in applying to said electrodes an electric potential greater for unit length of column of light than that corresponding to the minimum point of its curve of efficiency, substantially as described."

Confessedly, Kuch devised no new apparatus. He only employed, in an existing apparatus, a potential greater than what had been supposed to be the limit of efficient use. Whether such a discovery is a patentable invention under any circumstances—one of the questions considered below—we pass by. For the purposes of this opinion, we assume that, if he had been the first person who intelligently and purposely persisted in such use of such potential, or to disclose that it could be used with some useful result, the discovery would have been a patentable process or method. See Bethlehem Co. v. Niles Co. (C. C.) 166 Fed. 880.

However, we cannot give him credit for this priority. High voltage develops great heat, and great heat melts glass. This fact, pehaps as much as the discouraging look of the efficiency curve, had prevented the use of very great pressures; but at least two or three years before Kuch's discovery mercury arc tubes had been made of fused quartz, which would endure extremely high temperatures. The physical obstacle to the increase of voltage in these lamps had therefore disappeared. We think the only reasonable interpretation of the record, giving Kuch the benefit of some doubts, is that, at the date of his discovery, all attempts to use, for commercial lighting, a voltage per centimeter of more than the equivalent of 3 in a tube of the diameter used in the infringing lamp had been abandoned, but that much higher voltages were in use in quartz tube lamps for laboratory experimental and scientific use. Even if it ought not to be assumed that these voltages above the formerly supposed "critical point" of the particular lamp were actually used from time to time as there was scientific or experimental need for lights of greater intensity, certain it is that from the time of Cooper Hewitt's first disclosure it was a commonly understood law of operation that the total light produced increased with the density of the vapor; that the necessary voltage per centimeter, with a given diameter of tube, increased at the same time, or, put the other way around, that an increased voltage produced greater density and more intense light. No one had ever supposed that there was any maximum limit to the light intensity thus to be obtained, short of atmospheric pressure or the destruction of the tube. It was, therefore, common knowledge, after the quartz tubes were in use, that lights

Digitized by Google

of highest intensity could be produced by the process of the patent, if anybody wanted such a light and did not care what it cost. It is quite immaterial whether we say that the patented process had been in use to accomplish a useful result by those who did not know that they were thereby accomplishing another useful result, or say that it was well known in the art that the use of the patented process would produce a useful result, although nobody had used it to produce that result because every one thought it would cost too much to do so. From either point of view, the sum of the matter is that Kuch only discovered a previously unknown law of operation involved in a known method; he discovered that light, produced by known lamps, operated by a known method, had not only the known quality of intensity, but also the previously unknown quality of cheapness. In still other words, while he was the first to make completely intelligent use of this high potential, he was not the first to use it—or, at least, to disclose that it could be used—for one useful and understood purpose. We are clear that such a discovery does not constitute a patentable invention—indeed, when the matter is thus stated, we do not understand counsel to contend otherwise. O'Reilly v. Morse, 15 How. 62, 14 L. Ed. 601; Burr v. Duryee, 1 Wall. (68 U. S.) 531, 17 L. Ed. 650; Wall v. Leck (C. C. A. 9) 66 Fed. 552, 13 C. C. A. 630; Carmichael v. Jackson (C. C. A. 7) 192 Fed. 937, 113 C. C. A. 327. In each one of the cases specially relied upon by plaintiff[1] it appears that the process or method was previously unknown, and not merely that its commercial utility was unknown.

Even if we accept plaintiff's theory that the low pressure lamp and the high pressure lamp should be considered as separate things, and not as a unit embodying the progressive pressure, yet plaintiff is no better off; they are certainly very analogous to each other. In the low pressure lamps, it was the common practice to increase the voltage until tests indicated that the high efficiency point for that particular lamp had been reached; and this is what Kuch did with the high pressure lamp.

The decree below proceeded in part upon the theory that the infringing lamp—which plaintiff must consider the patented lamp—had its minimum point of efficiency at about 3 volts per centimeter, but in operation used a potential increased to about 8 volts per centimeter, thus indicating that the use of the latter voltage would infringe or would anticipate. It was conceded that earlier lamps had been operated at a pressure of 8 or more volts per centimeter, and thus, it was thought the patent's invalidity was shown. Plaintiff now says that there is no necessary relationship between volts per centimeter and the efficiency curve, but that the diameter of the tube, or amperage, must be taken into account, and that, when the figures are thus rectified, it will be found that (e. g.) the voltage per centimeter of 8, used on the Bastian early lamp, was equivalent to a voltage per centimeter of 2

[1] Nielson v. Harford, Webster's Patent Cas. 275; Badische Co. v. Kalle (C. C.) 94 Fed. 163; American Co. v. Howland Co., 80 Fed. 395, 25 C. C. A. 500; Byerley v. Sun Co., 184 Fed. 455, 106 C. C. A. 537; Carnegie Co. v. Cambria Co., 185 U. S. 403, 22 Sup. Ct. 698, 46 L. Ed. 968.

Digitized by Google

on the infringing lamp, and hence the Bastian voltage of 8 was before his lamp touched its minimum efficiency, just as the defendant's voltage of 2 is above or before the minimum efficiency point of defendant's lamp. We are inclined to the view that plaintiff is right in this position, and that earlier lamps cannot be pronounced anticipations of Kuch's actual discovery merely because they were operated at voltages per centimeter higher than the defendant now uses; but the misapprehension now charged against the court below seems to have been shared by the patentee. Plaintiff now says, in effect, that the efficiency curve is determined by the watts input instead of by the voltage per centimeter; but the patent itself suggests no measure save the latter, and the second claim (not in suit) is drawn in terms of the latter measure. Plaintiff, in effect, confesses that the second claim fails to formulate the invention, unless the claim happens to be applied to a lamp of the same diameter as the one which the patentee was using. We see, therefore, that plaintiff's attack upon the decree below in this respect, if the attack is in truth well founded, develops a very considerable defect in the patent specification. Nowhere does the patent indicate that the amperage, or the diameter of the tube, is an essential factor in determining the existence or use of the patented invention. Whether this incompleteness of explanation might be fatal, or whether the profession, to which it was addressed, ought to be thought sufficiently skilled to supply the deficiency, we need not consider.

There is another difficulty in plaintiff's way: The claim in suit includes any use of a voltage per centimeter greater that that "corresponding to the minimum point" of that particular lamp's curve of efficiency. Taking the same concrete instance which we have used, the defendant's infringing lamp, the plotted curve shows that an increase of the voltage from 3 per centimeter, which is the minimum point of the curve, up to about 6 per centimeter, gives no efficiency above the first maximum which had been reached with about 2 volts per centimeter. We find, therefore, a range of increase within the terms of the claim which seemingly produced no new result whatever along those lines of efficiency in which the invention consisted. If the claim had called for using a voltage greater than that corresponding to the minimum point of efficiency, and continuing that increase until the lamp passed its former known maximum of efficiency, it would have defined the invention which is now claimed to be new and useful. As the claim now reads, it is broader than this definition will justify. We do not overlook some considerations tending to weaken the conclusion of invalidity claimed to result on this ground; but at least there is, in this matter, a considerable difficulty to be overcome by plaintiff before the less technical questions can be reached.

The decree below is affirmed.

Digitized by Google

(249 Fed. 81)

RALPH v. COLE et al. (two cases).

(Circuit Court of Appeals, Ninth Circuit. March 8, 1918. Rehearing Denied May 13, 1918.)

Nos. 2952, 2953.

MINES AND MINERALS ⟹38(23)—ACTIONS—SUBMISSION OF ISSUE OF ADVERSE POSSESSION.

In actions begun in the state court, pursuant to Rev. St. §§ 2325, 2326 (Comp. St. 1916, §§ 4622, 4623), to determine contests over Nevada mining claims, which were removed to the federal court and consolidated, the refusal of instructions, requested by defendant, submitting the issue of adverse possession, which was raised by the evidence, was prejudicial error; limitations being a defense under the Nevada statutes applicable to actions to recover mining claims.

Gilbert, Circuit Judge, dissenting.

Appeals from and in Error to the District Court of the United States for the District of Nevada; Edward S. Farrington, Judge.

Action by George A. Cole and others against Joseph Ralph, begun in the state court and removed to the federal court, and consolidated with a second action by the same plaintiffs against the same defendant, also begun in the state court and removed. There were judgments for plaintiffs, and defendant appeals and brings error. Appeals dismissed, and in each case judgment reversed and cause remanded.

The basis of these actions were contests which arose in the United States land office at Elko, Nev., under the provisions of sections 2325 and 2326 of the Revised Statutes (Comp. St. 1916, §§ 4622, 4623), concerning certain mining ground situated in the Battle Mountain mining district in Lander county, of that state. In the case first above entitled and here numbered 2952, the present plaintiff in error filed an application in that land office for a patent to various specifically described lode claims alleged to have been theretofore located by his predecessors in interest, and among them one called and known as Salt Lake No. 3 lode, against which application, in so far as concerned the last-mentioned claim, one or more of the present defendants in error and the predecessors in interest of the others filed in the land office a protest and adverse claim, basing their alleged rights upon a placer claim to substantially the same ground, called Guy Davis placer, located September 6, 1913—years after the location under which the plaintiff in error claims.

Within the time prescribed by section 2326 of the Revised Statutes one or more of the present defendants in error and the predecessors in interest of the others, commenced in the district court of the Third judicial district of the state of Nevada, in and for the county of Lander, the first of the present actions against the present plaintiff in error, alleging in substance as follows:

(1) That ever since the ——— day of September, 1913, plaintiffs and their predecessors in interest were the owners of and in the actual possession and occupancy of the Guy Davis placer mining claim, 1,500 feet in length by 600 feet in width, said claim being situated in the Battle Mountain mining district, county of Lander, state of Nevada, and plaintiffs and their predecessors in interest ever since have been and now are the owners of and entitled to the possession of said mining claim.

(2) That plaintiffs are the owners of and entitled to the possession of

⟹For other cases see same topic & KEY-NUMBER in all Key-Numbered Digests & Indexes

Digitized by Google

said Guy Davis placer mining claim by virtue of a full compliance with the local laws, rules, and customs of miners in said mining district, the laws of the United States, and the state of Nevada relating to mining claims, and by actual prior possession, location, and discovery thereof by these plaintiffs, their grantors, and predecessors in interest.

(3) That on or about August 1, 1914, the defendant wrongfully and without right entered certain portions of said Guy Davis placer mining claim, and on or about said day said defendant filed in the United States land office at Elko, Nev., diagram and field notes of the Salt Lake No. 3 lode, and also the John John and other lodes, and filed therewith an application for patent of the United States for said Salt Lake No. 3 lode, said application being designated as "M. A. No. 01544, Min. Sur. No. 4175," and caused the register of said land office to give notice of said application for patent by publication, as required by law, in the Battle Mountain Scout, a newspaper published in said mining district at Battle Mountain, Nev., the first publication thereof being made on the 1st day of August, 1914, and in said application said defendant did apply for patent of all of said Salt Lake No. 3 lode, and more particularly described as follows (giving specific description); that by said application for patent, and by said wrongful entry aforesaid, defendant wrongfully and without right entered said Guy Davis placer, and practically all of that part of the Guy Davis placer which is intersected by the exterior lines of said "Sur. No. 4175," as shown by plat marked "Exhibit B," filed on the 24th day of September, 1914, in the land office of the United States at Elko, Nev., with the adverse claim of the present defendants in error against an entry of said "Min. Sur. Co. 4175, Mineral Application No. 01544" for patent, said ground so intersected being described as follows (giving specific description), containing 19.86 acres.

(4) That said adverse claim was filed in the said land office within the period of 60 days of notice of said application for patent to said Salt Lake No. 3 lode, and that the present action was commenced before the expiration of 30 days after the filing of the said adverse claim, and is brought in support thereof.

The prayer of the complaint is for judgment against the defendant to the action, for the recovery of the possession of said Guy Davis placer claim, and for a decree that the plaintiffs are the owners, in the possession, and entitled to the possession, of said placer claim, and for the sum of $500 alleged to have been expended in the preparation of said adverse claim, and for the sum of $500 as damages.

In his answer the defendant to the action denies that the plaintiffs, or either of them, or that their predecessors in interest, are or ever were the owners of, or in actual possession of, or entitled to the possession of, any portion of the "so-called" Guy Davis placer mining claim, or to any of the ground embraced within its side lines, by virtue of a full compliance with local laws, rules, or customs of miners in said mining district, or the laws of the United States or the laws of Nevada, relating to mining claims, or by actual prior possession, location, or discovery by plaintiffs, their grantors, or predecessors in interest, or any one, or at all.

The defendant further denies that on the 1st day of August, 1914, or at any other time, or at all, he or his predecessors in interest, or any one on his behalf, wrongfully and without right entered certain portions of said "so-called" Guy Davis placer mining claim, but admitted that on said date he filed in the United States land office at Elko, Nev., an application for patent to the said Salt Lake No. 3 lode claim, together with a like application for patents to the John John and other lodes, and with a diagram and notes of the surveys, and caused the register of the said land office to give the required notice of such applications, and admitted that the first publication thereof was made on the 1st day of August, 1914, and admitted that such application covered all of the ground embraced within the side lines of said Salt Lake No. 3 lode as alleged in the complaint, but denied that any of the said acts were without right, but, on the contrary, alleged that all of them were rightful and in accordance with law.

Digitized by Google

The defendant further denies that by his said application for patent, or by said entry, or in any other way, he wrongfully or without right entered upon any of the portion of the "so-called" Guy Davis placer, as set forth in the complaint, but, on the contrary, alleges that he is and at all the times mentioned was the owner of and entitled to the possession of all of the ground covered by the adverse claim of the plaintiffs. And by his answer the defendant as a further defense alleges:

(1) That the plaintiffs and each of them are and were at all the times mentioned in the complaint residents and citizens of the state of Nevada, and the defendant a resident and citizen of the state of Utah, and over the age of 21 years.

(2) That the amount involved in the action is over $3,000, exclusive of interest and costs.

(3) That on or about February 2, 1897, the grantors of the defendant, then being citizens of the United States and over the age of 21 years, were, and ever since that date the defendant and his said grantors have been, the owners, in the actual possession of, and entitled to the possession of, the said Salt Lake No. 3 lode mining claim.

(4) That he has and claims the legal right to occupy and possess said Salt Lake No. 3 lode mining claim, by virtue of a full compliance with the local laws, rules, and customs of miners in said mining district, the laws of the United States, and of said state of Nevada, by pre-emption, purchase, and subsequent transfer, and by actual prior possession as a lode mining claim located upon the public domain of the United States.

(5) That on or about February 2, 1897, the grantors and predecessors in interest of the defendant, being then citizens of the United States, entered upon its then unappropriated public domain and located the Salt Lake No. 3 lode mining claim, by then and there marking the boundaries thereof as required by law, and ever since said date the defendant and his grantors were, until September 5, 1913, in the quiet and undisputed possession of said lode mining claim, and during all of said time, and for more than 16 years, the defendant and his grantors and predecessors in interest were in the open, notorious, adverse, and undisputed possession of said mining claim, holding, working, and living thereon; that on or about September 6, 1913, while said claim was so being held, owned, occupied, and possessed by the defendant, his grantors, and predecessors, and with full knowledge, the plaintiffs and their grantors wrongfully and without authority entered upon said lode mining claim, without the knowledge or consent of the said defendant or his grantors, and attempted to locate upon the ground embraced within the said Salt Lake No. 3 lode the Guy Davis placer claim; that by reason of the premises alleged the defendant has become and is now the owner and holder of the said ground and the whole thereof, and that the said attempted location of the plaintiffs and their grantors was and is wholly void and of no effect.

The prayer of the answer is that the plaintiffs take nothing upon their complaint, that judgment be given defendant for the possession of said Salt Lake No. 3 lode mining claim, and for costs of suit.

The reply of the plaintiffs put in issue the affirmative allegations of the answer.

In the second of the suits above entitled, being No. 2953, the pleadings are in all respects similar, except as to the property in controversy. In that action the patents applied for by the defendant to the action were for two lode claims, named, respectively, Midas and Evening Star, across the surface of which the plaintiffs and their predecessors in interest located a placer mining claim called Homestake placer, based upon which claim they filed in the land office a protest against the application of the defendant to the action and asserted their adverse claim to such placer, and in pursuance of which they filed the complaint in the district court of the state of Nevada, in and for Lander county, involved in the second of the actions above entitled.

As illustrative of the respective claims of the parties, the following diagram is inserted, together with some representations found in the record of the character of the surrounding ground:

Digitized by Google

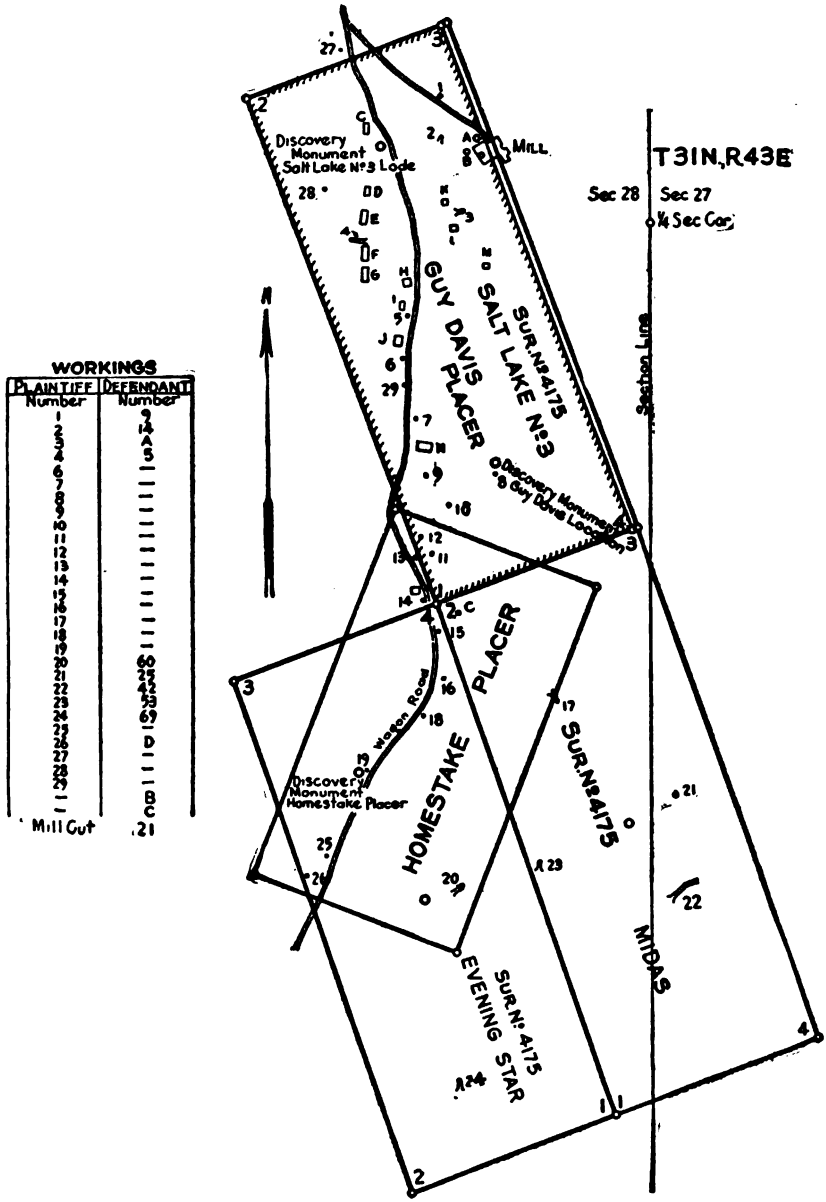

MAP OF MINING CLAIMS INVOLVED
COMPILED FROM
PLAINTIFF'S EXHIBIT 'A', DEFENDANT'S EXHIBIT '5'

Digitized by Google

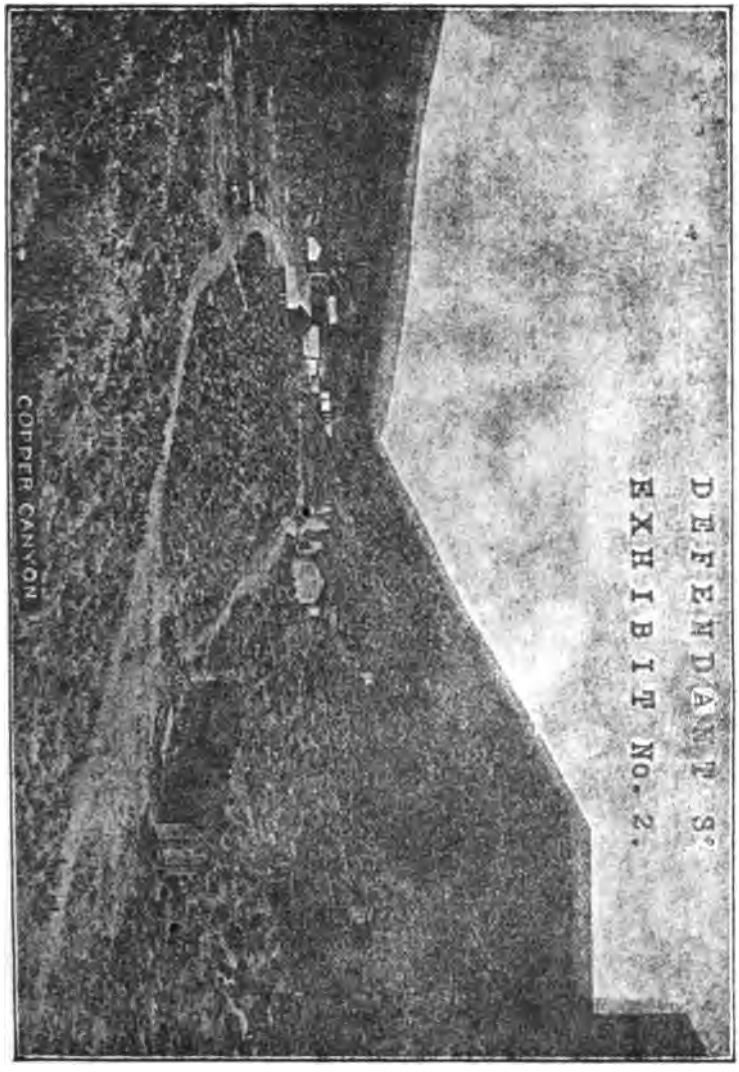

Showing topography, contour of bed rock, and evident depth of soil at different points, about the buildings on Salt Lake No. 3. Looking south.

Digitized by Google

Digitized by Google

The two actions were by stipulation of the respective parties thereto consolidated and tried together in the court below upon the same evidence, and resulted in a general verdict in each case in favor of the plaintiffs, together with a special verdict to the effect that there was no valid discovery of mineral within either of the lode claims relied on by the defendant to the actions, prior to the entry on the ground embraced by them on the part of the plaintiffs and their grantors, upon which verdicts respective judgments were entered in favor of the plaintiffs for the possession of the ground embraced by the respective placer claims.

From those judgments the respective appeals were taken, as well as from the order denying a new trial in each case; the plaintiff in error also suing out a writ of error in each of the cases.

P. G. Ellis, of Salt Lake City, Utah, for appellant and plaintiff in error.

George B. Thatcher, of Carson City, Nev., William Forman, of Tonopah, Nev., F. H. Norcross, of Reno, Nev., and A. A. Rosenshine, of San Francisco, Cal., for appellees and defendants in error.

Before GILBERT, ROSS, and HUNT, Circuit Judges.

ROSS, Circuit Judge (after stating the facts as above). The act of Congress of July 26, 1866 (14 Stat. 251, c. 262), in which provision was made for contests of rival mining claims to mining ground by the filing of adverse claims in the land office and their subsequent trial in a court of competent jurisdiction, was subsequently made more specific by the act of May 10, 1872 (17 Stat. 91, c. 152), and from that carried into the Revised Statutes as sections 2325 and 2326. An amendment to the latter section was made by act approved March 3, 1881 (21 Stat. 505, c. 140 [Comp. St. 1916, § 4625]), by which it was declared:

"That if, in any action brought pursuant to section twenty-three hundred and twenty-six of the Revised Statutes, title to the ground in controversy shall not be established by either party, the jury shall so find, and judgment shall be entered according to the verdict."

Referring to the latter act in the case of Perego v. Dodge, 163 U. S. 160, 167, 168, 16 Sup. Ct. 971, 974 (41 L. Ed. 113), the Supreme Court said that it did not regard it "as intended or requiring all suits under section 2326 to be actions at law and to be tried by a jury"—saying:

"We do not think the intention of this act was to change the methods of trial. Its manifest object was to provide for an adjudication, in the case supposed, that neither party was entitled to the property, so that the applicant could not go forward with his proceedings in the land office simply because the adverse claimant had failed to make out his case, if he had also failed. In other words, the duty was imposed on the court to enter such judgment or decree as would evidence that the applicant had not established the right of possession, and was for that reason not entitled to a patent. The whole proceeding is merely in aid of the land department, and the object of the amendment was to secure that aid as much in cases where both parties failed to establish title as where judgment was rendered in favor of either, and while the finding by a jury is referred to, we think that, where the adverse claimant chooses to proceed by bill to quiet title, and as between him and the applicant for the patent neither is found entitled to relief, the court can render a decree to that effect, just as it would render judgment on a verdict if the action were at law. If Congress had intended to provide that litigation of this sort must be at law, or must invariably be tried by a jury,

Digitized by Google

it would have said so. There is nothing to indicate the intention thus to circumscribe resort to the accustomed modes of procedure or to prevent the parties from submitting the determination of their controversies to the court."

By section 2325 the applicant for a patent to a mining claim is required to file with his application the evidence of his right to it, and the register of the land office is thereupon required to cause notice of such application to be published in a prescribed way for 60 days, during which time any adverse claimant to any part of the location described in the application is required to file an adverse claim in the land office. The next section—2326—is as follows:

"Where an adverse claim is filed during the period of publication, it shall be upon oath of the person or persons making the same, and shall show the nature, boundaries, and extent of such adverse claim, and all proceedings, except the publication of notice and making and filing of the affidavit thereof, shall be stayed until the controversy shall have been settled or decided by a court of competent jurisdiction, or the adverse claim waived. It shall be the duty of the adverse claimant, within thirty days after filing his claim, to commence proceedings in a court of competent jurisdiction, to determine the question of the right of possession, and prosecute the same with reasonable diligence to final judgment; and a failure so to do shall be a waiver of his adverse claim. After such judgment shall have been rendered, the party entitled to the possession of the claim, or any portion thereof, may, without giving further notice, file a certified copy of the judgment-roll with the register of the land office, together with the certificate of the surveyor general that the requisite amount of labor has been expended or improvements made thereon, and the description required in other cases, and shall pay to the receiver five dollars per acre for his claim, together with the proper fees, whereupon the whole proceedings and the judgment roll shall be certified by the register to the Commissioner of the General Land Office, and a patent shall issue thereon for the claim, or such portion thereof as the applicant shall appear, from the decision of the court, to rightly possess. If it appears from the decision of the court that several parties are entitled to separate and different portions of the claim, each party may pay for his portion of the claim, with the proper fees and file the certificate and description by the surveyor general, whereupon the register shall certify the proceedings and judgment roll to the Commissioner of the General Land Office, as in the preceding case, and patents shall issue to the several parties according to their respective rights. Nothing herein contained shall be construed to prevent the alienation of the title conveyed by a patent for a mining claim to any person whatever."

It will be seen from the express language of this statute that the question so to be transferred from the land office to a court of competent jurisdiction for decision is that of the right of possession of the mining ground respecting which the contest has arisen in the land office—the title to the ground of course remaining in the government for disposal in accordance with the judgment of the court and after compliance with all the other requirements of the statute. No form of action is prescribed by the statute, and no court other than one of competent jurisdiction is designated.

Prior to the passage of any mining law by Congress, both the Land Department and the courts always acted upon the rule that all mineral locations were to be governed by the local laws, rules, and customs in force at the time of the location. Glacier Mining Co. v. Willis, 127 U. S. 471, 482, 8 Sup. Ct. 1214, 32 L. Ed. 172, and cases there cited. That such practice was intended by Congress to be continued is clearly

Digitized by Google

shown by the express provisions of section 2 of the act of July 26, 1866 (14 Stat. 251), and by section 2332 of the Revised Statutes (Comp. St. 1916, § 4631), the former of which provides, among other things, that:

"Whenever any person or association of persons claims a vein or lode of quartz or other rock in place, bearing gold, silver, cinnabar, or copper, having previously occupied and improved the same according to the local customs or rules of miners in the district where the same is situated, and having expended in actual labor and improvements thereon an amount of not less than $1,000, and in regard to whose possession there is no controversy or opposing claim, it shall, and may be lawful for such claimant or association of claimants to file in the local land office a diagram of the same so extended laterally or otherwise as to conform to the local laws, customs, and usages of miners, and to enter such tract and receive a patent therefor granting such mine," etc.

—and the second of which, to wit, section 2332 of the Revised Statutes, declares, among other things, that:

"Where such person or association, they and their grantors, have held and worked their claims for a period equal to the time prescribed by the statute of limitations for mining claims of the state or territory where the same may be situated, evidence of such possession and working of the claims for such period shall be sufficient to establish a right to a patent thereto under this chapter, in the absence of any adverse claim."

Looking at the scheme presented by sections 2325 and 2326 of the Revised Statutes, said the Supreme Court in Richmond Mining Co. v. Rose, 114 U. S. 576, 584, 5 Sup. Ct. 1055, 1059 (29 L. Ed. 273)—

"and which relates solely to securing patents for mining claims, it is apparent that the law intended, in every instance where there was a possibility that one of these claims conflicted with another, to give opportunity to have the conflict decided by a judicial tribunal before the rights of the parties were foreclosed or embarrassed by the issue of a patent to either claimant. The wisdom of this is apparent when we consider its effect upon the value of the patent, which is thereby rendered conclusive as to all rights which could have been asserted in this proceeding, and that it enabled this to be done in the form of an action in a court of the vicinage, where the witnesses could be produced, and a jury, largely of miners, could pass upon the rights of the parties under instruction as to the law from the court. It is in full accord with this purpose that the law should declare, as it does, that when this contest is inaugurated the land officers shall proceed no further until the court had decided, and that they shall then be governed by that decision; to which end a copy of the record is to be filed in their office. They have no further act of judgment to exercise. If the court decides for one party or the other the Land Department is bound by the decision. If it decides that neither party has established a right to the mine or any part of it, this is equally binding as the case then stands. With all this these officers have no right to interfere. After the decision they are governed by it. Before the decision, once the proceeding is initiated, their function is suspended."

In the subsequent case of Iron Silver Mining Co. v. Campbell, 135 U. S. 286, 299, 10 Sup. Ct. 765, 769 (34 L. Ed. 155), the same court, in speaking of the same statute, said:

"The purpose of the statute seems to be that, where there are two claimants to the same mine, neither of whom has yet acquired the title from the government, they shall bring their respective claims to the same property, in the manner prescribed in the statute, before some judicial tribunal located in the neighborhood where the property is, and that the result of this judicial investigation shall govern the action of the officers of the land department in

Digitized by Google

determining which of these claimants shall have the patent, the final evidence of title, from the government."

Neither the specific courts authorized by section 2326 to try the right of possession of the ground to which conflicting claims arise in the land office, nor the character of such actions being designated by the statute, different rulings were made by the courts, many holding, as was done by a number in this circuit—Shoshone Mining Co. v. Rutter et al., 87 Fed. 801, 31 C. C. A. 223, Doe v. Waterloo Mining Co. (C. C.) 43 Fed. 219, and other cases there referred to—that such actions were equitable in their nature, and that the federal courts had jurisdiction of them regardless of the citizenship of the parties; but on appeal of the case of Shoshone Mining Co. v. Rutter et al., reported in 177 U. S. 505, 20 Sup. Ct. 726, 44 L. Ed. 864, the Supreme Court, while conceding that the question was not free from doubt, held that, inasmuch "as the 'adverse suit' to determine the right of possession may not involve any question as to the construction or effect of the Constitution or laws of the United States, but may present simply a question of fact as to the time of the discovery of mineral, the location of the claim on the ground, or a determination of the meaning and effect of certain local rules and customs prescribed by the miners of the district, or the effect of state statutes, it would seem to follow that it is not one which necessarily arises under the Constitution and laws of the United States," and accordingly concluded that while such suits may sometimes so present questions arising under the Constitution and laws of the United States that the federal courts will have jurisdiction regardless of the citizenship of the parties, yet the mere fact that a suit is an adverse suit authorized by the statutes of the United States is not in and of itself sufficient to vest such jurisdiction, and reversed the judgment appealed from.

From the pleadings in the present cases it is plain that they were actions at law in which the sole issue was the right of possession of the respective mining claims. Being such, the parties were of right entitled to a jury trial; besides which it appears from the records that they expressly stipulated for such a trial in the court below, to which court the cases were, on motion of the defendant thereto, transferred from the state court in which they were commenced, because of the diverse citizenship of the parties.

It is apparent from what has already been said that the issue in the cases depended for its determination upon the above-cited provisions of the statutes of the United States and upon the local laws, rules, and customs of the state and district where the ground in dispute is situate, applied to the facts of the case. A statute of limitations of Nevada regarding mining claims originally enacted as early as November 21, 1861, as amended in 1867, reads as follows:

"3706. Sec. 4. No action for the recovery of mining claims, or for the recovery of the possession thereof, shall be maintained, unless it appear that the plaintiff, or those through or from whom he claims, were seized or possessed of such mining claim, or were the owners thereof, according to the laws and customs of the district embracing the same, within two years before the commencement of such action. Occupation and adverse possession of a mining claim shall consist in holding and working the same, in the usual and cus-

Digitized by Google

tomary mode of holding and working similar claims in the vicinity thereof. All the provisions of this act, which apply to other real estate, so far as applicable, shall be deemed to include and apply to mining claims: Provided, that in such application 'two years' shall be held to be the period intended whenever the term 'five years' is used; and provided, further, that when the terms 'legal title' or 'title' are used, they shall be held to include title acquired by location or occupation, according to the usages, laws, and customs of the district embracing the claim." Cutting's Compiled Laws of Nevada, 1861–1900.

By virtue of that statute and of the provisions of section 2332 of the Revised Statutes, the defendant to these actions in his answer to the complaints set up, among other defenses, that on or about February 2, 1897, the grantors of the defendant, being then citizens of the United States, entered upon its then unappropriated public domain and located the Salt Lake No. 3 lode mining claim, by then and there marking the boundaries thereof as required by law, from which time the defendant and his grantors and predecessors in interest remained in the open, notorious, adverse, and undisputed possession of the said lode mining claim, holding, working, and living thereon; that on or about September 6, 1913, while the said claim was so being held, owned, occupied, and possessed by the defendant, the plaintiffs and their grantors, with full knowledge, wrongfully and without authority entered upon said lode mining claim, without the knowledge or consent of the said defendant, and attempted to locate upon the ground embraced within the said Salt Lake No. 3 lode the Guy Davis placer claim, which attempted location of the plaintiffs and their grantors was and is wholly void and of no effect, and that by reason of the premises alleged the defendant became and now is the owner and holder of the said Salt Lake No. 3 lode claim and the whole of the ground embraced thereby.

In support of that plea of the statute of limitations the defendant to the actions introduced much evidence tending to support it, and going to show that the Salt Lake No. 3, Midas, and Evening Star were three of a dozen or more neighboring lode claims known as the Copper Canyon group of mines that were located by the predecessors in interest of the plaintiff in error many years before the entry upon the same by any of the defendants in error or any of their predecessors in interest and that all of such lode claims have been duly patented by the government except the three here in contest. Evidence was given that the Salt Lake No. 3 was located by two men named, respectively, Clive and Johnson, on the 2d day of February, 1897, and the Midas and Evening Star by Joseph and William T. Jurey March 27, 1907, and that the notices of location thereof were duly recorded and recited on their face the discovery of a vein within the ground so located. Evidence was given of the performance of the required annual assessment work on each of the lode claims in dispute by the locators thereof and their successors in interest, and tending to show their continued adverse occupancy by the successors in interest of the original locators and the doing from time to time of a large amount of work thereon—there having also been erected on the Salt Lake No. 3 claim, as will be seen from the photographs that have

Digitized by Google

been inserted, a mill and other buildings, in one of which houses a watchman of the properties was at all times kept during the times when active work thereon was suspended. Evidence was also given on the part of the plaintiff in error tending to show that, prior to the entry upon any of the ground here in controversy by the defendants in error or any of their predecessors in interest, the plaintiff in error or his predecessors in interest had discovered in the gravel of the narrow canyon that comes down from the hills placer gold, and that that discovery was the cause of an inrush of people, among whom were one or more of the present defendants in error and the predecessors in interest of the others of them, the latter of whom proceeded to make the placer locations Guy Davis and Homestake on the ground previously located by the predecessors in interest of the plaintiff in error.

The record shows without dispute that the sole basis of such intrusion upon the actual possession of the plaintiff in error was and is the contention that no discovery of a lode or vein was ever made within the boundaries of either the Salt Lake No. 3, Midas, or Evening Star lode claims. That discovery of a vein or lode within its boundaries is essential to the validity of any lode claim is beyond question, and the law is well settled that at any time previous to such discovery ground within the boundaries of such a claim, although within the actual possession of the claimant, is open to the entry of others by any legal means for the purpose of locating it under the mining laws. See the numerous cases cited in the recent case of Consolidated Mut. Oil Co. v. United States, 245 Fed. 521, 157 C. C. A. 633.

In the present cases, however, the record shows that there was much evidence introduced on the part of the plaintiff in error tending to show, not only that there was such a discovery within the boundaries of each of the lode claims here in controversy years before the entries thereon and the placer locations under which the defendants in error claim, but that for many years those lode claims had been possessed, worked, and claimed as lode mining ground adversely to all the world except the government. There was, therefore, ample basis in the evidence for some of the instructions to the jury requested by the plaintiff in error on the question of such adverse holding by him and his predecessors in interest, all of which the court below refused to give, to which ruling exceptions were duly reserved. That error was thereby committed, requiring a reversal of the judgments appealed from, we think clear. We need only cite the case of 420 Mining Co. v. Bullion Mining Co., 9 Nev. 241, where the Supreme Court of Nevada said:

"To avoid the statute of limitations, it is claimed by appellant that this action is brought under an act of Congress, and hence that the limitations provided for by the statute of this state do not apply. The act of Congress provides that, where an adverse claim is filed within the time and in the manner specified in said act, certain proceedings 'shall be stayed until the controversy shall have been settled or decided by a court of competent jurisdiction, or the adverse claim waived. It shall be the duty of the adverse claimant, within 30 days after filing his claim, to commence proceedings in a court of competent jurisdiction to determine the question of the right of possession and prosecute the same with reasonable diligence to final judgment, and a failure to do so shall be a waiver of his adverse claim.' The act fur-

Digitized by Google

ther provides that 'after such judgment shall have been rendered, the party entitled to the possession of the claim * * * may * * * file a certified copy of the judgment roll with the register of the land office,' and upon compliance with this and other provisions in said act 'a patent shall issue thereon for the claim, or such portion thereof as the applicant shall appear, from the decision of the court, to rightly possess.' U. S. Stats. 1872, p. 91, § 7. Congress did not, by the passage of this act, or by the acts passed July 26, 1866, and July 9, 1870, confer any additional jurisdiction upon the state courts. The object of the law, as we understand it, was to require parties protesting against the issuance of a patent to go into the state courts of competent jurisdiction, and institute such proceedings as they might under the different forms of action, therein allowed, elect, and there try 'the rights of possession' to such claim and have the question determined. The acts of Congress do not attempt to confer any jurisdiction, not already possessed by the state courts, nor to prescribe a different form of action. If the parties protesting are in possession of the ground in dispute, they can bring their action under section 256 of the Civil Practice Act (Stats. 1869, p. 239), or, if they have been ousted from the possession, they could bring their action of ejectment; and in either action 'the rights of possession' to such claim could be finally settled and determined. We are of opinion that when the action is brought, whatever may be its character, it must be tried by the same rules, governed by the same principles, and controlled by the same statutes that apply to such actions in our state courts, irrespective of the acts of Congress. The fact, as found by the court, that the defendant had been in the actual, exclusive, and uninterrupted occupation and possession of all the mining ground in dispute, claiming title thereto adversely to plaintiff, for more than seven years prior to the commencement of this suit constitutes a complete bar to this action. 1 Comp. Laws, 243, 244, §§ 4, 5. To have maintained any action in our state courts 'to try the rights of possession' to a mining claim, the plaintiff must have shown that it, or those through or from whom it claims, 'were seized or possessed of such mining claim, or were the owners thereof, according to the laws and customs of the district embracing the same, within two years before the commencement of such action.' 1 Comp. L. 1019, § 4."

Besides the testimony of the witnesses regarding the essential discovery within each of the lode claims and regarding the adverse holding and working of the disputed ground by the plaintiff in error and his predecessors in interest for much more than the period prescribed by the statute of limitations, each of the notices of location of the lode claims in controversy, duly recorded, expressly recited, as has been said, the fact of such discovery. Such recital we held in the case of Vogel v. Warsing, 146 Fed. 949, 951, 77 C. C. A. 199, 201, "creates a presumption of discovery of mineral and of a valid location." See, also, Harris v. Equator Mining & Smelting Co. (C. C.) 8 Fed. 863; Cheesman v. Shreeve (C. C.) 40 Fed. 791; Cheesman v. Hart (C. C.) 42 Fed. 98.

The appeals are dismissed, and in each case the judgment is reversed, and the cause remanded to the court below for a new trial.

HUNT, Circuit Judge (concurring). Among other requests for instruction upon adverse possession, the defendant asked the court to charge as follows:

"The court instructs the jury that if you find from the evidence that the defendant and his grantors had entered and held possession of the lode mining claims involved in these actions, and worked the same in the usual and customary way in the vicinity thereof for a period of two years prior to the making of the placer locations of the plaintiffs, then the law presumes in aid thereof that all the acts necessary to a valid location of said lode mining claims had

Digitized by Google

been done and performed at the time of such lode mining locations, and that such possession (having the legal effect of a location under the law) is sufficient to give the defendant's grantors a lawful right to the possession of said mining claims, if kept alive as required by law, as against the subsequent placer locations of the plaintiffs' grantors."

The court, however, entirely disregarded the question of adverse possession, and said:

"In the first place, I don't think there is any adverse possession in the case, so the instructions based on adverse possession will not be given. I exclude them, not because they do not correctly state the law, but simply because I regard them as unnecessary."

Thus the jury were not advised that any presumption existed by reason of long-continued possession, claim, and working or improvement by defendant, and the court expressly confined the issues to the question of a valid discovery by the lode locators prior to the time when the placer locators went on the ground. Refusal to consider and instruct upon the question of adverse possession I think was material error. Open and exclusive possession had been in defendant or his predecessors for years. It was accepted that location notices in compliance with law had been posted and filed, that the annual assessment work had been done, and that much additional expenditure was made upon the claims before the placer locations were filed. Witnesses also testified to facts tending to show the existence of veins and lodes at the time of original location; and the general mineral character of the country was not disputed. This evidence made a strong prima facie conclusion as against the placer claimants in favor of discovery by defendant. It established a presumption whereby the truth of a discovery was to be assumed, and the legal consequences attaching to it, and the burden thrown upon the plaintiff by reason of the presumption, should have been explained to the jury. As a general rule the benefit of such a presumption is specially important in a mining case, for it might very properly, in a case otherwise difficult to solve, save the rights of a mine owner as against one who, after many years have gone by, seeks to maintain another location, contending that there never was a discovery by the original locator. Common experience tells us that death or inability to gather witnesses often makes it practically impossible to prove as an affirmative physical fact an original discovery of mineral at the time of location. The presumption should serve as evidence in favor of the claimant until his opponent has produced evidence which overthrows the presumption. It seems to me that any other rule would imperil the value of unpatented mines located a long time ago and conveyed by the locators to bona fide purchasers who may have expended large sums in development. In commenting upon the reasonableness of the presumption in favor of discovery where there has been staking off, location filing, possession for years, and prosecution of work, Judge Philips, in Cheesman v. Hart (C. C.) 42 Fed. 98, said:

"After this he sells to an honest man, and passes out of view or dies. All the subsequent workings go to show the existence of a lode or vein on the claim of more or less importance. Can it be that after the lapse of many years the assignee must lose his claim because of his inability to produce

Digitized by Google

the lost or the dead, and prove affirmatively an actual visible discovery by the original locator of ore in place where he dug? Possibly the charge in this particular would have been more theoretically correct, had the court told the jury that it was not necessary that defendants should establish such discovery by witnesses to the physical fact at the time. But the same might be inferred from the certificate of location, the manifestations of workings done, the long tenure of the claim, the development of a vein on the claim by subsequent working, and from all the surrounding circumstances."

GILBERT, Circuit Judge (dissenting). The court below properly submitted to the jury the question whether a valid discovery had been made by the lode locators prior to the placer locations and discoveries, and instructed the jury that the locators of the placer claims had each performed all of the acts necessary and required by the statutes of the United States and the laws of the state of Nevada in the discovery and location of a placer claim. No exception was taken to that instruction. Again, the court said to the jury:

"A competent person may go on the public domain of the United States with the bona fide intention of making a discovery of mineral, and may define the boundaries of his claim by means of notices and monuments thereon, and so long as such locator is in the actual possession of the location so defined, endeavoring to make a discovery, he will be entitled to the peaceable possession of such claim, as against one entering thereon as a trespasser; but in the absence of a discovery, should he permit another competent person to go peaceably upon the claim, and should such person make a valid discovery of mineral, and locate the same, and in all things comply with the requirements as to monumenting, posting notices, and recordation, then such subsequent locator would acquire title to such claim so located, subject only to the paramount title of the United States."

The jury returned three special verdicts, finding that no valid discovery of a lode within the limits of either of the lode claims was made by the defendant or his grantors prior to the dates when the placer claims were located. In the opinion of the majority of this court the judgment of the court below is to be reversed for the refusal of the trial court to give a requested instruction on the subject of adverse possession. The statute of Nevada fixes a period of two years as necessary for title by adverse possession, and provides that the "occupation and adverse possession of a mining claim shall consist in holding and working the same in the usual and customary mode of holding and working similar claims in the vicinity thereof." It is by that statute that the defendants' claim of adverse possession must be measured. The defendant had pleaded adverse possession, but not in the language of the statute. He alleged only that he and his predecessors in interest had been, for the designated period of time, in the "open, notorious, adverse, and undisputed possession of said mining claim, holding, living and working upon said lode mining claim."

The requested instruction, which was refused, was framed in the language of the statute of limitations of Nevada. It was refused, evidently because the trial court found that there were in the evidence no facts to constitute such adverse possession. In so holding the trial court was clearly right. There was no evidence whatever that the lode claim had ever been worked "in the usual and customary manner of holding and working similar claims in the vicinity," or had ever been

Digitized by Google

worked at all. All the proof of work done on the lode mining claim prior to the plaintiff's placer locations was proof to show that the annual assessment work had been done thereon. That work consisted in sinking shafts and excavating tunnels on the claims; but in none of them and nowhere on any of the claims was an ore body developed, from none of them was any ore ever taken, and in none of them was there any "working" of a claim. No witness testified that either of the claims had been worked in the usual and customary mode of holding and working similar claims. It seems too clear to require discussion that doing the annual assessment work, building a road upon a claim, or erecting a structure upon it is not working the same as a mining claim. The statute of Nevada can avail the holder of a mining claim by adverse possession only upon the theory that the claim has been shown to be a workable claim, and that the act of working it involves discovery and stands for proof of discovery. If the defendant claimed adverse possession under the statute of Nevada, it was for him, not only to plead the statute, but to prove compliance with the same in all particulars.

I submit that the decision of the majority of the court wholly disregards the provisions of that statute, and commits this court to the proposition that in Nevada mining land, or indeed any land, may be acquired as against all except the United States by filing a location notice, marking the ground, and doing the annual assessment work for a period of two years, and without making a discovery. Such is not the law. The words of the statute are:

> "Holding and working the same in the usual and customary mode of holding and working similar claims in the vicinity."

Obviously this should mean more than merely holding. One who locates a claim, remains in the possession thereof, and does the annual assessment work thereon, but makes no discovery, may be conceded to be holding the claim; but he is not working it in the manner prescribed by the statute. If it had been the intention of the Legislature to say that title to a mining claim may be had, as against all but the government, by locating and holding the same and doing the annual assessment work thereon for a period of two years, we must assume that such would have been the language of the act, and, if such had been the language of the act, I submit that it would have been void, for it is a fundamental doctrine of the mining law that one who locates and occupies and does the annual assessment work on mineral land cannot hold the same against another who peaceably, and not fraudulently or clandestinely, locates the ground and is the first to make discovery thereon. Section 2320 of the Revised Statutes says that no location of a mining claim shall be made until discovery of the vein or lode within the limits of the claim located, and numerous decisions affirm the rule that location can rest only upon actual discovery, and that without discovery no rights can be acquired save the right to retain possession while seeking discovery. King v. Amy & Silversmith Min. Co., 152 U. S. 222, 227, 14 Sup. Ct. 510, 38 L. Ed. 419; Mining Co. v. Tunnel Co., 196 U. S. 337, 345, 25 Sup. Ct. 266, 49 L. Ed. 501; Jupiter Min. Co. v. Bodie

Digitized by Google

Consol. Min. Co. (C. C.) 11 Fed. 666; Steele v. Tanana Mines R. Co., 148 Fed. 678, 78 C. C. A. 412. The true doctrine is stated in Humphreys v. Idaho Gold Mines Development Co., 21 Idaho, 126, 120 Pac. 823, 40 L. R. A. (N. S.) 817, where the court said:

"It still remains, however, for the person who asserts claim by adverse possession to have made a mineral discovery, and to have performed the annual assessment work, and to have had the boundaries of his claim so marked and indicated as to afford actual notice of the extent and boundaries of his claim and possession, and to have maintained an actual possession and excluded all adverse claimants for the full period prescribed by the statute."

Our decision in Vogel v. Warsing, 146 Fed. 948, 951, 77 C. C. A. 199, sustaining a prima facie presumption of discovery, and other similar cases cited in the opinion of the majority of this court herein have no application to the present case. There is no place here for the indulgence of a presumption of discovery. The question of discovery by the lode claimants was directly placed in issue. It was a question of fact. It was the principal issue in the case. The defendant presented all his available testimony to show actual discovery. The jury by special verdicts on that issue alone found that there was no discovery.

(249 Fed. 97)

MORRISON v. RIEMAN.

(Circuit Court of Appeals, Seventh Circuit. September 4, 1917. Rehearing Denied December 20, 1917.)

No. 2451.

1. BANKRUPTCY ⟹93—PROCEEDINGS—JURY TRIAL.

Where a bankrupt, having demanded a jury trial on the question of his insolvency, as allowed by Bankruptcy Act July 1, 1898, c. 541, § 19, 30 Stat. 551 (Comp. St. 1916, § 9603), moved for leave to withdraw the request, which was denied, a jury being called notwithstanding, the calling of a jury was upon the court's own motion, and the verdict was merely advisory.

2. BANKRUPTCY ⟹467—APPEAL—MATTERS ASSIGNABLE AS ERROR.

Where the bankruptcy court on its own motion submitted to a jury the question of the alleged bankrupt's insolvency, the verdict of a jury is merely advisory, and error is not predicable on the court's remarks, or on its charge to the jury.

3. BANKRUPTCY ⟹91(2)—INSOLVENCY—FINDINGS.

In a proceeding in bankruptcy, evidence *held* to warrant a finding that, after the bankrupt conveyed all but one parcel of his lands, he was insolvent.

4. BANKRUPTCY ⟹57—ACTS OF BANKRUPTCY—WHAT CONSTITUTES.

Where property conveyed by an alleged bankrupt largely exceeded debts discharged or assumed by the grantee, the conveyance must be deemed an act of bankruptcy, and intended to hinder and delay the petitioning creditor, whose claim was not assumed, though the grantee, as part of the consideration, executed and secured the approval of a bond superseding, for purposes of appeal, a judgment in favor of the petitioning creditor.

⟹For other cases see same topic & KEY-NUMBER in all Key-Numbered Digests & Indexes

Digitized by Google

5. BANKRUPTCY ⟹76(1)—PETITIONING CREDITORS—"SECURED CREDITOR."

While Bankruptcy Act, § 1a (23) (Comp. St. 1916, § 9585), provides that the term "secured creditor" shall include a creditor who has security for his debt upon the property of the bankrupt, or who owns such a debt for which some indorser, surety or other person secondarily liable, has such security upon the bankrupt's assets, and sections 56b, 57e, 57g, and 57h (Comp. St. 1916, §§ 9640, 9641), contain no express provision allowing a secured creditor to surrender his security, so as to come within section 59b (section 9643), and file a petition, a judgment creditor, whose judgment had been superseded by a bond signed by a grantee of a bankrupt, may surrender his security and file a petition in bankruptcy, for, if such creditor's judgment were reversed and the cause remanded, his security would be lost, although he might still have a claim provable within section 63a (4) (Comp. St. 1916, § 9647).

[Ed. Note.—For other definitions, see Words and Phrases, First and Second Series, Secured Creditor.]

6. BANKRUPTCY ⟹84—PETITION—AMENDMENT.

In view of Bankruptcy Act, §§ 59f, 59g, allowing creditors other than original petitioners to join in an involuntary petition in bankruptcy, and rule 86, making provision for amendments, a petitioning creditor, who was secured, may thereafter waive his security and amend his petition.

7. BANKRUPTCY ⟹84—AMENDMENTS—ALLOWANCE.

The general power to permit amendments, within sound discretion, inheres in bankruptcy as well as in other courts.

8. BANKRUPTCY ⟹76(1)—SECURITY—WAIVER.

Where a secured creditor deliberately, and not through error or inadvertence, files his claim as unsecured, making no mention of his security, he waives it in favor of the estate, and cannot, after adjudication, assert it; so a petitioning creditor, who was secured, may by express waiver and surrender of his security bring himself within the terms of Bankruptcy Act, § 59b, and alone file an involuntary petition.

Appeal from the District Court of the United States for the Eastern Division of the Northern District of Illinois.

On petition of Charles S. Rieman, Edward W. Morrison was adjudicated a bankrupt, and he appeals. Affirmed, on condition, and, in event of petitioner's failure to comply with condition, cause held for further consideration.

Appeal from order adjudicating Morrison a bankrupt. Morrison's property consisted of real estate in Chicago valued at over $500,000. Rieman, having a claim in contract against Morrison, on March 22, 1916, recovered a judgment thereon in the municipal court of Chicago for $90,188.01, and execution on the judgment issued. By warranty deed of April 20, 1916, Morrison made absolute conveyance of all his real estate to James R. Ward, for a recited consideration of "$100,000 in hand paid and other consideration." Morrison and Ward testified that the consideration for the conveyance was the cancellation of all then existing indebtedness of Morrison to Ward, and the assumption and payment by Ward of all Morrison's then outstanding debts, except that to Rieman (to whom Morrison denied owing anything), and the undertaking by Ward to prosecute for Morrison appellate proceedings from the Rieman judgment, and secure requisite bond for staying collection of the judgment pending such determination of such proceedings. A writ of error was sued out in the Appellate Court of Illinois, and on June 7, 1916, a supersedeas bond in penal sum of $100,000, signed by Ward as surety, was approved by that court and filed, and supersedeas issued accordingly. The proceeding on error is still pending and undetermined. August 16, 1916, Rieman alone filed petition in bankruptcy, alleging the indebtedness to him from Morrison to be $90,206.76, upon a contract, the debt being evidenced by a judg-

Digitized by Google

ment for that amount, and alleging Morrison's insolvency, that his creditors were less than 12, and that he had committed acts of bankruptcy by conveyance of his property within four months by way of preference to certain creditors, to Rieman's detriment, and through such conveyance hindering, delaying, and defrauding his creditors other than those so preferred. Morrison filed his answer denying insolvency and the commission of the acts of bankruptcy charged, and asking for a jury trial of the issues. In his amended answer the demand for a jury trial was not renewed. On trial of the issues by a jury there was a verdict against Morrison, and November 15, 1916, he was adjudicated bankrupt.

At the time of the adjudication there was produced in court, and was thereafter filed for record, a deed from Ward reconveying to Morrison a piece of the said real estate, known as the Sebor street property. It was testified by Ward and Morrison that this piece had been inadvertently included in the deed to Ward; that such fact was discovered during the proceedings for obtaining the supersedeas; that the deed back to Morrison was executed and delivered to him on the day of its date, July 17, 1916; and that it remained in Morrison's possession unrecorded, Morrison continuing as theretofore to collect the income from that property. There was sharp contrariety of evidence as to the value of this piece, the testimony of the expert witnesses ranging from $130,000 to $41,000. After verdict, and before adjudication, petitioner by leave of court filed a verified amendment to his petition as follows: "That whatever lien or security your petitioner has or had at the time of the filing of the petition herein by reason of his said judgment, or by virtue of the execution issued thereon, the said petitioner does hereby release and waive as to any estate which the said alleged bankrupt possessed or owned at the time of the filing of the original petition herein, and does hereby surrender any such security or lien to the estate of the said alleged bankrupt. This petitioner further hereby releases and surrenders whatever lien or security he has or may have on any property or estate of the said alleged bankrupt, or which may hereafter come into the estate or be recovered for the estate of the said alleged bankrupt."

The assignment of errors challenges the finding of insolvency and of commission of acts of bankruptcy, the provability of Rieman's claim, and his right to be a petitioning creditor, and the propriety of certain remarks of the court made in the presence of the jury, and of certain parts of the court's charge to the jury.

James R. Ward and Frank H. Culver, both of Chicago, Ill., for appellant.

James Rosenthal, of Chicago, Ill., for appellee.

Before BAKER, ALSCHULER, and EVANS, Circuit Judges.

ALSCHULER, Circuit Judge (after stating the facts as above). [1, 2] Respecting the errors alleged based on remarks by the court, and the charge to the jury, it appears that in appellant's original answer jury trial was demanded, but in his amended answer such demand was not renewed; and before the jury was called he moved the court for leave to withdraw his demand for a jury, and appellee joined in this request, which was denied by the court, and a jury was called notwithstanding. While the alleged bankrupt may demand a jury trial (Bankruptcy Act, § 19), these facts amounted to a waiver of jury trial, and the calling of the jury thereafter was upon the court's own motion, just as would have been the case had the court called a jury without any demand therefor having ever been made. The verdict is therefore not of binding force, but is advisory to the court as in issues out of chancery (Carpenter v. Cudd, 174 Fed. 603, 98 C. C. A. 449, 20 Ann. Cas. 977; Oil Well Supply Co. v. Hall, 128 Fed. 875, 63 C. C.

Digitized by Google

A. 343), and as in chancery this court will search the record to determine therefrom whether a proper order or decree has been entered, regardless of the jury's verdict, save only so far as the court may thereby be advised. In such case error is not predicable on the court's remarks or its charge to the jury.

[3] On the question of Morrison's solvency, if it be assumed that the title of the Sebor street property was all the time in Morrison, it is apparent that it alone would not rescue him from the charge of insolvency as against Rieman's claim for over $90,000. The evidence of its value ranged from a maximum of $130,000 to a minimum of $41,000, with but little, if anything, in the evidence corroborative of the one more than of the other figure. The finding was thus warranted that the Sebor street property was not worth enough to meet the Rieman claim; and of course all his other property, which, as was testified, had been absolutely and irrevocably conveyed to Ward, could have no bearing on appellant's solvency.

[4] Assuming that Rieman was properly a petitioning creditor, was the finding unwarranted that acts of bankruptcy were committed through the conveyance to Ward? Ward and Morrison both testified that by the conveyance Ward and all other creditors of Morrison, except Rieman, were paid or to be paid. The amount of such debts is not certain under the evidence. Ward claims it was about $100,000, but, whatever the amount, the payment through the conveyance was clearly preferential as against Rieman, thus constituting an act of bankruptcy by Morrison. The fact that Ward signed the supersedeas bond and secured its approval in part consideration of the conveyance to him cannot as against a petition in bankruptcy be regarded as a consideration, which, as between Morrison and Rieman, would support the conveyance for the concededly large surplus in value of the property conveyed, over and above Morrison's debts so discharged or assumed. As to such surplus in value, the conclusion was warranted that the conveyance was in hindrance and delay of Rieman, and an act of bankruptcy. That Morrison and Ward may have believed Rieman's claim unconscionable, and that ultimately it will be defeated, is beside any question here.

[5] The main contention of appellant is that through the lien of Rieman's judgment upon all of Morrison's real estate—the Sebor street property as well as that which was conveyed to Ward, and through the supersedeas bond given in the Illinois Appellate Court, Rieman's judgment was fully secured; that being a secured creditor within the meaning of the Bankruptcy Act, with security valued at more than the amount of his claim, he did not have a provable claim against the bankrupt, and not having such provable claim he was disqualified from being a petitioning creditor.

Section 59b of the Bankruptcy Act requires that the single petitioning creditor (where the creditors are less than 12) shall have a provable claim of $500 or more in excess of the value of securities held by him. Section 1a (23) provides that:

"'Secured creditor' shall include a creditor who has security for his debt upon the property of the bankrupt, of a nature to be assignable under this

Digitized by Google

act, or who owns such a debt for which some indorser, surety, or other persons secondarily liable for the bankrupt has such security upon the bankrupt's assets."

Whether the lien of this judgment, and the supersedeas bond, did constitute Rieman a secured creditor, within the meaning of the quoted section, may be unnecessary to be considered in view of certain other proceedings in the cause. It appears that after the verdict of the jury, and before the adjudication, by leave of court Rieman filed an amendment to his petition, undertaking to release and to waive the lien of his judgment against any property of the bankrupt subject thereto, presumably with the view of surrendering any security for his claim. If holding security rendered his claim unprovable, and himself therefore disqualified to be a petitioning creditor, may he by voluntarily surrendering the security make his claim provable, and thus qualify him to be a petitioning creditor?

There is no section of the Bankruptcy Act which specifies that this may be done. Sections 56b and 57e, 57g, and 57h deal with the ascertainment of the amount of claims above the value of securities, and with the surrender of preferences, and the like. The surrender of securities is not dealt with. But we see no reason why one holding security may not surrender it and prove his whole claim. Collier states the rule as follows:

"A secured creditor may or may not surrender his security as he chooses. If he does, it inures to the benefit of all creditors, and his claim, if otherwise unobjectionable, is allowable at the full amount." Collier on Bankruptcy (1914) pp. 721, 722.

Brandenburg says:

"A secured creditor may file proof of claim at his option, but unless a secured creditor surrenders his security, and proves his debt as unsecured, he is required to make proof of the whole debt as in the case of an unsecured debt, except a statement of all securities should be included in the proof." Brandenburg, Bankruptcy (1917) § 631.

In the same section it is stated that a secured creditor has three alternatives: First, he may prove the amount of his claim, specifying the securities held; second, he may decline to make any proof and retain his security; and, third, he may either directly or indirectly waive his security and prove his claim as unsecured. Assuming that the judgment lien and the supersedeas bond constituted Rieman a secured creditor, the instant case illustrates the embarrassment and disadvantage which might ensue if he may not waive and surrender the security and proceed as an unsecured creditor. If, by the conveyance to Ward, Morrison preferred certain of his creditors, any creditor injured thereby, holding a provable claim, could within four months resort to bankruptcy for relief. The state law would not assist him, since in Illinois an insolvent debtor may with impunity give preference to some creditors over others. Farwell et al. v. Nilsson et al., 133 Ill. 45, 24 N. E. 74; Morriss et al. v. Blackman et al., 179 Ill. 103, 53 N. E. 547; Friedman v. Lesher, 198 Ill. 21, 64 N. E. 736, 92 Am. St. Rep. 255. But Rieman, if considered a secured creditor, and therefore not qualified to be a petitioner, could do nothing but take

Digitized by Google

his chances on maintaining his lien through affirmance of his judgment. If this were reversed, and the cause remanded for a new trial, his security would at once vanish; but, his claim being founded in contract, he might still have a provable debt against Morrison. Section 63a(4). In the meantime, however, four months would have elapsed since the preferential payment through the conveyance, and he would then be wholly without relief against the preference, although his claim might be eventually adjudged in his favor. This would in a sense be penalizing a creditor who reduces his claim to judgment, which may for the time being be a lien on the debtor's real estate, through withdrawing from him the protection of the bankruptcy law against preferential payments—protection which is accorded to those creditors who had not yet proceeded so far as to obtain judgment which gave its holder a lien which would afford him sufficient security if the judgment remains unreversed.

[6-8] Appellant insists that, since the waiver or surrender was not made before or at the time the petition was filed, it could not subsequently be made by way of amendment or otherwise. We think the act manifests a policy of liberality in regard to amendment. Section 59f provides that creditors other than original petitioners may at any time enter appearance and join in the petition to file answer and be heard in opposition to it; and section 59g requires a notice to other creditors before any petition shall be dismissed for want of prosecution or by consent evidently in order that there may be no dismissal of a petition if as to any one it ought to be retained. Rule 86 makes provision for amendments. The general power to permit amendments within sound discretion inheres in bankruptcy as well as in other courts. Armstrong v. Fernandez, 208 U. S. 324, 330, 28 Sup. Ct. 419, 52 L. Ed. 514; Chicago Motor Vehicle Co. v. Am. Oak Leather Co., 141 Fed. 518, 72 C. C. A. 576 (7th C. C. A.); In re Shoesmith, 135 Fed. 684, 68 C. C. A. 322 (7th C. C. A.). Instances are quite frequent where adjudications of bankruptcy or allowance of claims have been made contingent upon the petitioner or claimant doing things which in strictness should before have been done and set forth in petition or proof of claim. In re Murphy (D. C.) 225 Fed. 392; Stevens v. Nave-McCord Co., 150 Fed. 71, 80 C. C. A. 25; In re Gillette (D. C.) 104 Fed. 769. But even if the amendment, made when it was, were of no avail, and appellee must rely on his petition as first filed, the rule seems well established that where a secured creditor deliberately, and not through error or inadvertence files his claim as unsecured, making no mention of his security, he thereby waives it in favor of the estate, and cannot, after adjudication, assert it. White v. Crawford (C. C.) 9 Fed. 371; In re Bloss, Fed. Cas. No. 1,562; Brandenburg, Bankruptcy (4th Ed.) p. 479; Collier, Bankruptcy (10th Ed.) pp. 726, 727.

The amendment, however, in our judgment falls short of its probably intended purpose of investing the trustee in bankruptcy, for the benefit of the estate, with whatever right to the security which the petitioner in bankruptcy had. This is particularly so as to the second paragraph of the amendment, which seems to deal with other than the

Digitized by Google

Sebor street property. Waiver and surrender alone might extinguish the lien without benefiting the estate; and unless the estate can have the benefit of the security, the waiver might serve only to increase the general claims against the estate without augmenting its assets. In the instant case we cannot assume that in a proceeding to set aside the conveyance to Ward, if such becomes necessary and is authorized, the trustee will prevail. In the event, therefore, that the Rieman judgment is affirmed, if Rieman should merely have waived his security, and the estate not become invested with it, Ward, holding the title to the property, might become the beneficiary, leaving the unsecured Rieman judgment a general claim against the estate, payable out of assets other than the bond and the lien on the property now held by Ward. If Rieman's judgment is affirmed, it is possible that the Sebor street property plus what the trustee might then realize on the supersedeas bond, if available to him, would prove sufficient to meet the claims allowed for payment, without need to bring into the bankruptcy the property conveyed to Ward, with which, of course, the trustee has no business, save only in case it may become necessary to undertake resort to it in order to pay the debts. While it may be that the waiver and surrender would alone invest the trustee with Rieman's title to the security thus surrendered, there should be no question in this regard.

If, therefore, within 30 days after this date appellee will file with the clerk of the District Court an instrument in writing conveying to the trustee in bankruptcy, hereafter to be named, for the benefit of this bankrupt estate, all interest of appellee in and to any and all lien and security which he holds for the payment of his said judgment, including the supersedeas bond, and the lien acquired through the rendition of the judgment and the execution issued thereon, the order of adjudication will be affirmed, with costs. Otherwise, the cause will be held for further consideration.

(249 Fed. 103)

HAIKU SUGAR CO. et al. v. JOHNSTONE.

(Circuit Court of Appeals, Ninth Circuit. April 1, 1918.)

No. 3090.

1. CORPORATIONS ⟹379—PARTNERSHIP—LIABILITY.

Where corporations are by law authorized to form copartnerships, each corporate member of such a firm is liable as a partner to third persons.

2. JOINT-STOCK COMPANIES ⟹8—PARTNERSHIP — DISTINCTION — TRANSFERABILITY OF SHARES.

The changeability of membership or transferability of shares is often used as a determining criterion between ordinary partnerships and joint-stock companies.

[Ed. Note.—For other definitions, see Words and Phrases, First and Second Series, Joint-Stock Companies and Associations; Partnership.]

⟹For other cases see same topic & KEY-NUMBER in all Key-Numbered Digests & Indexes

Digitized by Google

3. CORPORATIONS ⟹379—PARTNERSHIP—MANAGEMENT—CORPORATE MEMBERS.
Where corporations are allowed by law to form ordinary partnerships with other corporations, it is an incident of such right that representatives of the corporate members can for convenience be selected to manage the firm.

4. JOINT-STOCK COMPANIES ⟹10—PARTNERSHIP ⟹224—DISTINCTION BETWEEN PARTNERSHIP AND JOINT-STOCK COMPANY.
In a joint-stock company, the members have no right to decide what new members shall be admitted; on the other hand, the right of delectus personarum is an inherent quality of an ordinary partnership.

5. PARTNERSHIP ⟹264—CHANGEABILITY IN MEMBERSHIP—BY-LAWS.
The provision in the by-laws of a partnership composed of corporations for existence of the association for 45 years, unless sooner terminated by mutual consent, does not show any plan for changeability in the membership, and dissolution would probably be effected through the transfer of any partner's interest.

6. JOINT-STOCK COMPANIES ⟹23—PARTNERSHIP ⟹227—DISTINCTION.
A joint stock company usually consists of a large number of persons between whom there is no special relation of confidence and the retirement or death of a member works no dissolution, while a partnership though it may consist of several is ordinarily made up of members who are drawn to each other by feelings of mutual confidence and no member is at liberty to retire and substitute another.

7. JOINT-STOCK COMPANIES ⟹18—PARTNERSHIP ⟹139—DISTINCTION.
In a joint-stock company, the business is generally managed by directors or other designated officers of the association, and a shareholder as such is without power to contract for the company; whereas, in a partnership, any member may bind the partnership, this being true, though the partnership is composed of corporations.

8. INTERNAL REVENUE ⟹7—INCOME TAXES—PARTNERSHIP.
Under Sess. Laws Hawaii 1903, Act 51, § 1, permitting any two or more corporations organized under the laws of Hawaii to enter into partnership with each other for the transaction of any lawful business, several corporations, by an agreement dated October 30, 1903, formed a partnership, the by-laws of which provided for management by representatives selected by the several partners, who were to represent the partners according to their respective interests. There were no special partners, and there was no partnership capital stock. *Held* that, as the partnership was lawful under the laws of Hawaii, it could not be treated as a joint-stock company, and so subject to taxation under Income Tax Law Oct. 3, 1913, c. 16, 38 Stat. 114, which applies to every corporation, joint-stock company, or association, no matter how created or organized, not including partnerships; but it must be treated as a partnership for purposes of collecting of income taxes.

9. STATUTES ⟹245—TAXATION—CONSTRUCTION.
In the interpretation of statutes levying taxes, it is the established rule not to extend their provisions by implication beyond the clear import of the language used, or to enlarge their operations so as to embrace matters not specifically pointed out, and in case of doubt they are to be construed most strongly against the government.

10. INTERNAL REVENUE ⟹38—INCOME TAX—ILLEGAL EXACTIONS—RECOVERY—INTEREST.
Where a collector of internal revenue, acting under Income Tax Law Oct. 3, 1913, illegally collected taxes from a partnership composed of corporations, the members of the firm are entitled to recover the exaction, with interest and costs.

In Error to the District Court of the United States for the Territory of Hawaii; Horace W. Vaughan, Judge.

⟹For other cases see same topic & KEY-NUMBER in all Key-Numbered Digests & Indexes

Digitized by Google

Action by the Haiku Sugar Company, the Paia Plantation, the Kalialinui Plantation Company, Limited, the Pulehu Plantation Company, Limited, the Kula Plantation Company, Limited, the Makawao Plantation Company, Limited, and the Kailua Plantation Company, Limited, copartners doing business under the firm name of the Maui Agricultural Company, against Ralph S. Johnstone, executor under the will and of the estate of John F. Haley, late Collector of Internal Revenue for the District of the Territory of Hawaii. There was a judgment for defendant, and plaintiffs bring error. Reversed and remanded, with instructions.

Suit to recover certain moneys paid under protest in September, 1916, as income taxes under the federal Income Tax Law of October 3, 1913 (Act Oct. 3, 1913, c. 16, 38 Stat. 114). Demurrer to the complaint was sustained, and judgment went against the plaintiffs. The facts as alleged are: That the Maui Agricultural Company is made up of several corporations, each of which was incorporated under the laws of Hawaii; that the plaintiffs, since January, 1904, have been copartners under the firm name and style of Maui Agricultural Company, sugar growers of Hawaii; that the partnership has existed under an agreement of partnership, dated October 30, 1903, and adopted by-laws in 1904; that it was intended to be a general partnership, each partner a general partner therein, with unlimited liability upon each of the partners or members for the debts of the partnership; that by the laws of Hawaii (Session Laws of 1903, entitled "An Act Concerning Corporations," approved April 28, 1903; sections 2631 and 2632 of the Revised Laws of 1905; sections 3388 and 3389 of the Revised Laws of Hawaii of 1915) corporations in Hawaii are authorized to enter into general or special partnership with each other; that the general partnership was duly registered, pursuant to the registration law of Hawaii (chapter 28, Session Laws of Hawaii of 1880, re-enacted as chapter 162, Revised Laws of 1905, and chapter 189, Revised Laws of Hawaii, 1915); that under the provisions of the indenture of partnership the several partners or members have definite shares in the capital of the partnership, and that, while the by-laws provided that the respective interests of the partners or members shall be evidenced by a certificate, no stock or shares of stock or certificate of stock in the partnership or company has ever been issued, except as to certificates of the respective interests of the partners or members; that it never was intended that the partnership should have any capital stock, as distinguished from capital assets or working capital, nor has the capital of the partnership, or any share or interest therein, of any of the partners, ever had any par or face value; that it was never intended that the respective shares or interests of the partners in the capital assets of the company should be sold or transferred in any manner, whereby any assignee or transferee could succeed to the rights of the assignor or transferror to continue in the business of the partnership or to carry on the business with the other partners without their consent, and that the shares or interests of the partners in the partnership have never been divisible; that the capital assets consist mainly in the use during the existence of the partnership of the property and rights of the several partners which were contributed by them, respectively, to the partnership as required by the indenture of partnership, and are to revert to the respective partners or members upon the termination of the partnership or company; that the Maui Agricultural Company was never intended to be a corporation, joint-stock company, or association within the provisions of the Corporations Tax Law of August 5, 1909 (Act Aug. 5, 1909, c. 6, 36 Stat. 112), or within the meaning of the Income Tax Law of October 3, 1913; that the company as a partnership has made statements of profits to which its partners would be entitled after the same were divided, and given the names of the partners or members who would be entitled to the same, if distributed in compliance with the act of October 3, 1913, and particularly the fifth proviso of paragraph D of section II of the said act, and made statements to the revenue officials accordingly for the year 1914; that the plaintiffs,

Digitized by Google

members of the company, have been liable for corporation excise tax and income tax only in their several individual capacities, and have returned statements accordingly for taxes for the years previous to 1915, showing the respective shares of the profits of the company for the said years, and the profits to which each member would have been entitled if they had been divided; and plaintiffs say they were assessed accordingly and paid the assessment so made, but that in 1916 the revenue authorities took the position that the company was not subject to the special corporation excise tax under the act of August 5, 1909, but was subject to the income tax under the act of October 3, 1913, and that plaintiffs, members of the company, are severally subject to the corporation excise tax for 1909, 1910, 1911, and 1912, inclusive, and to the income tax for 1913, 1914, and 1915, inclusive, in respect to the shares distributed to and received by them, respectively, of the net income of the company in each of the said years, as distinguished from their respective shares in the net income of the company earned and distributed in each of the said years, whether distributed or not.

Smith, Warren & Whitney and Frear, Prosser, Anderson & Marx, all of Honolulu, T. H., for plaintiffs in error.

John W. Preston, U. S. Atty., and Caspar A. Ornbaun, Asst. U. S. Atty., both of San Francisco, Cal., and S. C. Huber, U. S. Atty., and J. J. Banks, Asst. U. S. Atty., both of Honolulu, T. H., for defendant in error.

Before GILBERT, ROSS, and HUNT, Circuit Judges.

HUNT, Circuit Judge (after stating the facts as above). [1-3] The question for decision is whether the Maui Agricultural Company is an organization excepted from the Income Tax Law of 1913, which, besides applying to persons, applies, subject to certain enumerated exceptions, to:

"Every corporation, joint-stock company or association, and every insurance company, organized in the United States, no matter how created or organized, not including partnerships."

It is clear, we think, that the company is not a legally created corporation. It was originally formed in 1903, solely by agreement of its members. The statute of Hawaii (section 1, act 51, Session Laws of Hawaii 1903) permitted any two or more corporations, organized under the laws of Hawaii, to enter into partnership with each other for the transaction of any lawful business; but a partnership formed of corporations is not in itself a corporation. The right given to a corporation to become a member of a partnership pertains to the power of the corporation to gain membership in a partnership, but does not make the aggregation of partners itself a corporation. There may yet be upon a corporation member the liability of a partner as to third persons. Butler v. Am. Toy Co., 46 Conn. 136; Bates on Partnership, § 1; Lindley on Partnership, p. 86. The partnerships into which corporations may enter in Hawaii are general and special. Chapter 70, § 1, Session Laws 1886. In the association in question there were no special partners, nor was there limited liability; nor, indeed, was any attempt made to form any but a general partnership. Strong evidence of this is the fact that the company registered as a general partnership under the law. Chapter 189, Revised Laws of Hawaii 1915.

Digitized by Google

In so far as intent may serve to determine the character of the agreement made between the parties, the theory of a partnership is reasonable. Fechteler v. Palm Bros. & Co., 133 Fed. 462, 66 C. C. A. 336. The provisions of the agreement are arranged with titles, for example, "Objects of Copartnership," "Term of Partnership," "Dissolution of Partnership," and the second recital of the "Indenture of Partnership" is that the parties "have mutually agreed each with the other to enter into partnership," while the first object stated is that the parties associate themselves together as partners under the firm name and style of the Maui Agricultural Company, and throughout the whole agreement the references are to the parties as partners and to the association as a partnership. After specifying the respective proportionate interest of the several partners, the agreement provides for sharing profits and losses as owners, and for the division in the same proportion of all surplus funds of the company when dissolution is had. Meehan v. Valentine, 145 U. S. 611, 12 Sup. Ct. 972, 36 L. Ed. 835.

But, notwithstanding the intent to form an ordinary partnership, must it be held that the legal effect of the language used by the parties has been to create a joint-stock company rather than a partnership? If it is such, then the lower court should be sustained, and taxation should be upon the income of such legally created joint-stock company. This is the pivotal point in the case, for in making distinction between joint-stock associations and partnerships Congress must have had in mind that there are substantial points of difference between such relationships. It is noticeable that the arrangement under examination lacks the element of changeability of membership or transferability of shares, an element often used as a determining criterion as between ordinary partnerships and joint-stock companies. Bates on Partnership, § 72. Nor has the agreement reference of any kind to indicate any purpose that the interests of members should be transferable; on the contrary, there are evidences of intent that the contract was solely between the parties thereto and no others. Hedge's Appeal, 63 Pa. 273. It is conceded that the provision for the management of the company by a board of managers is such as is frequently a characteristic of a joint-stock company, but this feature is not inconsistent with the right of partners to make their own arrangements for the management of the partnership affairs. If the right to form the ordinary partnership existed, it should follow that representatives of members of the partners could, for convenience, be selected to manage. McAlpine v. Millen, 104 Minn. 289, 116 N. W. 583; Fleming v. Lay, 109 Fed. 952, 48 C. C. A. 748. This would seem to be an inevitable result of the exercise of the right of a corporation to enter a partnership with another corporation.

We find, however, that in the present case the management of the concern is as much like that of an ordinary partnership as possible, considering the fact that the several members are corporations. The members of the board are not chosen at large by a majority vote of unit shares, but each member of the board is a special representative of the particular members of the partnership. To illustrate: It is provided in the by-laws (article IV) that the Haiku Company shall

Digitized by Google

appoint two managers, the Paia Company three, and the five other companies one jointly. These managers are to represent the respective partners by whom they are appointed, and a vacancy in the board is to be filled by appointment by the particular partner which "such manager represents." It is also provided in the by-laws (article VI) that a quorum at a meeting of the partnership is to consist of a majority of the partners, both in numbers and interest. The by-laws (article 16) also give to the stockholders of each of the corporate members, although not themselves partners, the same rights to inspect and examine the books and records of the partnership, and to investigate into the partnership affairs, as such stockholders have in the several corporate members in which they hold stock.

[4-8] In a joint-stock company the members have no right to decide what new members shall be admitted to the firm; on the other hand, the right of delectus personarum is an inherent quality of the ordinary partnership. Oak Ridge Coal Co. v. Rogers, 108 Pa. 147; Ashley v. Dowling, 203 Mass. 249, 89 N. E. 433. The provision for existence of the association for 45 years, "unless sooner terminated by the mutual consent of the parties hereto," does not show a plan for changeability in the membership. Karrick v. Hannaman, 168 U. S. 328, 18 Sup. Ct. 135, 42 L. Ed. 484. Dissolution would probably be effected through a transfer of any partner's interest, and there would be a liability for the breach, to be compensated in damages. Lindley on Partnership, *230, *231. A joint-stock company often consists of a large number of persons, between whom there is no special relationship of confidence; the retirement or death of a member works no dissolution; while a partnership, although it may consist of several persons, generally is made up of a few, who are drawn to each other by feelings of mutual confidence, and no member is at liberty to retire and substitute another as a partner. In a joint-stock company the business is generally managed by directors or other designated officers of the association, and a shareholder as such is without power to contract for the company; whereas, in a partnership any member may bind the partnership. Where a corporation is a partner, the doctrine of mutual agency may make business administration more intricate, but does not affect the legal question. Mallory v. Hanaur Oil Works, 86 Tenn. 598, 8 S. W. 396; News-Register Co. v. Rockingham Publishing Co., 118 Va. 140, 86 S. E. 874.

Stress is laid upon the provisions of the partnership agreement, wherein what is termed the "capital stock" is divided into 35 shares of interests. It is to be remembered, however, that the company had no nominal or fixed capital stock apart from the capital assets it owned—that is to say, there was no capital stock of a corporation or joint-stock company, divided, as is usually done in corporations or joint-stock companies, into nominal transferable shares of specified par value. When the agreement and by-laws are looked upon as a whole, the capital stock referred to is the capital or capital assets, and reference to the shares or interests is a method used to express the entire proportional indivisible interests of the seven named members of the partnership. These respective interests of the partners were different, as is shown by article II of the by-laws; and as already

Digitized by Google

indicated in another by-law (article IV), the managers are required to represent the partners in accordance with their respective interests. State v. Cheraw & Chester R. Co., 16 S. C. 524; Goodnow v. Am. Writing Paper Co., 73 N. J. Eq. 692, 69 Atl. 1014.

[9] In conclusion, while the case is not free from doubt, we think that its determination should be had in conformity with the intent of the several members of the association, and that by so resolving it we are accepting the latest expression of the Supreme Court, as announced in Gould v. Gould, 245 U. S. 151, 38 Sup. Ct. 53, 62 L. Ed. 211, where it was said:

"In the interpretation of statutes levying taxes it is the established rule not to extend their provisions by implication beyond the clear import of the language used, or to enlarge their operations so as to embrace matters not specifically pointed out. In case of doubt they are construed most strongly against the government, and in favor of the citizen."

[10] The judgment of the District Court must be reversed, and the cause remanded, with instructions to enter judgment for plaintiffs for the amount claimed, with interest and costs. Erskine v. Van Arsdale, 15 Wall. 75, 21 L. Ed. 63; Herold v. Shanley, 146 Fed. 20, 76 C. C. A. 478.

(249 Fed. 109)

TAYLOR v. WELLS FARGO & CO.

(Circuit Court of Appeals, Fifth Circuit. February 28, 1918. Rehearing Denied April 15, 1918.)

No. 3102.

1. CARRIERS ⟹4—"COMMON CARRIERS"—EXPRESS COMPANY.
An express company is a common carrier.
[Ed. Note.—For other definitions, see Words and Phrases, First and Second Series, Common Carrier.]

2. MASTER AND SERVANT ⟹100(1)—LIABILITY FOR INJURIES—EXEMPTION CONTRACTS—"COMMON CARRIER BY RAILROAD."
Within the federal Employers' Liability Act (Act April 22, 1908, c. 149, 35 Stat. 65 [Comp. St. 1916, §§ 8657–8665]), providing that every common carrier by railroad, engaged in interstate commerce, shall be liable to employés suffering injury, and in section 5 (section 8661) that any contract, etc., exempting from such liability shall be void, an express company is a common carrier by railroad, though it uses other facilities in its business; consequently an agreement between an express company and its messenger that neither the company, nor any railroad company on whose lines the messenger might travel, should be liable for any injury to him while so traveling, is invalid.

Appeal from the District Court of the United States for the Northern District of Mississippi; Henry C. Niles, Judge.

Suit by Wells Fargo & Co. against Oscar G. Taylor. From a decree for complainant, defendant appeals. Reversed and remanded, with directions to dismiss.

See, also, 220 Fed. 796, 136 C. C. A. 402.

⟹For other cases see same topic & KEY-NUMBER in all Key-Numbered Digests & Indexes

Digitized by Google

Thomas Fite Paine, of Aberdeen, Miss. (Paine & Paine, of Aberdeen, Miss., on the brief), for appellant.

E. O. Sykes, of Jackson, Miss. (E. O. & J. A. Sykes, of Aberdeen, Miss., and Branch P. Kerfoot, of New York City, on the brief), for appellee.

Before WALKER and BATTS, Circuit Judges, and EVANS, District Judge.

BATTS, Circuit Judge. A contract between the St. Louis & San Francisco Railroad Company and Wells Fargo & Co., providing for the operations of the express company over the lines of the railroad company, contained a provision to this effect:

The express company agrees "that it will and does hereby assume all risk and damage to its agents and employés while engaged in its business on any of the railways or property of the railroad company, and hereby agrees to indemnify and hold harmless the St. Louis & San Francisco Railroad Company on account for all claims for damages suffered by the agents and employés of the express company, while engaged in its business on any of the railways or property of the Railroad Company."

An instrument introduced in evidence, marked "Messengers' Agreement," and reciting that it was an agreement between Wells Fargo & Co. and Taylor, the plaintiff in error, but signed alone by the latter, contains a provision to the effect:

"That neither the party of the first part [Wells Fargo & Co.] nor any railroad or steamboat company, or other carrier, on whose lines said party of the second part may travel as such messenger or guard, shall, under any circumstances, or in any case whatever, be liable for any injury occurring to said party of the second part, while so traveling, whether such injury arises from any fault, carelessness, or negligence, gross or otherwise, on the part of said railroad or steamboat company, or other carrier, its agents or servants; it being the intent of this contract that said party of the second part shall and will assume all and every risk incident to said employment, from whatever cause arising."

Taylor, having been injured while discharging his duties as an express messenger, in an accident on the St. Louis & San Francisco Railroad, instituted suit against the railroad company in a state court of Mississippi. The express company filed a petition in that court, setting out the contracts, and asked to be made a party defendant, in order that it might remove the case to the federal court. The prayer of the petition was refused. It thereupon instituted a suit against appellant in the District Court of the United States, setting up the facts with reference to the agreements, and other facts, and, in addition to the prayer for general relief, asked for a temporary injunction, which was refused. The case in the state court proceeded to trial, resulting in a judgment for $4,000 for the plaintiff, which was affirmed by the Supreme Court of that state. Upon trial of the suit instituted by the express company a judgment was rendered for the company. An appeal to this court resulted in a reversal; the judgment being based upon the insufficiency of the pleadings. 220 Fed. 796, 136 C. C. A. 402. The bill was amended, and, upon a new trial, judgment was again for the express company, and the collection of the judgment

Digitized by Google

rendered in the state court was enjoined. From that judgment this appeal is taken.

Appellant contends that the former judgment in this court was final, and that this court, not having permitted an amendment, the bill could not be amended below; that the suit was in violation of section 720 of the Revised Statutes (Comp. St. 1916, § 1242); that the contracts between the express company and the express messenger, and between the express company and the railroad company, whereby the railroad company was to be relieved from the effect of negligence, were void; and that, by virtue of section 5 of the second Employers' Liability Act (35 Stat. 65, c. 149), and the amendment of April 5, 1910 (36 Stat. 291, c. 143), the contract between the express company and the appellant is void. If the last-mentioned contention of appellant is meritorious, it will not be necessary to consider the other questions.

[1, 2] The Employers' Liability Act provides:

"Every common carrier by railroad while engaging in commerce between any of the several states, * * * shall be liable in damages to any person suffering injury while he is employed by such carrier in such commerce. * * *" Section 1.

Section 5 provides that:

"Any contract, rule, regulation, or device whatsoever, the purpose or intent of which shall be to enable any common carrier to exempt itself from any liability created by this act, shall to that extent be void."

If the terms of the act apply to express companies, the contract between Wells Fargo & Co. and the messenger is void. Second Employers' Liability Cases, 223 U. S. 1, 32 Sup. Ct. 169, 56 L. Ed. 327, 38 L. R. A. (N. S.) 44; Phila., Balt. & Wash. R. R. v. Schubert, 224 U. S. 603, 32 Sup. Ct. 589, 56 L. Ed. 911.

An express company is a common carrier. Bank of Kentucky v. Adams Express Co., 93 U. S. 174, 23 L. Ed. 872. An express company is a common carrier by railroad. If this fact were not universally known, it would be sufficiently indicated by the contract between the appellee and the St. Louis & San Francisco Railroad Company. It is not seen how an insistence to the contrary can be made. Indeed, there is no contention that the express company is not a common carrier by railroad; but the proposition is that, notwithstanding the language, the act does not apply to express companies. The argument seems to be based upon rulings to the effect that the original Interstate Commerce Act (Act Feb. 4, 1887, c. 104, 24 Stat. 379) was not applicable to express companies, and upon the case of Robinson v. B. & O. R. R. Co., 237 U. S. 84, 35 Sup. Ct. 491, 59 L. Ed. 849, which holds that an employé of the Pullman Company is not an employé of the railroad company.

The Interstate Commerce Commission, in the Matter of the Express Cos., 1 Interst. Com. Com'n R. 349, held that the original Interstate Commerce Act was not intended to apply to express companies. The language of that act was to the effect:

"That the provisions of this act shall apply to any common carrier or carriers engaged in the transportation of passengers or property wholly by railroad, or partly by railroad and partly by water."

Digitized by Google

In reaching a conclusion that the express companies were not included an unconvincing argument was based upon the use of the word "wholly." The Commission says:

"The use of that word in the section which was evidently framed with the greatest care affords a fair foundation for the claim that the act does not describe the modes of transportation employed by express companies with sufficient precision to bring them within its terms."

The proposition which seems to have been most meritorious in reaching the conclusion was:

"That the details of the law in its various provisions are so framed as to apply distinctly to railroads and railroad companies, and that they do not apply to the carriage of property by express companies without various implications and eliminations which give a somewhat strained construction to the language used."

A number of examples are then given in support of this proposition. The Commission finally suggests:

"In case of doubtful jurisdiction, it is far better that the legislative body should resolve the doubt."

This holding of the Interstate Commerce Commission was not more than acquiesced in by the courts. Am. Ex. Co. v. U. S., 212 U. S. 522, 29 Sup. Ct. 315, 53 L. Ed. 635. It is to be observed that the language of the act which was under construction is very different from that employed in the Employers' Liability Act. Even if the processes of reasoning were entitled to greater respect, the decision would not be held applicable to the present case.

Robinson v. Baltimore & Ohio R. R. Co., is cited by appellee as decisive of the proposition that the Employers' Liability Act does not apply to an express company and its employés. That was a suit instituted by a Pullman porter, injured while performing his duties, against the railroad company. The Supreme Court says:

"The inquiry is whether the plaintiff comes within the statutory description; that is, whether, upon the facts disclosed in the record, it can be said that, within the sense of the act, the plaintiff was an employé of the railroad company, or whether he is not to be regarded as outside that description, being in truth on the train simply in the character of the servant of another master, by whom he was hired, directed, and paid, and at whose will he was to be continued in service or discharged."

The court continues:

"We are of the opinion that Congress used the words 'employé' and 'employed' in the statute in their natural sense, and intended to describe the conventional relation of employer and employé."

And it concludes:

"We conclude that the plaintiff in error was not an employé of the defendant company within the meaning of the Employers' Liability Act, and that the judgment must be affirmed."

A ruling that a porter, hired by the Pullman Company, is not a railroad company employé, is not conclusive that a messenger, hired by an express company, is not an express company employé.

It would not be difficult to make a fairly satisfactory argument to the effect that an express messenger is an employé both of the ex-

Digitized by Google

press company and of the railroad company. In the case of B. & O. R. R. Co. v. Voigt, 176 U. S. 498, 20 Sup. Ct. 385, 44 L. Ed. 560 (decided before the passage of the Employers' Liability Acts), recovery was refused an employé of the express company, in a suit against the railroad company; the court in argument suggesting that the relation between the express company and the express messenger more nearly resembled that of an employé than a passenger, since "his position is one created by an agreement between the express company and the railroad company, adjusting the terms of a joint business," and that the express messenger could not recover for the negligence of a fellow servant.

The relations between an express company and a railroad company have the elements of a partnership, of agency, of a common enterprise. Oliver v. Northern Pac. R. R. Co. (D. C.) 196 Fed. 432. It is not necessary, however, to determine whether appellant could have recovery against the railroad company under the act or otherwise. The issue necessary to be determined is whether the fifth section of the Employers' Liability Act renders void so much of the contract between the messenger and the express company as undertakes to negative the right of the messenger to recover for injuries. This answer is dependent upon whether the act applies to express companies. The language of the act does not seem to leave any ground for construction or interpretation. It is perfectly clear and absolutely unequivocal. The terms of the act apply to every common carrier by railroad. The circumstance that the common carrier may also conduct a business other than by railroad cannot destroy the fact that it conducts a common carrier's business by railroad. If the fact that an express company may also be a common carrier by water, or by stage, could destroy the applicability of the act, railroad companies that utilize water transportation would also be exempt.

The transportation which is conducted on a railroad by an express company is properly within the function of the railroad. All of the handling of freight by express companies could be by railroad companies, and shippers could compel the acceptance by railroad companies of such freight. The arrangement between railroad companies and express companies, by which they co-operate in handling part of the freight which railroad companies are compelled to carry, is regarded as legal. There would be nothing to prevent a railroad company from making somewhat similar arrangements with express companies or freight lines, by which the balance of its freight might be handled by intermediary transportation companies. It could, doubtless, in the same way farm out its passenger transportation business. The exercise, with regard to the balance of its business, of the rights which it has exercised with reference to that portion of it which has gone to the express companies, would dispense with a very large per cent. of all of the direct employés of the railroad company. The arrangement would, in very large measure, nullify the Employers' Liability Act, if it is limited in its application as contended by appellee.

It was the purpose of the Congress to provide special protection to persons subject to the hazards incident to the operation of railroads. There could have been no reason for giving the protection to a rail-

Digitized by Google

road conductor, and refusing it to an express messenger. It will not be assumed that Congress intended to make a distinction in the absence of language that would so indicate. It will certainly not be assumed in the face of language which is clear and unambiguous. Those of the decisions which seem to sustain the right of a railroad company and an express company, between them, to contract away the right of a human being to protection against negligence, are entirely out of harmony with fundamental principles of right and the ordinary conceptions of law. No court ought at this time, in the face of the unequivocal language of the Congress, to make a ruling which would differentiate express company messengers, not alone from other persons engaged in the hazards of railroading, but from all other persons engaged in hazardous businesses. The Employers' Liability Act is proof that Congress was not unresponsive to the universal feeling that every business should carry its hazards. It will not be assumed that language, which is properly and logically comprehensive, is to be so construed as to exclude a class dependent on legislation even for protection against negligence.

Appellant is not seeking relief under the terms of the Employers' Liability Act, but he is insisting that that part of the contract which the express company claims deprived him of all protection is void. We so hold. The judgment of the lower court is reversed, and the cause remanded, with directions to dismiss.

Reversed.

(249 Fed. 114)

STOKES v. WILLIAMS et al.

(Circuit Court of Appeals, Third Circuit. February 27, 1918.)

No. 2298.

1. RECEIVERS ⟹170—ACTIONS AGAINST—DEFENSES—LIMITATION.

While it is the general rule that the defense of the statute of limitations, though personal to a corporation, passes to its receivers, such rule is based in principle on the fact that the receivers represent the interests of the corporation, its stockholders, and creditors, and succeed to the defense for the protection of those interests; and where by reason of peculiar circumstances the receivers do not represent such interests, the rule does not apply.

2. RECEIVERS ⟹170—ACTIONS AGAINST—DEFENSES—LIMITATION.

A committee of creditors purchased from receivers the property of a corporation, except its credits and cash, for a sum represented as more than sufficient, with the assets retained, to pay all the debts of the corporation. The purchase, however, was subject to the condition that any surplus remaining after such payment should be returned to the committee. *Held* that, assuming that the assets so secured were sufficient to pay all the corporation's debts, the receivers could not set up the defense of limitation to an otherwise valid claim against the corporation, since such defense was not for the protection of the corporation or its property, but solely for the benefit of the purchasing committee.

3. LIMITATION OF ACTIONS ⟹148(4)—ACKNOWLEDGMENT OR NEW PROMISE—SUFFICIENCY.

The statute of limitations of New Jersey (3 Comp. St. N. J. 1910, p. 3167, § 10) provides that "no acknowledgment or promise by words only

---

⟹For other cases see same topic & KEY-NUMBER in all Key-Numbered Digests & Indexes

Digitized by Google

shall be deemed sufficient evidence of a new or continuing contract whereby to take any case out of the operation of this act * * * unless such acknowledgment or promise shall be made or continued by or in some writing to be signed by the party chargeable thereby." A corporation declared a dividend on its preferred stock, which was paid to all stockholders, except claimant. A year later the corporation wrote claimant a letter as follows: "The executive committee took up the question of payment to you of the dividend on the preferred stock, and decided that, owing to the present money conditions, it would be unwise, from the company's standpoint, to make any payment at this time." *Held*, that such letter was an unqualified acknowledgment of an antecedent indebtedness, and that such acknowledgment carried with it by implication a promise to pay which was sufficient to raise the bar of the statute.

Appeal from the District Court of the United States for the District of New Jersey; Thos. G. Haight, Judge.

Appeal in equity by William E. D. Stokes from an order disallowing his claim against the Standard Plunger Elevator Company, Howard H. Williams and Albert C. Wall, as receivers, and others. Reversed.

Charles L. Craig, of New York City, for appellant.

Howard H. Williams, of New York City, and Albert C. Wall, of Jersey City, N. J., for appellees.

Before McPHERSON and WOOLLEY, Circuit Judges.

WOOLLEY, Circuit Judge. The claimant filed two claims against the defendant corporation. The receivers rejected both as barred by the Statute of Limitations of New Jersey. On exceptions, the District Court referred the question of allowance to a master. He sustained the receivers. On exceptions again, the District Court affirmed the master, and the claimant took this appeal.

[1] *Claim 1.* The first claim is for $9,258.15, and is not disputed. As the indebtedness is more than six years overdue and is not revived by a written acknowledgment or promise to pay, it is conceded that the claim is barred by the New Jersey statute if the defence of the statute of limitations is available to the receivers in this case. The learned trial judge held that a receiver succeeds to all defences of the corporation, and, accordingly, the defence of the statute of limitations was here available to the receivers and barred recovery on the claim.

But the facts of this case are peculiar, and give the question a turn, which requires, we think, something more than a consideration in the abstract of what defences are available to receivers. We do not question the general rule that the defence of the statute of limitations, though personal to a corporation, passes to its receivers, and is available to them in caring for and protecting the interests of the corporation, its stockholders, and creditors. In fact, we freely recognize the rule; but in doing so we recognize also that the rule is based in principle on the protection which the law intends to afford those whom the receivers represent. Whom do the receivers represent in this case? It is on the answer to this question that the peculiarity of the facts of this case has a bearing.

[2] A conflict between stockholders of the Standard Plunger Elevator Company, which had long been waged, culminated in the ap-

Digitized by Google

pointment of receivers and an order for the sale of its property. The validity of the order and subsequent sale was the subject of litigation previously in this court. Stokes et al. v. Williams et al., 226 Fed. 148, 141 C. C. A. 146.

The corporation's assets were of a character that did not invite extensive bidding. A committee of creditors, composing or representing one faction of stockholders in the corporation controversy, offered to purchase all assets of the corporation, excepting its accounts and bills receivable and cash, for the sum of $250,000. The proposed purchase price and the assets to be retained, it was represented, together amounted to a sum exceeding all the corporation's debts. This offer was opposed by creditors and stockholders of the corporation comprising the other faction to the controversy; but, as they had nothing better to offer, the court ordered the sale on the offer made. At the sale, the committee purchased the corporation's property pursuant to its offer, and the sale was confirmed. 226 Fed. 148, 141 C. C. A. 146.

So far, there was nothing very unusual in the transaction; but the committee's bid, on which the sale was ordered, contained a peculiar feature, which has, we think, a controlling bearing on the question now before us. This was a provision or rather a condition, that any excess of the purchase price over and above the claims approved and allowed, should be returned to the purchasing committee. Assuming as we do the correctness of the representation that the purchase price when added to the assets retained will more than pay all the corporation's debts (that being the representation which induced the court to order the sale, and afterward to confirm it), the net results of the sale made upon the offer containing this drawback, are, first, that there will be money enough to pay all creditors in full; second, that no money whatever will be paid stockholders; and, third, that some part of the purchase price will be returned to the committee.

As these facts make the case, we must find the person, natural or artificial, for whom the receivers were acting when they rejected the claim on the statute of limitations.

Manifestly, they were not acting for the corporation's stockholders, because the receivership funds could not under the terms of purchase reach them in any event. They were not acting for the corporation's creditors, because they had already been protected by the size of the purchase price. Were they acting then for the corporation in its purely impersonal artificial sense? The allowance or disallowance of the claim was a matter of entire indifference to the corporation. Its allowance would take nothing from the corporation; it would simply diminish the balance of the purchase price to be returned to the committee. Its disallowance would add nothing to the funds of the corporation, its stockholders, or creditors; it would simply increase the balance of the purchase price to be returned to the committee.

If the claim had been asserted against the corporation before receivership, the corporation's property would have been liable for the payment of its debt. This liability, the corporation could have protected of course by the defence of the statute of limitations. But the defence as here pleaded on the claim filed against the receivers, is not

Digitized by Google

for the protection of the corporation's property but is for the protection of the committee's property as represented by the balance to be returned to it. When the corporation ceased to be liable to respond with its property for the payment of its debt, it ceased to be entitled to the defence of the statute. It occurs to us that a defence which is purely personal to the corporation and is afforded it solely for the protection of its property cannot pass to its receivers to be employed by them for the protection of the property of another. That the defence if sustained will inure solely to the protection of the committee is clear. Then it must be that the receivers pleaded the statute for the committee. If so, then certainly, a defence which the law affords the corporation cannot be pleaded for a person or a body of persons that has not in any sense succeeded to the corporation or to any of its rights, and has no relation to the corporation other than that of purchaser of its assets.

We are of opinion, that, under the facts of this case, the plea of the statute of limitations is not available to the receivers in defending the claim in question, unless, indeed, the allowance of the claim, in consequence of the withdrawal of the defence of the statute, should so diminish the fund that all other creditors would not receive payment of their claims in full, in conformity with the representation upon which the bid of the committee was made and accepted and upon which the sale was ordered and confirmed. In such an event, we hold the defence would be available to the receivers to the extent necessary to protect the corporation's liability and to conserve the funds in the hands of the receivers to the payment in full of the corporation's debts, but not to protect any balance payable to the purchasing committee under the rebate provision of its bid.

[3] *Claim 2.* The second claim is for an unpaid dividend amounting to $3,666. This claim went through the same legal procedure as the first and was ultimately rejected on several grounds, of which we think, but two are substantial enough to require mention, and of these, but one calls for discussion. We believe there is no difference between this claim and the first in the reasoning by which we have held that the defence of the statute of limitations is not available to the receivers, yet we prefer to decide the appeal on the question upon which it was argued and decided below. This involves the interpretation of a letter written by the defendant corporation and offered as evidence of a new promise to remove the bar of the Statute of Limitations of New Jersey, and to satisfy the requirements of the statute, that, "no acknowledgment or promise by words only, shall be deemed sufficient evidence of a new or continuing contract, whereby to take any case out of the operation of this act, or to deprive any person of the benefit thereof, unless such acknowledgment or promise shall be made or continued by or in some writing to be signed by the party chargeable thereby." 3 Comp. St. 1910, p. 3167, § 10. Parker v. Butterworth, 46 N. J. Law, 244, 245, 50 Am. Rep. 407; Hewes v. Hurff, 69 N. J. Law, 263, 55 Atl. 275.

The letter offered as a distinct and unqualified acknowledgment of the existing obligation bears date April 30, 1908, and is as follows:

Digitized by Google

"The Executive Committee took up the question of payment to you of the dividend on the preferred stock and decided that owing to the present money conditions, it would be unwise, from the company's standpoint, to make any payment at this time."

This letter calls for construction, but construction in the light of facts that are not disputed. These are: (1) That a dividend was declared on May 1, 1907; (2) that the dividend was paid, directly or indirectly, to all stockholders excepting to the claimant; (3) that the claimant's share in the dividend was not paid him; and, (4) that by the declaration of the dividend, the corporation became indebted to the claimant. In this state of facts the letter was written. While the master conceded that the dividend referred to in the letter was the dividend that had previously been declared, the court rather regarded the dividend mentioned in the letter as a dividend yet to be declared, both, agreeing, however, that the writing did not constitute an unqualified acknowledgement of the debt, implying an unconditional promise to pay it, within the meaning of the New Jersey cases.

We can readily dispose of any question as to whether the promise, if one is implied, was conditional or unconditional, because, if unconditional, it is sufficient, and if conditional, the evidence shows the happening of the event upon which the condition was made.

As we read the writing, we do not gather the impression that the writer was speaking of the inadvisability of *declaring* a dividend, for language naturally to be employed to convey the meaning of future action would be very different from that actually used. What the writer said was, that the committee had taken up the question "of *payment* * * * of *the* dividend on the *preferred stock*" (which is *the stock* on which *a* dividend *had been declared* and which had not been *paid* to the addressee of the letter), and had taken up also the question of "payment *to you* of the dividend," not of the *declaration* of a dividend to stockholders generally. The conclusion of the paragraph, in which the writer refers to the unwisdom, in "the *present money conditions* * * * to make any *payment at this time*," does not suggest the idea that payment was declined, nor does it negative the idea that payment would be made at some time. While the writing is of a character that admits of diverse interpretations, our construction is that it relates to an antecedent debt, that it unqualifiedly acknowledges the existence of the debt, and that the acknowledgment embodies the implication of a promise to pay.

We are of opinion, therefore, that the writing raises the bar of the statute of limitations and allows the claimant to prosecute his claim.

We direct that the order of the court be reversed and the claimant be allowed to proceed with proof of his two claims in conformity with this opinion.

Digitized by Google

(249 Fed. 119)

CLINTON v. SMITH & TERRY, Inc.

SMITH & TERRY, Inc., v. EBNER.

(Circuit Court of Appeals, Fourth Circuit. January 25, 1918.)

Nos. 1572, 1573.

1. MARITIME LIENS ⟹9—CHARTERS—LIEN—CLAIM FOR DEAD FREIGHT.
A claim of a charterer for dead freight, which is in the nature of one for loss of profits, is not enforceable in a suit in rem as a lien on the vessel.

2. TOWAGE ⟹9—TOWAGE SERVICE—BREACH OF EXECUTORY CONTRACT—LIEN.
That a charterer accepted delivery of a barge at a point distant from the place of loading, and had her towed there, did not make such transfer the beginning of a voyage under the charter, and the unaccepted offer of services by tugs before she was ready to proceed on her voyage did not give them a lien on the barge.

3. ADMIRALTY ⟹66—PLEADING—AMENDMENT OF LIBEL.
The allowance of an amendment of the libel in a suit in personam, setting up an additional claim for damages growing out of the same alleged breach of charter, *held* within the discretion of the court.

4. SHIPPING ⟹58(3)—CHARTER—DAMAGES FOR BREACH.
Where the charterer of a coal barge for three months, with the privilege of renewal for another like term, surrendered the barge during the first term for unseaworthiness, and did not exercise its option for renewal, it could not recover in a suit for breach of charter for loss of prospective profits during the renewal term.

Cross-Appeals from the District Court of the United States for the Eastern District of Virginia, at Norfolk; Edmund Waddill, Jr., Judge.

Suits in admiralty by Smith & Terry, Incorporated, against the barge Benefactor, John Ebner, master and claimant, and by Smith & Terry, Incorporated, against Joseph F. Clinton. Decree for libelant in the first suit, from which it appeals. Affirmed. From the decree in the second suit, both parties appeal. Modified and affirmed.

For opinion below, see 242 Fed. 582.

Francis S. Laws, of Philadelphia, Pa., and John W. Oast, Jr., of Norfolk, Va. (Lewis, Adler & Laws, of Philadelphia, Pa., on the brief), for Clinton and Ebner.

Edward R. Baird, Jr., of Norfolk, Va. (Baird & Swink, of Norfolk, Va., on the brief), for Smith & Terry, Inc.

Before PRITCHARD, KNAPP, and WOODS, Circuit Judges.

KNAPP, Circuit Judge. These cases were argued together and may be disposed of in one opinion. The following facts appear:

Smith & Terry, Incorporated, chartered the barge Benefactor for three months from December 13, 1915, with the option of three additional months, to carry coal from Hampton Roads to Sound ports. After one load had been taken from Newport News to Providence, the charterer canceled the contract and returned the barge to her owner on the ground that she was unseaworthy. Subsequently the charterer brought two actions in admiralty, one a libel in rem against

Digitized by Google

the barge, and the other a libel in personam against the owner. In the in rem proceeding five items of damage were set up for which a lien was claimed, namely: (1) Cost of towing the barge from Providence to New York; (2) loss of time of a tug, which went to take the barge in tow at Hampton Roads before she was ready to go to sea; (3) loss of time of another tug, which also went to take her out before she was ready; (4) loss of profits on the difference between the number of tons which the barge carried on the trip mentioned and the number of tons which it is claimed she should have carried; and (5) loss of profits on the earnings of the barge for the three additional trips it is claimed she could have made, if seaworthy, within the first three-months period. The answers of the owner deny that the barge was unseaworthy and by way of cross-bill ask to recover the amount agreed to be paid for her use. Upon objections filed in the first action, the court below struck out the item of damage for loss of profits which the barge would have earned, if seaworthy, on the ground that it was not a lien on the barge. The other items were permitted to stand. The trial court, also, against the objection of the owner, permitted an amendment of the in personam libel, by which the item of loss of profits stricken from the in rem proceeding was inserted in the in personam proceeding. The cases were tried together, though not consolidated.

[1] Upon the evidence adduced the court below found as a fact that the barge was unseaworthy. It is enough to say that this finding is supported by adequate proof, and that no sufficient reason appears why it should not be accepted. In the in rem case the item for towing the barge from Providence to New York was allowed, and the correctness of that ruling is not challenged by assignment of error. The two items for loss of time by the tugs which went to take the barge in tow and found her not ready were disallowed, and that ruling will be presently considered. The "dead freight" item was likewise disallowed, because the court found that the number of tons carried by the barge on the trip she made was as great as she could reasonably carry. This finding also has the support of substantial evidence and should be accepted. Even if the fact were found otherwise we should feel constrained to hold that this item of damage, which is in the nature of prospective profits, is not sustainable as a lien on the barge. In the in personam case, and under the amended libel, the court awarded libelant the sum of $3,351.50 for profits which the barge, if seaworthy, would have earned during the first three months, but disallowed the claim for profits that would have been earned during the second three months. Both parties appeal.

[2] The libelant's claim of lien for the hire of tugs which offered to tow the barge before she was ready to go to sea is based on the contention that the service for which she was engaged had then been in some part performed, and therefore the contract was not wholly executory; this because the barge was delivered to the charterer at Philadelphia, and had to be moved from there to Lambert's Point to take on a cargo of coal. But the circumstance that the barge when hired was at a distance from the intended place of loading did not serve to make her transfer to that place the beginning of a voyage,

Digitized by Google

or a partial performance of her undertaking. It was only the incident of her location when the charter party was signed. This being so, the unaccepted proffer of service by the tugs did not give them a lien on the barge, whatever claim they might have against the person that employed them. And if the tugs had no lien for mere loss of time, without any actual service, it seems manifest that libelant cannot recover for that loss in an in rem proceeding. We are of opinion that the two items in question were properly disallowed. The Francesco (D. C.) 116 Fed. 83; The Thomas P. Sheldon, 118 Fed. 952, 55 C. C. A. 439; The Rupert City (D. C.) 213 Fed. 263.

[3] It is insisted that the trial court erred in allowing the in personam libel to be amended in the manner above recited, but the argument is unconvincing. In our judgment this amendment did not introduce a new and independent cause of action, for the reason that both claims for loss of profits, one for the agreed three months and the other for the optional three months, grew out of the same alleged breach of the charter party, namely, in that the barge proved to be unseaworthy. It seems evident that the first of these claims, as well as the second, might have been set up in the original libel, since it was the proper subject of an in personam proceeding. As the matter stood, therefore, we do not perceive that the amendment operated in any wise to the prejudice of the owner, and the surety is not objecting. Moreover, the answer in this proceeding, which serves also as a cross-libel, seeks recovery from libelant for the stipulated hire of the barge and certain expenses incurred in putting her in repair. In short, we are satisfied that the allowance of the amendment was within the discretionary power of the court below and should not be held erroneous.

It was found by the trial court that the barge, if seaworthy, could have made three additional trips during the three months for which she was chartered. There was testimony to that effect, although the fact was in dispute, and we cannot say that the finding is unwarranted. It will therefore be assumed to be correct. The damages awarded for loss of profits were on the basis of $2.50 per ton of coal, that being the rate at which the barge was subchartered by libelant to another concern. This subcharter was entered into without the knowledge or consent of the owner, and consequently its terms were not binding upon him. Obviously, the charterer cannot recover from the owner, for the breach of his contract, any more than it was to get from the subcharterer, since that in any event would be the extent of its loss; and it cannot recover as much as the subcharterer was to pay, if when the breach occurred it could have hired another barge or procured equivalent tonnage at a lower rate. On conflicting testimony relating to this question, the trial court found in effect that the charterer could have obtained cargoes at an average of not less than $2.50 per ton during the three months for which the barge was hired. Accepting this finding, which seems to be justified, we cannot see that it was unfair to the owner or otherwise incorrect to assess damages on that basis.

But the amount awarded appears plainly excessive, because it assumes that the barge would have carried 1,350 tons on each of the

Digitized by Google

three additional trips she might have made during the three months in question, whereas the court has found, and we uphold the finding, that 1,200 tons was as much as she could safely carry. The estimate is therefore too great by 450 tons, which at $2.50 per ton would amount to $1,125, and the award must be reduced accordingly.

[4] We are of opinion that the trial court was right in rejecting libelant's claim for prospective profits during the optional three months. In point of fact, the option was not exercised by notice to the owner or by any act indicating a desire to retain the barge after the first three months. Moreover, in our judgment, the cancellation of the charter party and return of the barge were in the circumstances tantamount to a declaration that the option would not be exercised, and no further comment seems to be necessary.

It follows that the decree in the in rem case should be affirmed, with costs. The decree in the in personam case should be modified, by deducting from the award of damages, the sum of $1,125, with interest from April 24, 1917, and, as thus modified, affirmed, but without costs to either party as against the other.

(249 Fed. 122)

ATLANTIC COAST LINE R. CO. v. SELDEN.*

(Circuit Court of Appeals, Fourth Circuit. January 19, 1918.)

No. 1559.

MASTER AND SERVANT ⟹278(18)—ACTION FOR INJURY TO SERVANT—SUFFICIENCY OF EVIDENCE.

A verdict finding a railroad company chargeable with negligence and liable for the death of a switchman, who was struck by a train moving backward at night on the main track through the yard, *held* not supported by the evidence under the instructions of the court, although plaintiff was entitled to more favorable instructions.

In Error to the District Court of the United States for the Eastern District of Virginia, at Richmond; Edmund Waddill, Jr., Judge.

Action at law by Jennie C. Selden, administratrix of John R. Selden, deceased, against the Atlantic Coast Line Railroad Company. Judgment for plaintiff, and defendant brings error. Reversed.

Edwin P. Cox, of Richmond, Va., and Bernard Mann, of Petersburg, Va., for plaintiff in error

Brockenbrough Lamb, of Richmond, Va. (Keith & Hurt and Lamb & Lamb, all of Richmond, Va., on the brief), for defendant in error.

Before PRITCHARD and WOODS, Circuit Judges, and CONNOR, District Judge.

PRITCHARD, Circuit Judge. This action was instituted in the District Court of the United States for the Eastern District of Virginia by defendant in error, administratrix of her deceased husband, against the Atlantic Coast Line Railroad Company, plaintiff in error, to recover damages for the death of her husband. The deceased was employed by the Atlantic Coast Line Railroad Company as a yard

---

⟹For other cases see same topic & KEY-NUMBER in all Key-Numbered Digests & Indexes

*Rehearing denied May 8, 1918.

Digitized by Google

switchman, and was killed while performing his duties as such on the company's yard, which is known as "the South Richmond yard." This action was instituted under what is known as the federal Employers' Liability Act (Act April 22, 1908, c. 149, 35 Stat. 65 [Comp. St. 1916, §§ 8657–8665]), and it is conceded that the act in question applies to the case at bar.

The company's main line runs from Byrd Street station, on the north side of the James river, in the city of Richmond, Va., in a southwesterly direction over a bridge across the river, and then turns and proceeds in a southerly direction. The South Richmond yard is located on the south side of the river, a short distance beyond the end of this bridge, and through this yard the main track runs in a sharp curve, upon the inside of which and close to the main line is an embankment more than 30 feet high. There is but one track, called for convenience the storage track, between the main line and this embankment. On the other side of the main line track, (on the outside, or convex, of the curve) there are 12 tracks, all of which run upon approximately the same curve, parallel to the main track, which tracks are in the yard. The limits of this yard may be roughly said to be a footbridge over the tracks at the northern end, and Semmes avenue bridge, which carries Semmes avenue and the street car tracks over the railroad, at the southern end. North of this footbridge the railroad is a single track to Byrd Street station, and south of Semmes avenue bridge there are 3 tracks for a distance of some miles. The distance from Semmes avenue bridge to the footbridge is 976 feet.

It appears that at the time deceased was killed he was engaged in shifting a train of cars which were moving in a southerly direction on the track next to and just west of the main line track, viz., the first track on the outer side of the curve formed by the main line track; that the cars with which the deceased was engaged were running on track No. 5. It further appears that deceased was temporarily in charge of this operation; the regular conductor having gone a few moments before to the yard office for orders. The duties of the deceased required him to be on the inner side of this train, the main line side, in order for his signals to be properly transmitted. The locomotive had been attached to the cars on the track No. 5—had been coupled to them by the deceased—and they had begun to move in a southerly direction out of track No. 5, and as soon as this movement began deceased walked northwardly, as plaintiff contends, along the main line track for the purpose of noting the chalk marks on the cars, in order that they might be switched to their proper locations. It is also insisted that the deceased, for his own protection, walked in the middle of the main line track; that the space between the main line track and No. 5 was not a safe place to walk, because of the danger of swinging doors and projections on the cars on track No. 5, as well as the danger from the roughness and unevenness of the ground and the projection of exposed tie ends, all of which rendered the main line track the safest place for him to walk.

It is insisted that while thus engaged with the cars on track No. 5 deceased was, without warning, struck and killed by a train of 34

Digitized by Google

cars which approached him from the rear on the main line; that the train which struck him was coming northwardly towards Richmond, and that the same was being pushed by a locomotive from the rear around this curve and embankment. It appears that there was no light upon the leading box car, and it is contended that no warning of any kind was given of the approach of the train. It also appears that owing to the method of running this train the engineer was about 1,400 feet from the leading car, and therefore had no view whatever of the track ahead of his train; such view as he might have had being entirely cut off by the curve in the embankment.

It further appears that this north-bound train was in charge of Conductor Jones, who was standing on the top of the leading box car, about midway thereof. It is admitted that it was the duty of Jones to keep a lookout on the track, and to warn employés in danger of being struck by this train, and to relay to the engineer such signals as might be required. On account of the length of the train, the signals had to be relayed from the conductor on the leading box car to a brakeman about the middle of the train, who in turn repeated the signals to another brakeman near the locomotive, who repeated them to the engineer.

As the leading car of this north-bound train entered the yard under Semmes avenue bridge, the conductor was able to see and did see a signal light a considerable distance north of the footbridge, and this signal light indicated a clear track and gave him his clearance through to Richmond. When this signal was seen, the leading car was not less than 650 feet south of the point where deceased was struck. The only duty that Conductor Jones had to perform while his train was running this distance, as shown by his own testimony, was to look out for and warn with his voice employés engaged in the yard and in danger of being struck by his train. A great number of employés were customarily at work on this yard at night, passing to and fro across and along the main track.

The deceased was run down and killed, and the noise of the breaking of his lantern was the only thing that gave warning of the accident to the colored brakeman, John Montgomery, who was engaged with Capt. Selden's crew and was walking northwardly along the main line some distance north of Capt. Selden. The noise of the breaking glass attracted the attention of Montgomery, who testified that he looked around and saw the silent, unlighted bulk of the leading car bearing down upon him out of the darkness, and that he barely escaped with his life by jumping from the main line track.

Conductor Jones, a witness for the plaintiff, who, as we have stated, was standing near the center of the leading car, said that when he "got his signal to proceed he gave the signal to go ahead to the man in the middle of the cut of cars on which he was, so that that man could give it to the man next to the engine, and that after he gave the signal he was standing in the same position on the car, looking straight ahead, and that he did not see anything on the track."

A number of witnesses were introduced, but we think that this statement covers the facts material to the question before us, in view of the charge of the court below. The jury found a verdict in favor

Digitized by Google

of the plaintiff, and judgment was entered accordingly, to which defendant excepted. The case now comes here on writ of error.

The court below, among other things, gave the following instruction:

"(6) The court instructs the jury they cannot find a verdict for the plaintiff in this case, unless it has been shown to their satisfaction by the greater weight of evidence that Mr. Selden was, at the time of the accident, walking on the main line track, and not between the track and No. 5, and that Conductor Jones saw and knew that he was in a position of danger, or by the exercise of ordinary care and caution ought to have seen him on said track, and to have known that he was in a position of danger, and that after he had such knowledge or opportunity of knowledge there was sufficient time for the defendant company, acting through its train crew on the cut of cars going north, to have prevented the accident."

In granting this instruction the court excluded all other theories involved in this case, only submitting to the jury the issue whether Conductor Jones had an opportunity to see Selden's danger and warn him of the approaching train; the negligence of Selden being assumed. Therefore, in determining the point involved, we must confine ourselves to the evidence which relates to the question as to whether the defendant company complied with the rule or custom which requires that in making a yard movement a conductor or other person assigned to that duty should stand at the center of the leading car with a lantern to warn those who might be on the track of the approaching train.

Conductor Jones, whose evidence was not contradicted, stated, among other things, that he was on the car at the proper place and that his lantern was in good condition, which afforded him an opportunity to have a clear view of the track in front of the moving train, and that he did not see deceased until after the accident occurred. This witness also testified that this was a custom of long standing in the operation of trains in the vicinity where the accident occurred; that plaintiff's decedent had, on many occasions, performed the same service and in precisely the same manner. Other witnesses corroborated the testimony of Conductor Jones as respects this point. Indeed, a careful search of the record fails to disclose any evidence tending to show that Jones was in any way negligent in performing the duty required of him. Under these circumstances we fail to see how the jury, restricted as it was by the instructions submitted, could have found that decedent's death was due to the negligence of the defendant or any of its employés.

However, we think that the proof shows that the movement in question was a main line movement. It appears from the evidence that the rules of the defendant company, among other things, provide:

"Rule 24. When cars are pushed by an engine (except when shifting or making up trains in yards) a white light must be displayed on the front of the leading car by night."

This rule is eminently proper, providing as it does that when cars are being pushed by an engine that a white light must be displayed on the front of the leading car as a warning of its approach. When trains are operated in the regular way, the engine precedes the cars

Digitized by Google

and is equipped with a powerful light, which serves a two-fold purpose, to wit: (1) To enable the engineer at all times to have a clear view of the tracks in front of him; and (2) to indicate to those who may be on or about the tracks the approach of the train, but in this instance, as we have stated, the train was being pushed backwards and going at a rate of speed which did not create much noise, and there being no light on the end of the leading car rendered this method of operation exceedingly hazardous to those who might be walking upon the main line track.

In view of this phase of the case, the plaintiff was entitled, if he had so requested, to have the jury pass upon the question as to whether the defendant company was guilty of negligence in operating a train on the main line without placing a light on the front of the leading car, subject to the defense of assumption of risk.

From what we have said, it follows that the judgment of the court below should be reversed, and the cause remanded, with instructions to proceed in accordance with the views expressed herein.

Reversed.

(249 Fed. 126)

THE BARON NAPIER.

(Circuit Court of Appeals, Fourth Circuit. January 9, 1918.)

No 1558.

1. SEAMEN ⟹29(5)—INJURY IN SERVICE—LIABILITY OF VESSEL—EVIDENCE

Libelant was hired as muleteer on a British steamship transporting mules for the Allies from Newport News to Salonica. His duties had to do only with the care of the mules, and were in no way connected with the navigation of the ship, but when within two days from Salonica he was called upon by the foreman to act as watchman, and upon objecting was told that he would be imprisoned and fined if he refused. He requested a lantern, but was not given one, although other watchmen had lanterns the same night. On going in the dark upon the roof of a temporary structure built for stalls on the main deck, for air, as was customary with the watchmen, as he testified without serious contradiction, he fell through an opening over a stall, from which the removable cover had been left off, and was seriously injured. He knew of the opening, but not that it was ever left uncovered at night, and the captain of the ship testified that it was not, and that it was not on the night in question; but there was no testimony of an examination afterward to ascertain the fact. Libelant was not sent to a hospital in Greece, and received little, if any, medical attention until his return to the United States two months later, where he was discharged without any provision being made for his care. *Held*, that a finding by the trial court that libelant was injured through the negligence of those in authority on the ship, which also failed to give him proper care and attention, was fully supported by the evidence, and that under Seamen's Act March 4, 1915, c. 153, § 20, 38 Stat. 1185 (Comp. St. 1916, § 8337a), which provides that, "in any suit to recover damages for any injury sustained on board vessel or in its service, seamen having command shall not be held to be fellow servants with those under their authority," the ship was liable for the injury.

⟹For other cases see same topic & KEY-NUMBER in all Key-Numbered Digests & Indexes

Digitized by Google

2. ADMIRALTY ⟹118—REVIEW ON APPEAL—FINDINGS OF FACT.
While findings by an admiralty court on questions of fact are reviewable on appeal, when made on conflicting evidence they are entitled to and are given great weight, and will not be reversed, except for plain error.

Appeal from the District Court of the United States for the Eastern District of Virginia, at Norfolk; Edmund Waddill, Jr.. Judge.

Suit in admiralty by Robert Lee against the steamship Baron Napier; D. McDonald, master and claimant. Decree for libelant, and claimant appeals. Affirmed.

Leon T. Seawell, of Norfolk, Va. (Hughes, Little & Seawell, of Norfolk, Va., on the brief), for appellant.

Allan D. Jones, of Newport News, Va. (W. R. Walker, of Newport News, Va., on the brief), for appellee.

Before PRITCHARD and KNAPP, Circuit Judges, and CONNOR, District Judge.

PRITCHARD, Circuit Judge. This is a libel filed on behalf of Robert Lee against the British steamship Baron Napier in the District Court of the United States for the Eastern District of Virginia for damages for personal injuries growing out of an accident on board the steamship in December, 1916. The court below held that the injuries arose by reason of the negligence of the steamship, and assessed the damages at $1,500. The facts may be epitomized as follows:

Lee was employed by the master of the ship in November, 1916, while the ship was at Newport News, Va., destined on a voyage to Egypt. He signed as a muleteer; the ship being engaged in carrying mules to the Allies. His duties had only to do with the care of the mules, and were in no way connected with the navigation of the ship. In order that the ship might carry animals on deck, as well as between-decks, a wooden structure of a temporary nature was constructed on the forward main deck, running forward on port and starboard from the bridge to the forecastle. The width of this structure, on each side, was twelve feet; it was eight feet high, and fitted with stalls to take care of the animals. As a part of this structure, running across the ship and joining the port and starboard structure was a connecting platform about five feet wide, and eight feet above the main deck. This platform or bridge was reached by a flight of wooden steps rising from the main deck. It was in front of the steel deck, which ran athwart ship; the steel deck had a railing—"iron railing, iron stanchions and rails." There was no railing along the outer edge of this five-foot wooden platform, the same being used as a passageway by the men. On the roof of the stalls on the main deck, on the starboard side, a row of planks was laid to protect the canvass which covered the roof from the wear of the men's shoes in passing thereon. A portion of the roof of the stalls was removable, just opposite hatch No. 2. When this portion is off there is no walkway along and over the roof of the stalls.

Digitized by Google

The evidence shows that the muleteers, when serving as watchmen, were accustomed between rounds to go upon this superstructure to get fresh air. The ship, being tightly closed, was very warm, the air in the hold was foul, and it was necessary for a watchman to go out of the hold from time to time in order to keep fit for his duties. Lee testified that he went up the wooden stairway from the main deck, and, turning to his left to go upon the roof of the stalls, advanced but a step along the walkway and fell through the opening in the roof. The appellant contended that the boards had not been removed, and that Lee did not fall at the point he claims, but that he fell from the wooden passageway, which appellant's witness McIntyre stated was eight feet above the main deck and without a handrail. Appellant, in the third paragraph of his answer, contends that appellee should not have used this passageway, but should have passed along in front of the captain's cabin over a passageway on the bridge deck.

As we have stated, Lee had been employed as a muleteer, and not as a watchman, but three days from Salonica, at midday, was called upon by the foreman of the muleteers to watch that night. He was not provided with a lantern, though he asked both the foreman of the muleteers and at the engine room for one, nor was he instructed in his duties. Appellee declined to watch, but was threatened with fine and imprisonment if he did not obey. He thereupon entered upon his duties, and on the first night fell, as he contends, into an unguarded and unlighted trap, and was seriously injured. In falling, appellee struck his head, broke one or two ribs, and seriously injured his left kidney. He also asserts that he received little attention from the ship's doctor, who claimed that he was feigning, and not really injured; that he was placed in his bunk in an insanitary room with 40 men; that he was not sent to a hospital in Greece, but was brought back to the United States and discharged without any provision being made for his care.

The case was heard in the lower court upon oral and written testimony, and the District Judge held:

"That the personal injuries to the libelant, Robert Lee, alleged in the libel, arose by reason of the negligence of the steamship Baron Napier, and that said ship also negligently failed to take proper care to furnish medical attention and to take proper steps to effect his cure, and that the said libelant is entitled to recover against the steamship Baron Napier damages sustained, doth so decree, and, proceeding to assess the damages of said libelant upon the evidence heard in open court, doth assess the damages at $1,500."

Appellee, in the court below, alleged that he was entitled to have his expenses incident to his cure and care, and damages for failure of the ship to furnish medical attention. There are five assignments of error, but counsel for appellant, at the conclusion of their brief, stated their contention as to the points involved as follows:

"The libelant in this case has failed utterly to show by the weight of the evidence that his injury was caused by the negligence of any one upon the steamship. Having furnished all proper medical attention and settled all claims for wages, nothing further should be paid, and the decision of the District Court should be reversed."

Digitized by Google

The foregoing statement brings the matters in controversy within a narrow compass. Appellant bases its appeal in this instance upon the ground that the findings of fact by the court below were erroneous.

[1] The first question is as to whether "the accident was caused solely by the negligence of the appellee, for which the steamship is not responsible in damages." It was shown by the evidence of appellee that he was engaged as muleteer, for which service he was to receive the sum of $20 for the trip. He further testified that his duties as muleteer consisted of feeding and watering the animals and cleaning out the stalls, and that this service was performed in the daytime; that the ship proceeded from the point of departure and thence sailed for Salonica; that when 2½ days out of Salonica, at noon, he was ordered by the head foreman of the muleteers to turn in and rest, as he wished him to be night watchman, to take the place of a watchman who had been caught asleep the night before.

The witness McCormack was introduced by appellant, and, among other things, testified that he was "head foreman" in charge of the muleteers, "everything except the crew"; that "these men have nothing whatever to do with the navigation of the ship"; that "I signed as head foreman and am paid by the ship." Lee testified that McCormack told him that he had orders from the captain to put him on as night watchman; that he (appellee) did not want to serve as night watchman, but was ordered to do so and admonished that, if he did not serve in that capacity, he would be put in the forepeak and fined £1; that he asked McCormack for a light, and he referred him to the engineer; that he did not receive a light, nor did McCormack or any one else undertake to get him one, in order that he might safely go about his work. He also stated that two watchmen were aft and two forward; those aft being Quarles and Nelson.

The witness Quarles, among other things, testified as follows:

"I have a lantern. Lee could have got a lantern, if he wanted it. There are plenty on the ship at that time, and he could have gotten a light up there if he wanted it. I do not know whether he asked for a lantern or not. When we were down there in the Mediterranean, about two days from Salonica, I was carrying a light; but you have to blind it with a bag. I don't know about other lights forward. I had one back aft. Me and another fellow named Nelson, he had one."

Appellee stated positively that he made every effort to secure a lantern, but failed to do so, and that he had no lantern at the time he was injured. He further says:

"I had been up on that superstructure in the daytime. I worked there several days, carrying hay and carrying feed. At a point in the superstructure the diagrams show that the boards might be taken out the whole width of the superstructure, to hoist up and throw manure and trash out, and when they are loading mules they take the top off also. When I went up on the superstructure and fell, I came from the well deck up those wooden steps to the bridge over the top. I could not get on the bridge deck. I had no business there. I was watchman and ordered to stay off, and had I been found there I would have been fined £1. * * * I was on this side night watching, and there was no place for me to go but up on the superstructure to sit down. I went up the steps and on the superstructure, and on the third step I seen myself falling right on the horse stall where the cleats are. I came upon the

Digitized by Google

superstructure, where I had been accustomed to carry hay back and forth. As to why I fell, I never knew how it happened; never saw it open at night before; never knew it was open at night before. Everything was moved; there was nothing there; there was a great big hole. I had no lantern; did not have any light; if I had, I would not have fallen; * * * hot in the ship, and the night watchman told me to go up and get air; and as I was walking out on the steps on the third step I came down in the stall."

The witness McIntyre, who contradicts Lee's evidence as to how the accident occurred, among other things, said:

"I could not see whether he had a lantern or not. If he had a lantern, it was not lit."

He then proceeded to give his version as to how the accident occurred in the following language:

"I was on the Baron Napier, on her voyage in December, when the man named Robert Lee claimed that he fell. It was at night. The man standing here in the cabin is the man that claimed to have been injured. I was standing with Moore, the night foreman, and the boy, Lee, was standing out right on the superstructure running amidships, and the foreman said something to him about going in the bridge space to see about some pans that were under some mules, or something to that effect, and he started down to go to the steps, and when he started to the steps, instead of going to the steps, he stepped off the plank, off the superstructure, and went down to the edge of the hatch coamings, which is covered with hay, and then crawled out of there and sat down by No. 2 hatch; and a fellow by the name of Tom King was the night watchman at that time, and he asked him, did he hurt himself, and he said, 'Yes,' he hurt his back; and the foreman told him, if he hurt his back very bad, he had better go and turn in his quarters."

In support of appellee's contention we have his positive evidence that he fell through an opening into a stall, and that there were no mules in the stall at the time, and it is significant that appellant offered no evidence directly contradicting him on this point. It is further insisted by appellant that appellee must have visited this stall earlier in the evening, and, therefore, should have known that the roof was off. This is bare conjecture, and cannot be taken as evidence.

Appellant also insisted that it was shown by the evidence of McDonald, master of the ship, and McCormack, foreman of the muleteers, and McIntyre, that the roof was on the stall and that the walkway thereon was unbroken. McDonald, in testifying, says:

"On the night of the accident there was no part of it removed. I make an inspection—a point of seeing that all these openings, if they were used at any time, are put on before the night comes on, and I can say positively that they were on."

When being asked on cross-examination if he had any particular reason for remembering the opening was closed on the night in question, other than his general practice, this witness said that he made a careful examination every evening with a view of ascertaining whether the places were closed, as he regarded them as dangerous, and stated further that:

"I made a point of it that night, the same as any other night, to see that they were closed."

He also testified that the places were kept open at sea, but that he was positive that they were closed that night, because they were usually

Digitized by Google

closed. Counsel for appellee insisted that at most this witness was testifying—

"as to the usual order of things; but, like most accidents, this arose because a duty was neglected, and the usual order not observed."

McCormack, among other things, testified:

"I did not make any examination of the superstructure after the accident was reported."

It further appears that he did not make any examination of Lee to ascertain the extent of his injuries, nor did he secure any medical attention, notwithstanding the fact that he admits that he learned of the accident a half hour after it occurred.

McIntyre also testified that:

"The point from which Lee fell is also a part of the wooden superstructure, and there is no rail from where he fell."

This witness further testified:

"Yes; he could have been required to be on the part of the superstructure on which I saw him before he fell. Those horses back here would have called him."

When witness spoke of the horses "calling him," he evidently intended to convey the idea that the care of the horses required him to go to this particular point. This witness was introduced by appellant, and according to his testimony the appellee fell from a dangerous and unguarded place, where he was required to be in the discharge of his duties.

Charles Stoval, the second cook, testified that he saw appellee at 6 o'clock the morning after the accident in his bunk, and that appellee told him how he had been hurt. He also stated that, when McIntyre came to the kitchen on the morning after the accident to get his coffee, that witness told him about appellee being injured at which time McIntyre did not appear to have any knowledge of the accident, but rushed down to the quarters of the muleteers, saying to Stoval, "I will go right down and see him."

The witness McIntyre testified that he saw Lee fall, but that he appeared to fall from the passageway. This corroborates the testimony of Lee to the effect that he fell from some portion of the ship. Witness McIntyre further testified that:

"The point from which Lee fell was a part of the wooden superstructure, and there was no rail from where he fell."

This witness also testified that it was Lee's duty as watchman to be on the superstructure where he saw him just before he fell. Under these circumstances appellee contends that, even though appellant's contention as to where he was when he fell, to wit, on an unguarded passageway over which he was required to pass in the performance of his duties, be correct, that the ship would be liable.

There is one significant point in this case, which we think should be given great weight in determining the questions involved, and that is that, when appellee started on the trip, he was healthy and strong. The appellee, in his testimony as to his condition after the accident, among other things, said:

Digitized by Google

"* * * That bone was broken on the ship; never had a accident before that; had been a strong working man. My duties as muleteer were in picking up hay and putting it on my shoulder, and carrying 100-pound sacks of bran. If you did not do it, you were logged and put in the forepeak."

This evidence clearly shows that he must have been in good physical condition, and it is but fair to assume that the ship would never have employed him to perform duties of this character, had he not been an able-bodied man. Further, the appellant failed to offer any evidence tending to show that he was not able to do the work assigned to him when he went on the ship. It also appears from the evidence of Dr. Martin, who examined appellee when the ship reached port on its return trip, about two months after the accident happened, that appellee was seriously injured. Among other things Dr. Martin said:

"I do not think a man with a rib broken as shown there, and in that condition, could have lifted hay or performed duties of a laborer."

This testimony tends to corroborate the statement of appellee, and, we think, shows conclusively that appellee must have received his injuries while engaged in work on the ship.

[2] It is a well-established rule in admiralty that the conclusions of the lower court on questions of fact will not be disturbed or reversed, unless it should clearly appear that the court had erred. In other words, great weight should be attached to the findings of fact, where there is a conflict of evidence in the court below. This court, in the case of Baker-Whiteley Coal Co. v. Neptune Navigation Co., 120 Fed. 249, 56 C. C. A. 85, said:

"We have uniformly held that, while the findings of the court on questions of fact can be reviewed in this court, the conclusion of the District Court on a conflict of evidence is entitled to and treated with great respect."

In this instance we think it is clearly established that Lee was injured while discharging a duty which he was required to perform by one who had the power to direct his movements. That he was injured cannot be doubted, when we consider all the evidence; and that his injury was, in all probability, due to the fact that he was not furnished a lantern by the use of which he could have observed any dangers incident to the duty which he was performing. If, thus employed, he fell from any portion of the ship in consequence of not being able to see his way, and was injured, we think the finding of the court below that the ship was negligent was proper.

However, it is insisted by counsel for appellant that the liability of a vessel for injuries received by a seaman depends upon the unseaworthiness of the ship, or her failure to supply and "keep in order proper appliances appurtenant thereto"; that the crew, except, perhaps, the master, are between themselves fellow servants; and that, therefore, the fellow-servant doctrine applies to such employé. In this instance the captain or the head foreman should have furnished Lee with a lantern, when they directed him to perform the duties incident to the work assigned to him; but this was not done.

Section 20 of what is known as the "Seamen's Act," enacted on

Digitized by Google

the 4th day of March, 1915, abolishes what is known as the fellow-servant doctrine by providing:

"That in any suit to recover damages for any injury sustained on board vessel in its service, seamen having command shall not be held to be fellow servants with those under their authority." Comp. St. 1916, § 8337a.

By the second assignment of error it is insisted that the court erred in holding that the steamship negligently failed to take proper care or to furnish proper medical aid to the injured man. It is contended by appellant in support of this proposition that Dr. Wimbish, the ship's physician, made a thorough examination of the appellee after his injury, and that he received the necessary and proper treatment. Dr. Wimbish, in testifying as to the extent of his examination, said:

"I did not have reason to believe there was anything wrong with his kidneys. I did not examine his urine. He did not pass any blood on board ship as far as I knew. * * * As to his rib, this enlargement I referred to, to judge by the result, it looked like it might be a tubercular drain. No, sir; I did not find the broken rib. * * * I could not say positively now whether I examined his head or not. I discovered no condition that necessitated any particular treatment. * * * I thought he was pretending to keep from working so far as that bone was concerned."

The testimony of Dr. Martin, a disinterested witness, is sufficient to convince any one that appellee did not receive proper medical treatment. Counsel for appellant strenuously insist that appellee was not telling the truth when he said that his ribs were broken on the ship, and in this connection in their brief refer to that part of Lee's testimony where he says that "I am going to tell the truth if I can." An examination of the record discloses the fact that at the time he made this statement he was being cross-examined by counsel for appellant as to the width of the horse stalls. Among other things, he said:

"As to their width, one from here to there (indicating about four feet wide). Eighteen feet tall and four feet wide, and that is the idea. I never measured it but about four feet wide. It looked to me as wide as from here to there (indicating). I cannot say; I am going to tell the truth, if I can, but I never measured it."

It clearly appears, from the testimony of this witness, that he is not educated, and his statement, while being somewhat involved, is not such as to discredit his testimony, and, further, he was talking about measurements, and his testimony could not be reasonably construed so as to apply to the injury he received to his ribs, or that he was not disposed to tell the truth. A great deal of the testimony was oral, and the learned judge who heard the case had an opportunity to observe the conduct of the witness, and under the circumstances we are convinced that his findings of fact are correct, and therefore should not be disturbed. It is manifest that the ship's physician was under the impression that appellee was not badly injured when he was called upon to attend him, and it is also clear that he was prejudiced against appellee, and this is no doubt the view that the court below took about the matter in passing upon the testimony.

As we have already said, the court below should not be reversed,

Digitized by Google

except for plain error, and the appellant has failed to convince us that the decision of the lower court was erroneous.

For the reasons stated, we are of opinion that the decree of the lower court should be affirmed.

(249 Fed. 134)

HORNER v. HAMNER.

(Circuit Court of Appeals, Fourth Circuit. February 5, 1918.)

No. 1556.

1. BANKRUPTCY ⟹414(1)—DISCHARGE—SPECIFICATIONS—BURDEN OF PROOF.
One filing specifications against a discharge in bankruptcy has the burden of proving them.

2. JUDGMENT ⟹721—CONCLUSIVENESS—MATTERS CONCLUDED.
A judgment recovered in the state courts by claimant against a bankrupt, on the theory that he was liable as an indorser of notes executed by a partnership subsequently adjudged a bankrupt, is not, where the claimant, at the time of rendition of the judgment, did not know the bankrupt was then a member of the firm, a conclusive adjudication as to the bankrupt's liability as a member of the partnership.

3. BANKRUPTCY ⟹31—SCHEDULES—FILING—EFFECT.
The filing of schedules in a proceeding in bankruptcy is an ex parte act on the part of the bankrupt, and in that proceeding is a solemn admission, which, unless corrected, binds him, but it is in no proper sense res judicata, either as to creditors or the bankrupt; hence the filing of schedules by one member of a firm is not a conclusive adjudication against another, who did not participate therein, but whose liability as a partner was subsequently established.

4. BANKRUPTCY ⟹404(2)—DISCHARGE—FAILURE TO APPLY.
A failure to apply for a discharge in bankruptcy has the same effect as if the discharge in that proceeding had been denied.

5. BANKRUPTCY ⟹404(2) — DISCHARGE — FAILURE TO APPLY — PARTNERSHIP DEBTS—"BANKRUPT."
The bankrupt, believing that a furniture business had been incorporated, sold his interest and received two notes, one signed in the purported corporate name of the partnership and the other signed by the purchasers. These notes he indorsed, and judgment was thereafter recovered against him in the state court as an indorser. The company thereafter was adjudicated a bankrupt as a partnership, and the purchasers listed the notes as liabilities; but the partnership, as such, did not apply for a discharge. Bankruptcy Act July 1, 1898, c. 541, § 1, 30 Stat. 544 (Comp. St. 1916, § 9585), declares that "bankrupt" shall include a person against whom an involuntary petition, or an application to set a composition aside or to revoke a discharge has been filed, or who has filed a voluntary petition, or who has been adjudged a bankrupt, while section 5 (Comp. St. 1916, § 9589) declares that a partnership during the continuation of the partnership business, or after its dissolution and before final settlement, may be adjudged a bankrupt. *Held* that, notwithstanding the entity theory of a partnership, the bankrupt was not as an individual precluded from obtaining a discharge from his liability, as a member of the partnership, on the notes mentioned, because of the failure of the partnership to apply for a discharge, for, in view of the entity theory, the adjudication of the partnership did not affect the bankrupt's individual liability.

[Ed. Note.—For other definitions, see Words and Phrases, First and Second Series, Bankrupt.]

⟹For other cases see same topic & KEY-NUMBER in all Key-Numbered Digests & Indexes

Digitized by Google

Appeal from the District Court of the United States for the Western District of Virginia, at Lynchburg; Henry Clay McDowell, Judge.

In the matter of the bankruptcy of J. W. Horner. From an order granting the bankrupt a discharge from all debts provable against him, excepting two claims of S. G. Hamner, trustee, the bankrupt appeals. Reversed.

A. S. Hester, of Lynchburg, Va., for appellant.

J. Easley Edmunds, Jr., of Lynchburg, Va., for appellee.

Before PRITCHARD and KNAPP, Circuit Judges, and CONNOR, District Judge.

CONNOR, District Judge. While the transcript does not disclose specific findings of fact, the objection and specifications to appellant's petition for discharge and the answer thereto disclose the following case:

Prior to April 28, 1914, the Weaver Furniture Company, a corporation, was operated by appellant, J. W. Horner. Some time prior to that date counsel was employed for the purpose of securing an amendment to the charter, changing the name of the corporation to the People's Furniture Company. Acting upon the advice of the attorney, stationery carrying the name, the People's Furniture Company was used by the managers of the corporation, although the charter had not been amended, as they supposed. On April 28, 1914, appellant sold his entire stock in said corporation to R. A. Dearing and C. S. Dearing, and received in payment therefor, one note for $254.60, signed "The People's Furniture Co., Inc., by R. A. Dearing, Secy. and Treas.," and one other note for $366.67, signed "R. A. Dearing and C. S. Dearing." Those notes were indorsed, by appellant, to appellee "as attorney," in payment of certain debts which he held for collection against the People's Furniture Company. After the purchase of appellant's stock by R. A. and C. S. Dearing, they changed the name of the company to the Dearing Furniture Company and it so continued until November 6, 1914. It appears from the record that, at the October term, 1914, of the corporation court of Lynchburg, appellee recovered judgment against the Dearing Furniture Company and appellant, J. W. Horner, on the two notes in controversy.

On November 6, 1914, "The Dearing Furniture Company, composed of R. A. Dearing, C. S. Dearing, and J. W. Horner, was adjudicated a bankrupt," upon the petition of certain creditors of said company. Neither the Dearing Furniture Company nor either of the partners applied for a discharge. Appellee says:

> "In the schedule filed in the said bankruptcy proceedings by R. A. Dearing he listed the debt due your respondent as trustee, as one of the firm debts. Your respondent did not know, until that time, that the said J. W. Horner was a partner in said firm, but, being informed of this fact, he filed proof of his said claim in the said bankruptcy proceedings."

Appellant says that "he sold his entire stock" in the People's Furniture Company, and received the notes in payment; that he then had no interest in the said company"; that some time afterwards, in the

Digitized by Google

year 1914, he purchased, or acquired, some 4 shares of stock in the Dearing Furniture Company, which he continued to hold up to the filing of the bankruptcy proceedings, October 17, 1914.

In view of this statement of appellant that he did not know that appellee was a member of the company until the schedule in the involuntary proceeding was filed, it is manifest that, in the judgment which he recovered against the Dearing Furniture Company and Horner, at the October term of the court, the latter was liable, not as a partner, but as indorser. Appellee says that appellant, when he sold to the Dearings, "retained a small interest." There is no evidence, nor finding in this respect. Appellant took no part in filing the schedules.

On October 5, 1916, appellant filed his voluntary petition and was adjudicated bankrupt in the District Court for the Western District of Virginia. He scheduled the judgments obtained by appellee on the notes in controversy—and several other debts, with the following statement:

"The claims hereinafter mentioned and attached hereto * * * are the same that were filed by the Dearing Furniture Company, in response to the adjudication of the company, being bankrupt in the petition of Mamie J. Rucker and others against the Dearing Furniture Company, Incorporated, a partnership composed of R. A. Dearing, C. S. Dearing, and J. W. Horner, which adjudication was of November 6, 1914, in which the judge of the District Court of the Western District of Virginia, adjudicated the Dearing Furniture Company, a partnership composed of R. A. Dearing, C. S. Dearing, and J. W. Horner, a bankrupt, and the individual members of said partnership not being mentioned or adjudicated bankrupts in said order, which claims are as follows, to wit."

No part of the record in that proceeding was introduced in this proceeding. It is conceded that the Dearing Furniture Company, and not the individual partners, was adjudicated "a bankrupt." On April 18, 1917, appellant filed his petition for a discharge "from all debts provable against his estate under said bankrupt acts, except such debts as are excepted by law from such discharge." Appellee filed objections to the granting of the petition, as to all debts which were provable in the involuntary proceeding against the Dearing Furniture Company. The District Judge granted to appellant a discharge from all debts provable against him, August 31, 1916, excepting "the two claims of appellee, which are specifically described, being the claims evidenced by the judgments, recovered on the notes referred to." To this exception appellant assigns error and appeals.

Were the notes held by appellee debts of either the People's Furniture Company, or its successor, the Dearing Furniture Company, at the date of the adjudication of the latter? Does the failure of the Dearing Furniture Company to apply for a discharge in the involuntary proceeding against it, bar his petition for a discharge in this proceeding from his individual liability, on account of the debts of the company?

[1, 2] While the facts, upon which the order appealed from, are not found, we assume that the District Judge based his conclusions upon the objections and answer. The burden of proof was upon the appellee to establish the truth of his specifications. The appellee insists

Digitized by Google

that, upon the record, appellant is estopped to deny that the notes held by him, and the judgments thereon, are the debts of the Dearing Furniture Company and that he is bound therefor as a partner—that these facts are res judicata. It is manifest that these notes were not, when contracted, the debts of the People's Furniture Company. It is true that the name of the company is signed to one of the notes. The other is signed by the Dearings. It is difficult to see how the purchase price of the stock of the company, bought by the individuals, can be made a liability of the company. If Horner, as suggested, retained an interest in the company, it is difficult to understand why he was willing to have the purchase money for the interest which he was selling made a liability of the company, thereby becoming individually liable for the debt due to himself. It is probable from what appears that, acting under the advice of counsel, the parties supposed that the People's Furniture Company was a corporation—that is, the Weaver Furniture Company under the new name. Horner seems to have become entangled in a medley of errors. After selling his stock and, in the present proceedings, surrendering his individual property, he finds himself held liable without possibility of release from notes which he accepted in payment therefor, because the Dearing Furniture Company did not apply for a discharge. This contention challenges careful investigation. The first judicial decision which the record discloses is that of the corporation court of Lynchburg, in October, 1914, when the appellee recovered judgment on the notes against the People's Furniture Company and J. W. Horner, as indorser. This we must assume, because appellee says that, at that time, he did not know that J. W. Horner was a partner. This judgment is not, therefore, res judicata as to any other liability of Horner than an indorser.

[3, 4] It is said, however, that R. A. Dearing, in the involuntary proceeding in bankruptcy against the Dearing Furniture Company, scheduled the notes as the debts of the company. That J. W. Horner was a party to that proceeding and is estopped to deny the truth of the statement of R. A. Dearing. Horner says that he took no part in the proceeding, or filing the schedules. It is manifest that this is true. Filing the schedule in a proceeding in bankruptcy is an ex parte act on the part of the bankrupt, and in that proceeding is a solemn admission which, unless corrected, binds him. It is, in no proper sense, res judicata, either as to creditors or the bankrupt. Certainly, in another and independent proceeding, it has no other force against the bankrupt than evidence of the truth of the statement.

Appellant, in this proceeding, schedules this, with other debts of the Dearing Furniture Company, stating his reason for doing so. He was evidently acting under the advice of counsel and for the manifest purpose of complying with the requirements of the statute. His action in this respect, while entirely proper, for the purpose of giving to the court, its officers, and his other creditors notice of the debts which he owed, entitled to share in the distribution of his assets, is not, in any sense, res judicata; it is not the judgment of the court. It is, by no means, clear that, appellee was entitled, in the involuntary proceeding against the company, to prove the debt which he held

Digitized by Google

against the members, and share in the distribution of the partnership assets. While one of them purported to be the debt of the company, it was competent for the trustee, or creditors of the company, to show by parol evidence that it was given for the benefit of the Dearings—and not of the company; the other note does not purport to be the debt of the company. There is a suggestion, but no proof, that the Dearing Company assumed the debts of the People's Company. This did not confer any new right upon the holder of the notes against the Dearing Company. Assuming that the notes were the debts of the Dearings, and that after their execution Horner became a partner in the People's Company, we are unable to perceive how he became liable for the notes otherwise than as indorser. R. A. Dearing, whose interest it was to do so, having scheduled appellee's debt as partnership liabilities, he was permitted to prove and share in the distribution of the assets, and now proves against Horner, individually, as he is clearly entitled to do on his liability, as indorser of the notes, and objects to his discharge because, as he alleges of his liability as a partner of the People's Furniture Company.

Conceding pro hac vice such liability, the question is presented whether, because of the failure of the Dearing Furniture Company to apply for a discharge in the proceedings against it, he is barred quoad this debt of a discharge in this proceeding. It may be conceded that a failure to apply for a discharge has the same force and effect as if the discharge in that proceeding had been denied. It is so uniformly held. Collier, Bankruptcy (11th Ed.) 347; In re Springer (D. C.) 199 Fed. 294.

[5] This, however, is not determinative of the question presented upon this record. The question relating to the effect of an adjudication of a partnership, but not of the individual partners, has given the courts much concern. It is conceded that the decisions are not uniform. The conclusion at which Mr. Collier has arrived, after a careful examination of the decisions, is:

> "That it is difficult to declare a rule based upon the majority of the cases. A very unsatisfactory conflict exists among the authorities." Collier, Bankruptcy (11th Ed.) 181.

That a partnership is a "person," who may be adjudged a bankrupt, either in a voluntary or involuntary proceeding, is clear—it is so declared in the act. Bankruptcy Act, § 1. This is based upon, and results from, the "partnership entity" doctrine recognized by Bankruptcy Act 1898, § 5. That an adjudication may be made of the partnership, as distinguished from, and exclusive of, the individuals composing it. Collier (11th Ed.) 181, and cases cited.

This was done in the proceeding against the Dearing Furniture Company—the individual members were not adjudged bankrupt. The company was the "person" adjudged bankrupt. It is insisted that, because appellant did not apply for a discharge in that case from his personal, individual liability, on account of the partnership debts, he is estopped from doing so in this proceeding. That the Bankruptcy Act of 1898 recognizes a partnership as a legal entity, a "person,"

Digitized by Google

which owns property and owes debts as distinguished from the individual partners, is unquestionably true. Bankruptcy Act, § 5. The partnership creditors appoint the trustee, the partnership estate is administered separately from the estates of the partners, and applied to the discharge of partnership debts, which must be proven against the partnership. "A partnership being a distinct entity, it owns its property, and owes its debts, apart from the individual property of its members, which it does not own, and apart from its individual debts, which it does not owe. It may be adjudged bankrupt, although the partners who compose it are not so adjudicated." Collier, Bankruptcy (11th Ed.) 168, citing many cases sustaining the text. While the decisions of the federal courts discover some divergence of opinion regarding the administration of estates of partnerships, and the individual partners, when all, or several, of them are also adjudicated, the question presented, upon this appeal has not, so far as our investigation goes, been discussed or decided. Whatever confusion of thought, either real or apparent, is found in the decisions, in dealing with bankruptcy proceedings, wherein partnerships are parties, relates to questions of adjustment of priorities and administration. That Congress did not intend, by introducing the "partnership entity doctrine" into the Bankruptcy Law of 1898, based upon equitable principles applied in administering estates of insolvent partnerships, to disturb the relation of partners to the debts of the partnership, or change their liability, is pointed out by Mr. Justice Holmes in Francis v. McNeal, 228 U. S. 695, 33 Sup. Ct. 701, 57 L. Ed. 1029, L. R. A. 1915E, 706. He says:

"Since Cory on Accounts was made more famous by Lindley on Partnership, the notion that the firm is an entity, distinct from its members, has grown in popularity, and the notion has been confirmed by recent speculations as to the nature of corporations, and the oneness of any somewhat permanently combined group, without the aid of law. But the fact remains as true as ever that partnership debts are debts of the members of the firm, and that the individual liability of the members is not collateral, like that of a surety, but primary and direct, whatever priorities there may be in the marshaling of assets. The nature of the liability is determined by the common law, not by the possible intervention of the Bankruptcy Act. * * * The question is whether the Bankruptcy Act has established principles inconsistent with these fundamental rules, although the business of such an act is, so far as may be, to preserve, not to upset, existing relations."

After citing the language of the act, defining the word "person," including a partnership, which may be adjudged bankrupt, the learned justice says:

"No doubt these clauses taken together recognize the firm as an entity for certain purposes, the most important of which, after all, is the old rule as to the prior claim of partnership debts on partnership assets and that of individual debts upon the individual estate. Section 5g. But we see no reason for supposing that it was intended to erect a commercial device for expressing special relations into an absolute and universal formula—a guillotine for cutting off all the consequences admitted to attach to partnerships, elsewhere than in the bankruptcy courts."

The liability of the "person"—the partnership—for partnership debts may be enforced by subjecting the partnership property to their payment, when this "person" has been adjudicated a bankrupt; such

Digitized by Google

"person" may, upon complying with the provisions of the act, be discharged from its debts. This discharge is not granted to the individual partners, "trading" or "carrying on business" as partners, but to the partnership, a legal entity. This discharge has no effect upon the individual liability of the partners. It has been uniformly held that in a proceeding by a partnership, in which the individuals are not adjudicated bankrupt, they are not entitled to a discharge. In re Hale (D. C.) 107 Fed. 432. Judge Lowell, in Re Forbes (D. C.) 128 Fed. 137, discussing the "partnership entity" doctrine, says:

"Under an adjudication merely joint, it is impossible to discharge the partners as individuals, even from their joint debts, for every joint debt of the partnership is also a separate debt of each partner, and separate debts can be discharged only after an individual adjudication, operating upon the separate estate."

Finding difficulty in applying the entity doctrine, and to avoid confusion, the judge says that:

He "has consistently refused to make the adjudication of a partnership, unless all the partners be adjudged bankrupts at the same time."

Whether this is the correct view is not material here, because the "partnership entity" was, upon the petition of its creditors, adjudged "a bankrupt." The court was not asked to adjudge the individual partners; there was no suggestion that they were insolvent, or had committed an act of bankruptcy. Judge Lowell was of the opinion that a partnership was not "insolvent," unless each and all of the partners were so. This discards the "entity doctrine," with its logical results. In re Blair (D. C.) 99 Fed. 76; Vaccaro v. Security Bank, 103 Fed. 442, 43 C. C. A. 279. That this last view had not been adopted uniformly by the federal courts is manifest from an examination of a number of cases, in which the partnership has been adjudicated "a bankrupt," exclusive of the individual partners. Judge Sanborn, in Re Bertenshaw, 157 Fed. 363, 85 C. C. A. 61, 17 L. R. A. (N. S.) 886, 13 Ann. Cas. 986, says:

"Since the property of the unadjudicated partners does not vest in, and may not be administered by, the trustees of the bankrupt partnership, the discharge of the partnership discharges that entity only from its debts, and leaves the partners still subject to their liability to pay the unpaid balance of the claims of the partnership creditors."

We are not inadvertent to the language found in the concluding sentence of the opinion of Mr. Justice Holmes in Francis v. McNeal, supra, but do not think it affects the clause quoted. Judge Sanborn was, in the Bertenshaw Case, discussing the question regarding the administration of the estate. The language quoted is used, in the discussion, as expressing clearly what is in our minds upon the question presented in this record.

Judge Hough, in Re Pincus (D. C.) 147 Fed. 621, says:

"In a proceeding of this kind [an involuntary proceeding against a partnership] under section 5, the partnership is declared to be a 'legal entity, irrespective of the status or the separate rights or the status of the individual copartners.' * * * Individual discharges cannot be granted, under an adjudication against the partnership only. * * * No steps having been

Digitized by Google

taken in this matter by or against the partnership, as individuals, the only thing adjudicated was the partnership entity, and the only thing dischargeable is the same entity."

Assuming that Horner could not, in the proceeding against the Dearing Company, have been discharged from his individual liability for the debts of the company, and that a discharge of the company would not affect his individual liability, it is difficult to perceive why, in this proceeding, the only one in which he could have a discharge, he is barred of having a discharge of his liability for such debts, because the partnership did not apply for a discharge. It may be suggested that he should have been adjudicated a bankrupt, individually in that proceeding. To this the answer is manifest: The partnership creditors did not ask the court to do so, and there is no evidence, or suggestion, that he was, at that time, insolvent. There is no suggestion in the statute, or any decision which we have found, that Horner was under any legal obligation to become a bankrupt individually. It may be that he was of the opinion that he was not a partner, or that, after applying the partnership assets to the debts, he was able to pay the balance. However this may be, it is manifest that the only discharge which could have been granted in that proceeding was to the partnership—the Dearing Furniture Company—which would not have availed Horner. He would have been still liable individually for the debts. He has, in this proceeding, surrendered his individual property for the payment of his individual debts, among them those due appellee, either because he was a partner, or as an indorser on the notes. This is the first and only opportunity which has come to him to take the benefit of the protective provisions of the act. The court finds that he has complied with its requirements.

We are of the opinion that he is entitled to be discharged from all debts provable against his estate on the date of his adjudication. There was error in denying his discharge from the debts for which he was found to be liable because he was a partner in the Dearing Furniture Company. This will be certified to the District Court, to the end that a discharge may be granted, according to his petition.

Reversed.

(249 Fed. 141)

McCORMICK et al. v. PROVIDENT LIFE & TRUST CO. OF PHILADELPHIA et al.

(Circuit Court of Appeals, Fourth Circuit. January 25, 1918.)

No. 1549.

1. WILLS ⟹681(2)—TESTAMENTARY TRUST—POWERS OF TRUSTEES.

Under a will by which the testator devised and bequeathed his residuary estate in trust, with power in the trustees to continue to hold the property, or to sell any of it and reinvest the proceeds, the trustees took a legal title to the real estate, which will support an action of ejectment.

2. EJECTMENT ⟹88, 93—TRIAL—FINDINGS BY COURT.

Rulings on the admissibility of evidence and findings of the court on the trial of an action of ejectment without a jury affirmed.

⟹For other cases see same topic & KEY-NUMBER in all Key-Numbered Digests & Indexes

Digitized by Google

In Error to the District Court of the United States for the Southern District of West Virginia, at Charleston; Chas. A. Woods, Judge.

Ejectment action by the Provident Life & Trust Company of Philadelphia and Edward R. Wood, Jr., executors and trustees of Stuart Wood, deceased, against David McCormick, the United Fuel Gas Company, Rebecca C. Davis, Henrietta Daingerfield, and others. Judgment for plaintiffs, and defendants bring error. Affirmed.

George J. McComas, of Huntington, W. Va. (Enslow, Fitzpatrick & Baker, of Huntington, W. Va., on the brief), for plaintiffs in error.

C. W. Campbell, of Huntington, W. Va. (Campbell, Brown & Davis, of Huntington, W. Va., on the brief), for defendants in error.

Before PRITCHARD and KNAPP, Circuit Judges, and CONNOR, District Judge.

PRITCHARD, Circuit Judge. This is an action in ejectment instituted in the District Court of the United States for the Southern District of West Virginia to recover a certain tract of land situated in the county of Mingo, state of West Virginia. By stipulation of counsel a jury trial was waived and the case was heard before Woods, Circuit Judge, sitting in the District Court. The court found in favor of the plaintiffs, and judgment was entered accordingly, to which the defendant excepted, and the case comes here on writ of error.

[1] There are eleven assignments of error, eight of which relate to the conclusions of law reached by the court below upon the testimony. Three of the assignments, to wit, the eighth, ninth, and tenth, pertain to the ruling of the court in holding that certain documents were admissible. The eighth assignment is to the effect that:

"The court erred in allowing the introduction as Exhibit 9 of the last will and testament of Stuart Woods over the petition of the defendants."

The defendants insist that the will of Stuart Wood does—

"not confer power on the plaintiffs to bring this or any other suit. This property would go to the heirs as named in the will, unless disposed of in some of the ways specifically set forth in the said will."

After disposing of certain articles of personal property the following provision is contained in the will:

"All the residue of my estate I bequeath to my said trustees, viz., the Provident Life & Trust Company, Edward R. Wood, Jr., in trust, however, for the purposes following."

The will then, among other things, provides:

"That the trustees may, in their discretion, continue to hold any property, real or personal, that I own, and may dispose of the same to the best advantage and reinvest the proceeds. * * *"

These words empower the trustees, not only to develop the property, but also give them unqualified power in their discretion to sell and convey the same and reinvest the proceeds. The will of the testator was duly probated in Philadelphia, Pa., where he resided at his death; a copy of the same containing the probate being recorded in the clerk's office for the county of Mingo, W. Va., in accordance

Digitized by Google

with the provisions of section 35, chapter 77, of the Code of that state. Thus it will be seen that by virtue of the will the legal title to the property in question became vested in the executors and trustees, with the right and authority, as we have stated, of selling and disposing of the same. Under these circumstances, we think the ruling of the lower court was eminently proper.

The ninth assignment of error provides that:

"The court erred in holding that under the said exhibit and the said will the Provident Life & Trust Company could maintain this suit."

In view of what we have said as respects the eighth assignment of error, we feel that it is not necessary to enter into a discussion of the question sought to be raised by this assignment.

[2] By the tenth assignment of error it is contended that:

"The court erred in allowing the introduction of what is known and described as Plaintiffs' Exhibit No. 10.

Defendants, among other things, introduced Exhibits Nos. 22 and 23. Exhibit No. 22 contains a list of real estate sold in March, 1886, for the nonpayment of taxes for 1883 and 1884, and purchased by the state. Among other tracts of land this list contains the 135 acres in controversy. Exhibit No. 23 purports to be a copy of the land book by which it is shown that the tract consisting of 135 acres was assessed to George R. C. Floyd for the year 1884. Defendant also introduced Exhibit No. 24 containing the certificate of the clerk of the circuit court of Logan county showing that the assessment book for the year 1883 was lost. Nothing else appearing, this would put the legal title in the state of West Virginia. However, under the law in force in West Virginia in 1887 the former owner, and his heirs or assigns, are permitted to redeem his lands from the forfeiture and thus reinvest himself with the title. Chapter 105, Code of West Virginia. Plaintiffs' Exhibit No. 10, the introduction of which was objected to by the defendant, shows that on the 12th day of October, 1887, when the special commissioner made the deed for the 135 acres to John F. Keator, that the latter applied to the clerk of the circuit court of Logan county and upon such application a decree was entered permitting Keator to redeem the 135 acres of land, along with numerous other tracts. We think the ruling of the court below in permitting the introduction of this exhibit as a link in the chain of plaintiffs' title was correct.

The learned judge who heard this case filed an opinion, in which he found certain facts relating to the plaintiffs' chain of title and right to recover. The opinion is as follows:

"In this action of ejectment a jury trial was waived and the cause was submitted to me for determination. The plaintiff made out a complete chain of title to the tract of land of 135 acres described in the declaration, commencing with a grant from the state of Virginia to William Paisley dated February 1, 1854. Paisley conveyed to George R. C. Floyd and John W. Johnson August 9, 1855, and Johnson conveyed his interest to Floyd December 5, 1855. The creditors of Floyd instituted proceedings in the state court to subject his land to the payment of debts, and on October 12, 1887, J. C. Bing and H. C. Ragland, special commissioners, conveyed to John F. Keator. Keator con-

Digitized by Google

veyed to Stuart Wood March 23, 1888. Wood devised the land to the plaintiffs in trust by his will dated March 3, 1914.

"The defendants set up three defenses by which they undertake to break into the plaintiffs' title:

"(1) A sale for delinquent taxes for the years 1883 and 1884, and purchase by the state.

"This defense seems to be sufficiently disposed of by the showing on the part of the plaintiffs that on October 12, 1887, Keator redeemed the land from the state.

"(2) Adverse possession under color of title, consisting of numerous conveyances made at different times to defendants and those under whom they claim.

"Some of these colors of title seem to embrace the 135-acre tract here involved, but the acts of possession relied on were not on the tract in dispute. Under the well-known principle, therefore, they could not affect the superior legal title.

"(3) In 1870 George R. C. Floyd, under whom plaintiffs claim, instituted a suit in a court of chancery against James Step and A. S. Gray for the purpose of enforcing specific performance of a contract to convey to him certain lands described in the bill. In 1882 a decree was made in this cause, adjudging Floyd to be entitled to the relief asked and directing William Straton, a commissioner of the court, to convey the land to him; the defendants being nonresidents. Straton executed the conveyance on May 24, 1882, and there is little doubt but what he undertook to embrace in the conveyance the 135-acre tract here in dispute. Subsequently in the same cause, on the 6th of February, 1882, Floyd was enjoined from 'selling, disposing of, or in any way incumbering the real estate mentioned in his bill or his amended bill and conveyed to him by Special Commissioner William Straton, under a decree in this case until further order of this court.' On the 14th of April, 1887, a decree was made in which the following recital appears: 'And it appearing to the court that under a contract of November 8, 1865, mentioned in said amended answer and special replication, that the plaintiff, George R. C. Floyd, is entitled to one-fourth of the tract of land named therein in the plaintiff's bill, and the heirs of A. S. Gray, deceased, are entitled to three-fourths of said land, to-wit, the Burning Spring tract bought by A. S. Gray of James Step and about 15 acres bought by said Gray of Isaac Brewer, and that title to said land is still in said James Step, party defendant to this suit, excepting as to the 15 acres, and the title to the 15 acres is in the heirs of the said Gray, party defendant hereto; and it further appearing to the court that the land should be partitioned between the owners of the land as aforesaid.' The decree proceeds to direct a partition.

"The position is taken by the defendant that this decree embraces the tract in dispute. If that be so, then at most the plaintiffs can recover only the one-fourth interest, since the title which their grantor derived from Floyd was not acquired until August, 1887, after this decree of the court in April. The plaintiffs having shown a perfect title in Floyd from the state, when the defendant asserts that a court of equity adjudged him to be entitled to only one-fourth interest, they assume the burden of showing that the court incorporated such a mistake in its decree by clear and satisfactory evidence. As I construe the proceedings in the equity case of Floyd v. Gray, Straton did undertake to embrace the tract of 135 acres in his conveyance, and had it surveyed as part of the land; but this conveyance was never confirmed, and it did not estop Floyd from holding the entire fee under his title previously acquired from an entirely independent source. The deed did not have the effect of conveying anything which the court did not authorize the commissioner to convey, and it was a nullity in so far as it went beyond the authority conferred on the commissioner, which was to convey the land described in the bill. Ronk v. Higgenbotham, 54 W. Va. 137, 46 S. E. 128. It is true the court in the order of September 6, 1882, does enjoin Floyd from disposing of the land conveyed to him by Special Commissioner Straton 'under a decree in this cause.' But even this could not have had the effect of enjoining Floyd from conveying land which he acquired otherwise, and which Straton

Digitized by Google

had no authority from the court to convey. The language used by the court in its decree of April 14, 1887, in describing the land in which it held that Floyd had only one-fourth interest, as the Burning Springs tract 'bought by A. S. Gray of James Step,' seems to exclude the 135-acre tract. There is no evidence that that tract was ever bought by A. S. Gray of James Step, or that James Step ever owned it.

"There are other considerations supporting the conclusion that the court was not dealing with the 135 acres when it adjudged that Floyd was entitled to only one-fourth interest. In this very confusing record there are also some considerations leading to the opposite conclusion. On the whole, according to the decided preponderance of evidence, I am of the opinion that the tract of 135 acres here in dispute was not embraced in the land in which the court decreed that George R. C. Floyd had only one-fourth interest. My conclusion is that the plaintiff is entitled to recover the land in dispute, having established a complete legal title thereto."

It is well settled that findings of fact by the court below will not be disturbed where the evidence is conflicting. In this instance we think the evidence is such as to establish beyond controversy the state of facts found by the court below. We are likewise of opinion that the conclusions of law as reached by the court below were proper and in harmony with the authorities; but inasmuch as we have quoted the opinion of the court below in full, which disposes of these points, as we think, properly, we do not deem it necessary to cite any additional authorities in support thereof, nor to enter into a discussion of the same further than to say that we think that the judgment of the lower court is proper and should be

Affirmed.

(249 Fed. 145)

WAGNER et al. v. CENTRAL BANKING & SECURITY CO.*

(Circuit Court of Appeals, Fourth Circuit. January 9, 1918.)

No. 1542.

1. ASSIGNMENTS ⟹126—ACTIONS BY ASSIGNEE—DEFENSES.

All defenses and set-offs available against an assignor of a chose in action are available against his assignee.

2. BANKS AND BANKING ⟹117—TRANSACTIONS BETWEEN BANKS—REPRESENTATION BY OFFICERS.

Officers of bank A executed their individual notes to each other, which they indorsed and, attaching a guaranty by the bank, discounted them with a correspondent bank, B. Although bank A did not own nor indorse the notes, it was agreed that their proceeds should be placed to its credit by bank B, and that the greater part of such credit should remain untouched until the notes were paid. The greater part of the amount of the notes was subsequently charged to the account of bank A. The only entry of the transaction on its own books was the charge of the amount of the deposit to bank B, and the same amount was placed to the credit of the individual officers or others designated by them. The guaranty of the notes was not authorized by the directors of bank A, and sufficient appeared in the transaction to charge bank B with notice that it was for the personal benefit of the makers of the notes and not of their bank. *Held* that, on a subsequent settlement, bank B could not enforce such charges against bank A, which derived no benefit therefrom, on the principle that, where one of two parties must suffer from the fraud of a

---

⟹For other cases see same topic & KEY-NUMBER in all Key-Numbered Digests & Indexes

*Rehearing denied May 7, 1918.

Digitized by Google

third, the loss must fall on him who by his imprudence or co-operation enabled such third party to commit the fraud.

3. BANKS AND BANKING ⟹109(1)—REPRESENTATION OF BANK BY OFFICERS—INDORSEMENT OR GUARANTY.

An officer of a bank without express authority from the directors has no power to bind the bank by an accommodation indorsement or guaranty, and an attempted guaranty of notes that the bank has never owned is illegal, unless for the benefit of the bank in the conduct of its business.

4. BANKS AND BANKING ⟹117—REPRESENTATION OF BANK BY OFFICERS—INDIVIDUAL INTEREST OF OFFICER.

There is a dead line between the area of official representation of a bank by its officers and the area of their personal interest, and when they cross that dead line, to the knowledge of one with whom they are dealing, they leave behind all power of representation.

Cross-Appeals from the District Court of the United States for the Northern District of West Virginia, at Parkersburg; Alston G. Dayton, Judge.

Suit in equity by the Central Banking & Security Company against P. E. Wagner, receiver of the First National Bank of Sutton, W. Va., and another. From the decree, all parties appeal. Reversed.

Connor Hall and D. C. T. Davis, Jr., both of Charleston, W. Va. (Davis, Davis & Hall, of Charleston, W. Va., on the brief), for appellants and cross-appellees.

C. D. Merrick and B. M. Ambler, both of Parkersburg, W. Va., for appellee and cross-appellant.

Before PRITCHARD, KNAPP, and WOODS, Circuit Judges.

WOODS, Circuit Judge. On January 15, 1914, a contract was made between the Farmers' Bank & Trust Company of Sutton, W. Va., and the First National Bank of Sutton, which was intended as a transfer of the business and the commercial assets of the Farmers' Bank to the First National Bank. By the contract the Farmers' Bank turned over to the First National Bank cash, notes, and other assets to the amount of $198,506.31. The First National Bank assumed liability for the Farmers' Bank's deposits, balances, and notes due to other banks to the amount of $203,970.02. For the difference, $5,463.71, between the liabilities assumed and the assets turned over the Farmers' Bank gave its note. Assets and liabilities were carefully specified and scheduled. Among the assets of the Farmers' Bank so assigned was a balance of $7,694.94 appearing on its books as due to it by the Central Banking & Security Company of Parkersburg, W. Va. For this balance the Farmers' Bank made a draft on the Central Bank in favor of the first National Bank. The Central Bank had at this time a note of H. H. Dean and a note of T. G. Dean, his brother, each for $5,000 indorsed in the name of the Farmers' Bank by H. H. Dean as treasurer which it had discounted, placing the proceeds to the credit of the Farmers' Bank. As a condition of paying the draft of $7,694.94 by transferring the credit from the Farmers' Bank to the First National Bank, the Central Bank stipulated that these notes should be replaced by similar notes indorsed by the First National Bank, under

Digitized by Google

authority of a resolution to be adopted by the board of directors of the First National Bank. These Dean notes did not appear at all on the books of the Farmers' Bank; and the paper purporting to be a copy of a resolution authorizing discounts with the Central Bank was fictitious, the Central Bank accepting the certificate of authenticity of Dean alone as vice president to the fictitious resolution. On the faith of this fictitious resolution the Central Bank charged to the First National Bank the Dean notes for $10,000, purporting to be indorsed by the Farmers' Bank, and credited to the First National Bank the new Dean notes, purporting to be indorsed by the First National Bank.

The First National Bank continued business with the Central Bank until August, 1914, when it failed and P. E. Wagner was appointed receiver. At the date of suspension there was a balance appearing on the books of the First National Bank in its favor against the Central Bank of $9,161.91. This balance the Central Bank refused to pay, alleging a liability of the First National Bank to it as indorser on several notes, two of them being notes of H. H. Dean for $5,000 and $500, and one of them a note of T. G. Dean for $5,000. In July, 1915, P. E. Wagner, as receiver of the First National Bank, brought an action to recover the alleged balance of $9,161.91 due by the Central Bank. Thereafter, on September 1, 1915, the Central Bank instituted this suit in equity to enjoin the action of the receiver, alleging that by reason of the liability of the First National Bank as indorser of the notes of the Deans and of other persons, the First National Bank would be indebted to it on settlement to the amount of $3,612.90. Confirming the report of the master in all respects, the District Court entered a decree in favor of the Central Bank against the First National Bank for $807.28. Both parties appeal.

The claim of the receiver now is that a balance of $6,891.11 should have been found in favor of the First National Bank against the Central Bank, after allowing all proper credits and charges. The claim of the Central Bank is that the balance found in its favor should have been $3,108.09.

[1, 2] The mere fact that the First National Bank, in acquiring the chief assets of the Farmers' Bank on January 15, 1914, purchased the balance of $7,694.94 appearing on its books against the Central Bank, without notice of defenses or set-offs against the Farmers' Bank, did not deprive the Central Bank of the benefit of such defenses or set-offs. All defenses and set-offs available against an assignor of a chose in action are available against his assignee. New York, etc., Bank v. Massey, 192 U. S. 138, 24 Sup. Ct. 199, 48 L. Ed. 380. The First National Bank having acquired by the assignment of the balance all the rights, both legal and equitable, of the Farmers' Bank, and nothing more, the main question upon which the case hinges is what was the real balance in favor of the Farmers' Bank against the Central Bank on January 15, 1914, the date on which it was assigned to the First National Bank. The effort to arrive at this balance requires analysis of somewhat complex transactions of earlier dates.

H. H. Dean was treasurer of the Farmers' Bank, and on January 15, 1914, when that institution transferred its active business and assets, he became vice president of the First National Bank. He was the active

Digitized by Google

managing officer of each institution; the other directors and stockholders relying largely upon him. He was faithless to both trusts.

In November, 1909, the Central Bank, at the request of Smith, Mollohan, and Dean, all officers of the Farmers' Bank, discounted a note of Mollohan for $5,000, payable on demand to Smith, and indorsed by him, and a note for $4,450 of Smith and Mollohan, payable on demand to themselves, and indorsed by them, to which was attached as collateral 50 shares of stock of the Farmers' Bank. These notes were not indorsed by the Farmers' Bank, and there was nothing to indicate that they had ever been its property. Nevertheless, the Central Bank took them on a guaranty made in the name of the Farmers' Bank by Smith, and by Dean as treasurer and Mollohan as vice-president. These persons also undertook to contract further in the name of the bank that the proceeds should be credited to the Farmers' Bank, and that the notes might be charged to its account at any time, and that at least $7,500 of the credit should remain untouched until the notes were paid. It was also agreed that the Central Bank should charge 6 per cent. on the discount and allow 3 per cent. on the balance. There was no resolution of the board of directors authorizing the use of the Farmers' Bank's name in such a transaction as guarantor or otherwise. The whole amount, $9,450, was credited to the Farmers' Bank; the only entry on the books of the Farmers' Bank relating to the transaction was a corresponding charge against the Central Bank, "Notes, $9,450," which was disposed of at Mollohan's direction by crediting $2,500 to the account of Mollohan and the remainder to two trust companies. As no indebtedness of the Farmers' Bank to Mollohan or to these trust companies appears justifying these entries, the inference follows that the proceeds of the notes were thus disposed of for the private purposes of Smith, Mollohan, and Dean, as the evidence shows was clearly the design of the transaction.

On September 1, 1911, the Smith and Mollohan notes were canceled by a new note of S. M. Smith for $2,225 and a charge made against the Farmers' Bank for $7,225. These transactions were admittedly out of the usual course of business. Langfitt, the treasurer of the Central Bank, when he afterwards became uneasy as to the solvency of the makers of the notes, earnestly requested payment or a resolution of confirmation by the directors of the Farmers' Bank, saying in his letter to Dean, treasurer, of August 19, 1911:

> "In justice to yourself, you should either secure the payment of these notes, or secure renewals, or rather new notes for same, and pass them through your books as regular rediscount matter, as it is unusual with banks to guarantee for their customers without specific instructions from their board of directors."

[3] The absence of the indorsement of the Farmers' Bank showed that the notes had never been its property. The attempted guaranty of notes that a bank has never owned is not only unusual, but illegal, except for the benefit of the bank in the conduct of its business. An officer of a bank, without express authority from the directors, has no power to bind the bank by an accommodation indorsement or guaranty. West St. Louis Savings Bank v. Shawnee County Bank, 95 U. S. 557, 24 L. Ed. 490. There was nothing before the Central Bank,

Digitized by Google

and there is nothing in the record, to show that the Farmers' Bank needed funds, or was unable to raise them on its own resources, or that there was any necessity for it to carry any fixed balance with the Central Bank to meet notes which it had never owned.

The application for the loan was made by Smith individually, and not as an officer of the bank, and he pledged his own stock to secure it. The letter of Dean, as treasurer, to the Central Bank, guaranteeing the notes, recites that they were discounted for Smith and Mollohan; thus indicating clearly that the Farmers' Bank was being used merely as an instrumentality to obtain money from that bank for its officers. The Central Bank thus had full notice from the whole course of the transaction that the discount was not for the benefit of the Farmers' Bank, but of Smith, Mollohan, and Dean, who undertook to bind it. It is evident, therefore, that if the Central Bank had paid the proceeds of the notes to these persons, it could not have held the Farmers' Bank liable on the attempted guaranty. West St. L., etc., Bank v. Shawnee, etc., supra; First National Bank v. Drovers' & Mechanics' Nat. Bank, 244 Fed. 135, 156 C. C. A. 563 (4th Cir. July 12, 1917).

But it is earnestly insisted that, since the Central Bank gave the Farmers' Bank credit for the proceeds of the note, the balance $7,-694.94 appearing on its books in favor of the Farmers' Bank being a result of that credit, neither the Farmers' Bank nor its assignee, the First National Bank, could recover this balance without assuming liability for the notes which produced it. The general rule is well settled that a bank cannot take the benefit of an illegal or fraudulent transaction of its officer, and repudiate the obligation out of which the benefit arose. National Bank v. Petrie, 189 U. S. 423, 23 Sup. Ct. 512, 47 L. Ed. 879; People's Bank v. National Bank, 101 U. S. 181, 25 L. Ed. 907; Rankin v. City National Bank, 208 U. S. 541, 28 Sup. Ct. 346, 52 L. Ed. 610. But the question here is deeper than that. As we have seen, the Central Bank was chargeable with notice that Smith, Mollohan, and Dean negotiated the notes for the purpose of raising money for themselves. This design could only be accomplished by drawing from the Farmers' Bank the amount which had been credited by the Central Bank to the Farmers' Bank. That this was the natural and inevitable sequence of the transaction must have been evident to the officers of the Central Bank. It was in this transaction that the loss to the Farmers' Bank occurred. This loss runs through the entire account, and the case turns on the responsibility of the Central Bank for it.

Doubtless the officers of the Central Bank were guiltless of any formed purpose to defraud the Farmers' Bank. They no doubt expected both banks to be saved harmless by the payment of the notes by the makers. But when the Central Bank was put on notice of the scheme of the officers of the Farmers' Bank to use its guaranty for their individual benefit and entered into that scheme, the Central Bank became party to it, and took on itself, as a participant in the transaction with notice of its purpose, all the risk of resulting loss to the Farmers' Bank into whose affairs it unwarrantably entered for the benefit of its officers. The transaction must be looked at in its en-

Digitized by Google

tirety and the consequent loss must fall on all the wrongdoers severally and jointly, to the exemption of the Farmers' Bank, whose rights they undertook to invade.

[4] Where one of two parties must suffer from the fraud of a third party, even if both are innocent, the loss must fall on him who by his imprudence or co-operation enabled such third party to commit the fraud. Western Union Cold Storage Co. v. Bankers' Natl. Bank, 176 Ill. 260, 52 N. E. 30; Western Union Tel. Co. v. Schriver, 141 Fed. 538, 72 C. C. A. 596, 4 L. R. A. (N. S.) 678; 12 Rul. Cas. L. 401. Attributing to Dean, Mollohan, and Smith full power to manage the credits of the bank of which they were officers, the instant they proposed a breach of trust by using the bank's name for their own benefit, and the Central Bank accepted the proposition, Dean, Mollohan, and Smith were stripped of their representative character and their power to bind the Farmers' Bank. By its first step taken in the matter thereafter the Central Bank tied itself to Smith, Mollohan, and Dean as a participant in their breach of trust. There is a dead line between the area of personal interest and the area of official representation. When the officers of the Farmers' Bank crossed that dead line to the knowledge of the Central Bank they left behind all power of representation. Thereafter the Central Bank and the officers of the Farmers' Bank were jointly and severally responsible for any damage which resulted to the Farmers' Bank from their unwarranted dealing with its credit and money.

Applying this rule, since the Central Bank had enabled Smith, Mollohan, and Dean to appropriate $9,950 of the Farmers' Bank's money by means of an entry on its books in favor of the Farmers' Bank for that amount, it was bound by that entry, and could not afterwards discharge itself by charging to the Farmers' Bank the notes of Smith and Mollohan for which the Farmers' Bank was never liable. In other words, Mollohan having paid $2,225 of the $9,550, the net loss to the Farmers' Bank was $7,225 and interest, and this loss the Central Bank must bear. It is true that the burden of showing the fraud—that is, that the name of the Farmers' Bank was used for the benefit of Smith, Mollohan, and Dean, and that the Central Bank entered into the transaction with notice of that intention—was on the receiver. Rankin v. Chase Bank, 188 U. S. 557, 23 Sup. Ct. 372, 47 L. Ed. 594. But as we have seen, the receiver discharged that burden. He showed further that the proceeds of the notes were misapplied by putting them to the credit of Mollohan and to two trust companies at Mollohan's instance. When this proof was made, the obligation then fell upon the Central Bank to show that the proceeds of the notes so apparently misapplied were actually used for the benefit of the Farmers' Bank. Western National Bank v. Armstrong, 152 U. S. 346–351, 14 Sup. Ct. 572, 38 L. Ed. 470. This obligation the Central Bank failed to discharge.

It follows that in arriving at the real balance due to the Farmers' Bank by the Central Bank, the charge to the Farmers' Bank of $7,225 and $97.65, interest thereon, aggregating $7,322.65, representing the unpaid portion of the notes of Smith and Mollohan, must be canceled.

Digitized by Google

At and after the time that the Central Bank charged to the Farmers' Bank $7,322.65 of the principal and interest of the Smith and Mollohan notes, Dean discounted at the Central Bank two notes, one of himself and one of his brother, T. G. Dean, each for $5,000, indorsing them in the name of the Farmers' Bank, as already stated. In this instance, also, the correspondence and all the circumstances furnished ample notice to the Central Bank that the discount was for the benefit of Dean and not of the Farmers' Bank. The discount seems however, to have been made for the purpose of renewing the credit of the Farmers' Bank on the books of the Central Bank which had disappeared, when the Mollohan and Smith notes were charged, to the extent of $7,322.65, and concealing the misappropriation of the funds in that transaction. The net proceeds were placed to the credit of the Farmers' Bank and there is no sufficient evidence in the record that Dean on this occasion and on the faith of these notes withdrew from the Farmers' Bank any funds for his own use. These notes were renewed from time to time, the last renewal being under the indorsement of the First National Bank which Dean essayed to make as vice president. Corresponding debits and credits were made at the renewal of the notes. This being so, both the indorsement in the name of Farmers' Bank, and the First National Bank on the notes, and also the credits given for their net proceeds, should be canceled. The Central Bank having notice that they were made for the benefit of Dean and not for the benefit of the Farmers' Bank or the First National Bank cannot set them up. The Farmers' Bank and the First National Bank not having shown any loss on account of them cannot claim their proceeds in the credit which they produced.

The evidence is too plain for discussion that the Central Bank discounted the other note of $500 for Dean individually with knowledge that the First National Bank was to derive no benefit from it, and that the District Court was right in refusing to charge it to the First National Bank. The result is that the decree of the District Court should be in favor of P. E. Wagner, receiver, for such balance as may remain in favor of the First National Bank, as assignee of the Farmers' Bank, after disallowing the charge of $7,322.65 entered by the Central Bank against the Farmers' Bank on September 1, 1911.

The decree of the District Court is therefore reversed.

Digitized by Google

(249 Fed. 152)

SKINNER, Collector of Internal Revenue, v. UNION PAC. COAL CO.

(Circuit Court of Appeals, Eighth Circuit. February 23, 1918.)

No. 4957.

INTERNAL REVENUE ⟹7—INCOME TAX ON CORPORATIONS—"ACCRUING" OF INCOME.

An annual dividend received by a corporation on the stock of another corporation is subject to the tax imposed by Income Tax Act Oct. 3, 1913, c. 16, § 2, G(a), 38 Stat. 172, for the calendar year in which it was declared and paid, as income "accruing" during such year, although half of the profits out of which the dividend was paid accrued prior to the passage of said Income Tax Act.

[Ed. Note.—For other definitions, see Words and Phrases, First and Second Series, Accrue.]

In Error to the District Court of the United States for the District of Colorado; Robert E. Lewis, Judge.

Action by the Union Pacific Coal Company against Mark A. Skinner, Collector of Internal Revenue. Judgment for plaintiff, and defendant brings error. Reversed, with directions to dismiss complaint.

John A. Gordon, Asst. U. S. Atty., of Denver, Colo. (Harry B. Tedrow, U. S. Atty., of Denver, Colo., on the brief), for plaintiff in error.

John Q. Dier, of Denver, Colo. (N. H. Loomis, of Omaha, Neb., C. C. Dorsey, of Denver, Colo., and Henry W. Clark, of New York City, on the brief), for defendant in error.

Before CARLAND, Circuit Judge, and AMIDON and MUNGER, District Judges.

AMIDON, District Judge. The Union Pacific Coal Company brought this suit against the defendant, Skinner, as collector, to recover a tax collected upon its income for the year 1913, and paid by it under protest.

The Union Pacific Coal Company is the owner of all the capital stock of the Superior Coal Company. The latter, on June 18, 1913, declared, and on June 19 paid to plaintiff, a dividend arising out of the profits of its business for the fiscal year extending from June 30, 1912, to June 30, 1913, of 50 per cent., amounting to $500,000. In March, 1914, plaintiff made its return under the Income Tax Law for the calendar year 1913, but instead of including in its income the entire dividend, included only one half, or $250,000, stating that the other half was not income of the calendar year 1913, for the reason that it was earned by the Superior Coal Company during the latter half of the calendar year 1912. The Commissioner of Internal Revenue amended plaintiff's return, so as to include the $250,000, and levied a tax of 1 per cent. thereon. Plaintiff paid the tax under protest, and brought this action to recover it back. Defendant demurred to the complaint setting up the above facts. The court overruled the demurrer, and, the defendant declining to answer, judg-

⟹For other cases see same topic & KEY-NUMBER in all Key-Numbered Digests & Indexes

Digitized by Google

ment was entered against him in the sum of $3,052.30, to reverse which he brings error.

The case must be determined by deciding whether the dividend constituted income of the Union Pacific Coal Company "arising or accruing" within the calendar year ending December 31, 1913. The argument of plaintiff really comes to this: That the dividend did not accrue to it in 1913, because the profits of the Superior Coal Company, out of which it was paid, did not all accrue to that company from its business during the calendar year 1913, but half of it accrued in 1912. This statement of the question indicates its decision. The Income Tax Law does not deal with the period during which a corporation which pays a dividend accumulates the profits out of which the dividend is paid. It is concerned with the income of the corporation receiving the dividend. Viewed in that light, the dividend accrued to the Union Pacific Coal Company in the year 1913, and all of it was taxable. We think annual dividends, paid out of the profits of the business of a corporation declaring the same, do not accrue to a stockholder until they are declared and paid by the paying corporation. Until that is done they represent mere profits of the corporation earning the same, and that corporation may, in the exercise of a proper discretion, apply the same as it sees fit. The stockholder does not acquire any interest in the fund until the dividend is paid.

Subdivision (a) of subsection G of section 2 of the act (38 Stat. 172) provides that the tax shall be levied "upon the entire net income arising or accruing from all sources during the preceding calendar year." Counsel urges that the words "arising or accruing" do not mean the same as "received." The statute itself shows the contrary, for subdivision (b) of subsection G provides that the "net income shall be ascertained by deducting from the gross amount of the income of such corporation * * * *received* within the year from all sources" certain specified allowances. This comparison shows that the net income "arising or accruing" to the corporation is to be ascertained by deducting from the gross income "received" by the corporation the specified allowances. It follows necessarily that in the judgment of the framers of the act the words "arising or accruing" are equivalent to the word "received." The only question left, therefore, is whether an annual cash dividend paid out of the annual profits of a corporation is income of the stockholder for the year in which he receives it or is to be treated as his income as the profits out of which it is paid are accumulated from month to month by the corporation which pays the dividend. We have not been cited to any decision holding that a dividend is income of the stockholder as fast as the profits out of which it is paid are accumulated by the corporation. On the other hand, the courts have uniformly held that the stockholder acquires no interest whatever in such a dividend until it is paid.

Plaintiff relies upon Lynch v. Turrish, 236 Fed. 653, 149 C. C. A. 649. That case is clearly distinguishable. The corporation there involved was not engaged in active business. It purchased in 1903 timber land which steadily increased in value. None of the increase, however, occurred after March 1, 1913. The company sold its land in 1913, and distributed money realized from the sale ratably among

Digitized by Google

its stockholders. Lynch, the collector, levied a tax upon Turrish, one of the stockholders, for that part of the dividend paid by the corporation which represented the increment in the value of its property. The question before the court was whether this sum was such a "dividend" as came within the term "income" under the income law. This court ruled that it was not; that the division which was made among the stockholders was a division, not of profits but of the capital of the corporation.

A case more nearly in point for plaintiff is Towne v. Eisner, 245 U. S. 418, 38 Sup. Ct. 158, 62 L. Ed. 372, decided by the Supreme Court of the United States January 7, 1918. There a corporation transferred $1,500,000 from a surplus fund which had been set aside as surplus, before January 1, 1913, to capital account, and then in exchange for this fund issued stock for a like amount, and distributed the same as stock dividends to stockholders of record December 26 of that year. The collector levied a tax upon the plaintiff, who received a stock dividend of this character, the same as if it had been an ordinary annual cash dividend. The Supreme Court ruled that under the facts of that case the fund which was distributed was capital, and not income. The court says:

> "We cannot doubt that the dividend was capital as well for the purposes of the Income Tax Law as for distribution between tenant for life and remainderman. * * * What has happened is that the plaintiff's old certificates have been split up in effect and have diminished in value to the extent of the value of the new."

The entire reasoning of the opinion rests upon that ground.

As pointed out by Judge Sanborn in the Turrish Case, 236 Fed. 660, 149 C. C. A. 649, and by the Sixth Circuit in Doyle v. Mitchell Bros. Co., 235 Fed. 686, 687, 688, 149 C. C. A. 106, L. R. A. 1917E, 568, the distinction running through all the cases is this: Is the fund paid to the stockholder a division of profits earned by the corporation, or a division of its capital? If the former, it is income; if the latter, it is not income, but a partition of property or capital. By conceding, as plaintiff does, that half of its dividend was income, plaintiff puts itself out of court, for the concession is an admission that the entire dividend was income, and not capital.

The judgment is reversed, with directions to dismiss the complaint.

Digitized by Google

(249 Fed. 155)

In re DUNCAN.

(Circuit Court of Appeals, Fourth Circuit. February 8, 1918.)

No. 1609.

MANDAMUS ⟹4(1)—GROUNDS—REMEDY BY APPEAL.

A writ of mandamus will not be granted to require a District Judge to correct alleged errors occurring on the trial of a cause, where they can be brought up for review by appeal.

In the matter of the application of Cloyd H. Duncan for leave to file a petition for a writ of mandamus, directed to Hon. Alston G. Dayton, District Judge of the United States for the Northern District of West Virginia. Denied.

Before PRITCHARD, KNAPP, and WOODS, Circuit Judges.

Cloyd H. Duncan, in pro. per.

PRITCHARD, Circuit Judge. In the above-entitled matter Cloyd H. Duncan, complainant in the court below, presents a petition in which he states that his attorney is not a member of the bar of this court. The petitioner seeks to have this court issue an alternative writ of mandamus, directing the District Judge for the Northern District of West Virginia to correct alleged errors at law in the trial of a cause. The questions which petitioner seeks to have us pass upon can be considered by this court if the cause should be brought here on appeal, provided such questions are raised by a proper assignment of error. No ground is stated for interfering with the District Judge in the discharge of his duties upon the showing made. Therefore the application for leave to file a petition for a writ of mandamus is denied.

(249 Fed. 155)

DIAMOND PATENT CO. v. WEBSTER BROS.

SAME v. MURRAY et al.

(Circuit Court of Appeals, Ninth Circuit. February 18, 1918.)

No. 2997.

1. PATENTS ⟹328—INFRINGEMENT—GLASS SHOWCASE.

The Weber patent, No. 801,944, for a glass showcase having the plates separated by a cushion of felt or other elastic material to prevent the vibration of one plate from being imparted to the conjoining plate, *held* not infringed.

2. WORDS AND PHRASES—"PLASTIC"—"ELASTIC."

The words "plastic" and "elastic" have entirely different meanings. "Plastic" applies to a substance capable of being molded and pressed into form, while "elastic" applies to a substance having the property of returning or springing back to its original form after being disarranged by pressure or applied force.

[Ed. Note.—For other definitions, see Words and Phrases, First Series, Elastic; Second Series, Plastic.]

⟹For other cases see same topic & KEY-NUMBER in all Key-Numbered Digests & Indexes

Digitized by Google

3. PATENTS ⟹324(5)—SUIT FOR INFRINGEMENT—REVIEW ON APPEAL.
Where the trial court, in an infringement suit, has had the advantage of examining the alleged infringing article, an appellate court, without such advantage, will not disturb the conclusion reached, unless clearly against the weight of the evidence.

Appeal from the District Court of the United States for the Southern Division of the Southern District of California; Oscar A. Trippet, Judge.

Suits in equity by the Diamond Patent Company against Webster Bros., a corporation, and against C. F. Murray and others. Decrees for defendants, and complainant appeals. Affirmed.

J. J. Scrivner, of San Francisco, Cal., and George E. Harpham, of Los Angeles, Cal., for appellant.

M. G. Gallaher, of Fresno, Cal., for appellees.

Before GILBERT and HUNT, Circuit Judges, and WOLVERTON, District Judge.

WOLVERTON, District Judge. These cases were consolidated in the court below for trial. Both are for injunction, one to restrain the manufacture and the other the use of a patented invention. The question presented is one of infringement. The patent pertains to glass showcases, and consists in the means of fastening one glass surface to another by use of an elastic substance, composition, or contrivance, so as to prevent breakage through communication of vibration of the glass plates. The conception is the insertion of a felt strip between the glass surfaces, bound thereto by cement applied to both sides of the felt, of such consistency and adaptability that it does not permeate the felt, forming a skin upon either side, thus producing a cushion having an elastic or resilient property, which serves to absorb vibration of the plates, and prevents its communication from one to another, and likewise breakage of the plates themselves. It is unnecessary to pursue the details of the invention further. A particular description of it may be had by reference to Diamond Patent Co. v. S. E. Carr Co., 217 Fed. 400, 133 C. C. A. 310.

[1] The claims are two in number, and are as follows:

"1. A structure comprising a plurality of glass plates, the edges of which are spaced from the adjacent plates, a felt cushion filling the space between the adjoining plates, the plates being cemented to the felt, each plate being adapted to freely vibrate in its natural plane of vibration, and prevented by the felt cushion from imparting its vibration to the adjacent plates.

"2. A structure comprising a plurality of glass plates, an unconfined edge of one plate nearly but not quite meeting another plate also with unconfined adjacent edge, an elastic material filling the space thus existing between the nearest adjacent surfaces of the plates, said plates being attached to the elastic material, whereby the plates by reason of their unconfined edges and the intervening elastic material can each vibrate or move in any direction independently."

The important feature of claim 1, so far as it pertains to the present controversy, is the felt cushion filling the space between the adjoining plates, and so adapted as to prevent the vibration of one plate from

⟹For other cases see same topic & KEY-NUMBER in all Key-Numbered Digests & Indexes

Digitized by Google

being imparted to the conjoining plate. The distinguishing feature of claim 2 is that an elastic material for filling the space is substituted for the felt and its combination. There is testimony in the record tending to show that plaintiff has a compound of ground felt, combined with a special quality of cement, that has and retains the property of elasticity or resiliency, which absorbs vibration in the same way as the felt contrivance, thus forming a like cushion between the surface contact of the glass plates. It is claimed for this compound that it comes within the scope of the second claim, but, whether it does or not, the present controversy must be determined solely upon the evidence adduced at the trial.

[2] The witnesses for plaintiff, namely, Fred Weber, the patentee, and James P. Shaffer, have applied certain tests to glass showcases, manufactured by one of the defendants and now being used by the other, which they seem to think prove that the composition used in these showcases to unite the glass plates at their surface bearings possesses the same property of elasticity and resiliency as the invention of Weber, now the property of plaintiff. One of the tests consisted in inserting a knife blade or some sharp instrument between the plates, thus penetrating the compound for uniting the plates; and it is asserted that the compound was found to be soft, or plastic, and yielding, and to possess elasticity and resiliency, thus performing the same function as the Weber invention. These witnesses, however, confuse the terms "plastic" and "elastic," which do not mean the same thing at all. "Plastic" applies to a substance capable of being molded and pressed into form, while "elastic" applies to a substance having the property of returning or springing back to its original form, after being disarranged by pressure or applied force. The former becomes dead matter as its form is changed, while the other has the property of resuming its natural shape. The latter has resiliency; the other has not. Another test was to observe whether the compound would yield under pressure. If it did, the witnesses seemed to think that it was plastic or elastic, without distinction as to the signification of the terms.

Upon the other hand, defendants produced evidence to the effect that the substance used for uniting the glass plates in some of the cases consisted in the combination of a very narrow strip of felt with a cement that permeated the felt and overlaid the edges, and, when applied, became hard and practically homogeneous, thus destroying the resiliency of the felt. In other cases, the substance used was cement alone, which soon became rigid after use, and was without elasticity or resiliency. It was further claimed for the defendants that elasticity in the substance used for uniting the plates was of no advantage in preventing breakage, and that a substance which, while plastic when applied, became rigid when in place, was useful in the art, and was not attended with breakage of the glass after use. Tests were made by defendants' witnesses, who claim to have found that, while some of the substance used in the showcases was plastic and yielding, yet it was not elastic. Some of it, they say, was rigid and unyielding. The trial judge, however, with all the evidence before him, personally

Digitized by Google

inspected the showcases, and eventually denied the plaintiff's contention. While he rendered neither oral nor written opinion, he gave a decree dismissing the complaints. From all this we must presume that the court was of the opinion that the substance used in these showcases for uniting the glass plates did not infringe the plaintiff's patent, thus deciding the fact in issue.

[3] In such a case, the trial court having the advantage of seeing and especially examining the material which it is claimed infringes, an appellate court, without such advantage, will not disturb the conclusion reached, unless it appears clearly that the finding is against the obvious weight of the testimony.

We find no reason for disturbing the decree, and therefore affirm it.

(249 Fed. 158)

FULLER et al. v. REED et al.

(Circuit Court of Appeals, First Circuit. June 16, 1917.)

No. 1209.

1. APPEAL AND ERROR ⟹1009(1)—REVIEW—FINDING OF FACT.
   Where the witnesses appeared before the judge of the lower court, a finding of fact in an equity suit will not be disturbed on appeal, unless it clearly appears to be wrong, because of the superior opportunity of the lower court to determine the question of the witnesses' credibility.
2. PATENTS ⟹200—CANCELLATION OF ASSIGNMENT—EVIDENCE—SUFFICIENCY.
   In a suit to avoid an assignment of a patent on the ground of fraud, evidence *held* insufficient to establish the alleged fraud.

Appeal from the District Court of the United States for the District of Massachusetts; Frederic Dodge, Judge.

Bill by Charles D. Fuller and others against Philip L. Reed and others. From a decree dismissing the bill (229 Fed. 737), complainants appeal. Decree affirmed.

Thorndike Saunders, of New York City, for appellants.

Philip C. Peck, of New York City (J. Sidney Stone, of Boston, Mass., on the brief), for appellees.

Before BINGHAM, Circuit Judge, and ALDRICH and MORTON, District Judges.

MORTON, District Judge. [1] The misrepresentations relied on by the complainant to avoid the assignment from Thurston are alleged to have been made orally by Calder to Thurston at the interview between them. The only persons in a position to testify to what then occurred were Thurston, Calder, and Thurston's niece, Rose Thurston. All three were examined and cross-examined before the learned judge who heard the case in the District Court. The only substantial question before us is whether his refusal to accept the testimony of Thurston and Rose Thurston (which in the vital parts was contradicted by Calder), as establishing fraud, was erroneous. He had so much better opportunity than this court to judge correctly the accuracy and credibility of the various witnesses that, on familiar and established prin-

Digitized by Google

ciples, his conclusions will not be disturbed unless they are clearly wrong. Trujillo & Mercado v. Rodriguez, 233 Fed. 208, 212, 147 C. C. A. 214 (C. C. A. 1st Cir.).

[2] Thurston was, when he testified, nearly 80 years old, and of greatly impaired health. His appearance and manner on the stand were obviously of unusual importance in considering his testimony. Rose Thurston does not claim to have been a participant in the conversation between her uncle and Calder; she had no pecuniary interest in the matter under discussion, and was not familiar with it; she was admittedly out of the room part of the time; and her attention was not sharply recalled to the talk until almost 2 years after it occurred. The difficulties which actual participants in a conversation experience in correctly restating it after a considerable lapse of time is well known. The difficulty and uncertainty are greatly increased in the case of a person not directly interested, not participating, and not continuously present during the whole talk. There were important differences between the account given by Thurston and his niece of the interview between him and Calder, and that given by Calder. The opinion of the learned judge in the District Court shows that he considered the testimony with the most painstaking care and was not satisfied that material and fraudulent misrepresentations were made by Calder.

We cannot say that he was clearly wrong in so deciding. While several things suggest that Calder's testimony ought to be received, as it was received, with caution and with sharp scrutiny, there are circumstances which tend to disprove the complainant's assertions of fraud. The most important ones are noticed in the opinion of the District Court. Moreover, the alleged misrepresentation that "Calder came from Fuller," or "was sent by Fuller" (which is the one now principally relied on in argument by the complainant), does not touch either the value of the patent, or the consideration paid therefor; in other words, it did not directly enter into the bargain which Thurston made. There is no evidence, and indeed it is not claimed, that Calder represented himself as the agent of Fuller. Thurston admittedly understood which patent he was selling, and received the full agreed price.

The alleged misrepresentations by Calder as to the length of time which the patent had to run were disposed of by the trial judge's finding that a copy of it was shown to Thurston at the interview—a finding which is by no means so plainly erroneous that we can reject or disregard it. The remaining misrepresentations charged by the complainant relate, speaking generally, to alleged statements by Calder bearing on Thurston's right to assign the patent, and are adequately dealt with in the opinion of the District Court.

Undoubtedly, the aged and infirm inventor was no fair match in trading for an experienced and able negotiator in the prime of life. But superior strength and ability do not imply dishonesty, and the bill is founded on fraud. It does not allege either that Thurston was mentally incapable, or that he was coerced or unduly influenced by Calder; the evidence would not sustain such allegations if made. This aspect of the case received careful and considerate attention from the trial

Digitized by Google

judge. If Thurston had been Calder's equal in health and ability, the claim that he had been defrauded would, upon the evidence before us, be so obviously unfounded as to require little discussion. Upon this phase of the case, and also upon the question of gross inadequacy of price, we agree with the opinion of the District Court.

The decree dismissing the bill is affirmed, with costs to the appellees.

Digitized by Google

(249 Fed. 177)

SEEGMILLER v. DAY.

(Circuit Court of Appeals, Seventh Circuit. January 2, 1918.)

No. 2478.

1. BANKRUPTCY ⟹293(1)—COURTS OF BANKRUPTCY—JURISDICTION OF PLENARY SUITS BY TRUSTEE.

A suit by the trustee of a bankrupt corporation to recover unearned dividends illegally paid to defendant as a stockholder from the capital of the corporation when insolvent, some within four months prior to the bankruptcy and some previous to that time, is within the jurisdiction of a court of bankruptcy, under Bankruptcy Act July 1, 1898, c. 541, §§ 60b, 70e, 30 Stat. 562, 565, as amended, respectively, by Act June 25, 1910, c. 412, § 11, 36 Stat. 842, and Act Feb. 5, 1903, c. 487, § 16, 32 Stat. 800 (Comp. St. 1916, §§ 9644, 9654).

2. BANKRUPTCY ⟹293(4)—SUITS BY TRUSTEE—JURISDICTION—"CONSENT."

The filing of an answer to the merits by the defendant in a plenary action by a trustee brought in a District Court, without objection to the jurisdiction of the court, *held* to amount to a consent to such jurisdiction within Bankruptcy Act, § 23b (Comp. St. 1916, § 9607).

[Ed. Note.—For other definitions, see Words and Phrases, First and Second Series, Consent.]

3. BANKRUPTCY ⟹145(1)—CORPORATIONS—STATUTORY LIABILITY OF DIRECTORS—ENFORCEMENT BY TRUSTEE.

Under Hurd's Rev. St. Ill. 1915-16, c. 32, § 19, which provides that directors of a corporation, who declare and pay any dividend when the corporation is insolvent, "shall be jointly and severally liable for all debts of such corporation then existing, and for all that shall thereafter be contracted while they shall respectively continue in office," the liability so created is personal to the creditors, one which cannot be invoked by the corporation, does not become an asset of its estate in bankruptcy, and is not enforceable by its trustee.

Appeal from the District Court of the United States for the Eastern Division of the Northern District of Illinois.

Suit in equity by Edwin C. Day, trustee in bankruptcy of the Chicago Folding Box Company, against Charles H. Seegmiller. Decree for complainant, and defendant appeals. Affirmed in part, and reversed in part.

The trustee of the bankrupt corporation filed a plenary bill in equity against appellant and another, alleging they were directors of the corporation, that while the corporation was insolvent these directors declared and paid dividends in reduction of the capital stock of the corporation, a large amount of which dividends are alleged to have been paid to themselves as dividends upon their own stock; appellant being charged with having so secured $8,232.84 of such dividends prior to four months before the bankruptcy, and $1,156 within such four months. They were also charged with being the holders of certain corporate stock for which they had not paid. The relief in the bill demanded of appellant is "that said pretended dividends be decreed to have been declared in fraud upon the creditors and upon your orator herein, and that the said C. H. Seegmiller be ordered to repay to your orator the $1,156 taken within four months of bankruptcy, and the $8,232.84 taken within one year and a half prior to bankruptcy, and $6,300 as unpaid subscription to the capital stock," and such other relief as the nature of the case may require and the court deem proper. Detailed answer was filed, wherein it was denied that dividends were paid while the company was insolvent, and as to the alleged unpaid stock subscription it was stated that it was paid through a divi-

Digitized by Google

dend declared and paid on other of appellant's stock, and that if the subscription was not properly so paid appellant is prepared to surrender the stock.

The cause was heard and decree was entered, in which it was found that the evidence sustained the allegations of the bill; that appellant was a stockholder and director, and that while the corporation was insolvent he declared and paid dividends, himself receiving by way of such dividends the sum of $9,046.51; that he was a subscriber to 63 shares, of $100 par value, of the capital stock, for which he had paid nothing; and that by reason of the declaration and payment of dividends in reduction of capital stock appellant became liable under section 19, chapter 32, of the Revised Statutes of Illinois, for all of the debts of the corporation then existing or thereafter created while he remained in office as director, and found the total amount of such debts to be $79,853.72. And the court decreed that the trustee recover from appellant the sum of $9,046.51 as dividends thus improperly received by him, and the further sum of $6,300 for his unpaid stock subscription, and the further sum of $64,507.21 to pay the balance of the debts of the corporation for which he became liable as aforesaid under section 19, chapter 32, of the Revised Statutes of Illinois for his having while a director assented to the declaration of and paid dividends, while the corporation was insolvent. There was a further finding that the trustee recover from the defendants jointly and severally $79,853.72 as the total amount of such debts, which includes the amounts severally found due from each of the defendants and decreed to be paid by them.

William Slack, of Chicago, Ill., for appellant. Adams, Follansbee, Hawley & Shorey, of Chicago, Ill. (Mitchell D. Follansbee and Robert W. Schupp, both of Chicago, Ill., of counsel), for appellee.

Before BAKER, ALSCHULER, and EVANS, Circuit Judges.

ALSCHULER, Circuit Judge (after stating the facts as above). [1] No other ground for federal jurisdiction appears than such as arises under the Bankruptcy Act, and it is maintained for appellant that the District Court did not have jurisdiction of the action. Section 23b of the Bankruptcy Act, as amended by Act June 25, 1910, c. 412, § 7, provides:

"Suits by the trustee shall only be brought or prosecuted in the courts where the bankrupt, whose estate is being administered by such trustee, might have brought or prosecuted them if proceedings in bankruptcy had not been instituted, unless by consent of the proposed defendant, except suits for the recovery of property under section sixty, subdivision b; section sixty-seven, subdivision e; and section seventy, subdivision e."

So much of the recovery in the decree as represents what was wrongfully paid to appellant within four months of the bankruptcy was recoverable by the trustee under section 60b, and such of it as represents what he so received prior to the four months' period was recoverable under section 70e, both of which sections are excepted from the operation of the quoted section. Both section 60b and section 70e provide that in actions brought thereunder the bankruptcy court shall have concurrent jurisdiction with state court.

[2] But as to these items of the recovery, as well as that of the unpaid stock subscription, we are of opinion that, under the circumstances here appearing, that part of section 23b providing for jurisdiction of the bankrupt court through the consent of the proposed defendant is here effective to confer jurisdiction on the federal court. As to these items the bill fully informed appellant, and he filed full and specific answer to these charges, without suggestion of objection on his part to the jurisdiction of the bankruptcy court to hear and de-

Digitized by Google

termine those issues. The record disclosing no objection to the jurisdiction, but, on the contrary, showing active participation by appellant through full answer upon the merits, appellant's consent to the jurisdiction of the District Court, so far as his consent may have been necessary, thus sufficiently appears.

[3] Respecting that part of the decree against appellant which is predicated upon his alleged liability for the corporation's debts through declaring and paying dividends while the corporation was insolvent, a different question is presented. If, notwithstanding appellant's very plausible contention that recovery for corporate debts under the provisions of section 19, chapter 32, is wholly without and beyond the scope and purpose of the action, it be assumed that the bill is sufficient in this respect to sustain that part of the decree predicated thereon; and if it be further assumed, contrary to appellant's earnest insistence, that as to this subject-matter the jurisdiction of the bankruptcy court may be and was conferred by consent of appellant as provided in section 23b, yet is this liability in any event one to which the trustee succeeded, and enforceable by him? It arises solely under the Illinois statute, which is:

"If the directors or other officers or agents of any stock corporation shall declare and pay any dividend when such corporation is insolvent, or any dividend the payment of which would render it insolvent, or which would diminish the amount of its capital stock, all directors, officers or agents assenting thereto shall be jointly and severally liable for all the debts of such corporation then existing, and for all that shall thereafter be contracted, while they shall respectively continue in office."

Many of the states have statutes more or less similar, but it seems most of them have provisions limiting the gross liability for such transgression of the directors to the amount of dividends so declared and paid. In some the statute gives the right of action to the corporation and to its creditors. In others, as in Illinois, it is not stated to whom the right of action is given, except as this must be inferred from the provision itself. The adjudications on such statutes are singularly few, and on the Illinois statute we find practically none. Thompson, Corporations (2d Ed.) § 1372, says:

"Under these statutes almost without exception the liability imposed is to the creditor. * * * Under all such statutes it is a self-evident proposition that the party in whose favor the liability is imposed has the right of action to enforce it. * * * Whether a receiver can maintain an action, must depend in the main on the terms of the particular statute. If the statute makes the penalty a debt due to the corporation for a breach of duty on the part of the directors toward the corporation, then it is clear that the receiver who succeeds to the right of the corporation can maintain the action. The real test as to this right to sue, would probably depend on the question whether the penalty is made by the statute a part of the corporate assets, which it is the duty of the receiver to collect and distribute ratably among all the creditors, or whether the penalty is made a debt due from the directors jointly or severally to any creditor of the corporation."

And in section 1369:

"Where the directors are made jointly and severally liable such liability is not an asset of the corporation to be collected and marshaled between the creditors."

Digitized by Google

In 1 Loveland, Bankruptcy, it is stated (section 393):

"The right to enforce a statutory liability against an officer, director, or stockholder of a bankrupt corporation does not pass to its trustee in bankruptcy. The trustee is not entitled to maintain a suit to enforce such liability in a state or federal court. The reason for this is that such liability is not a part of the estate of the corporation. By virtue of statutes of this character the officers, directors, or stockholders, or some of them, become, as it were, sureties for the debts of the corporation to the extent provided by the statute. It is in the nature of a security to which a creditor may resort if the corporation does not pay its debts. The corporation could not enforce this liability."

Remington, Bankruptcy (2d Ed.) § 478, says:

"A statutory secondary liability of directors and stockholders is not an asset of the corporation; and such liability is not enforceable by the trustee in bankruptcy."

The words of the statute "jointly and severally liable for all of the debts of such corporation" clearly imply a liability to the creditors to whom such debts are owing. Similar words in the Vermont statute were so construed in Hilliard v. Lyman et al. (C. C.) 138 Fed. 469, where the court said:

"The liability for a debt must be a liability to the creditor, and the avails of the liability would not be assets of the corporation."

And its following further language is even more applicable to the Illinois statute than that of Vermont:

"There is no limit to liability upwards, but it extends as far as the assent goes, and no creditor would have any right to or interest in any recovery by another, as there would or might be if there was a limit to the amount that could be recovered by all. Each creditor must recover only upon the assent of each director to the indebtedness to him in excess, and what is so recovered belongs to that creditor only, and there could be no marshaling between these more than between any creditors of a common debtor."

In the earlier case of In re Crystal Spring Bottling Co. (D. C.) 96 Fed. 945, that same court, referring to the statutory liability of directors for corporate debts, said:

"The creditor is not obliged to exhaust that remedy; nor has the corporation, or the trustee of it in bankruptcy, any right to pursue it. It is not an asset of the corporation, but security for the creditors, who may follow it or not, at their pleasure, with all other securities, till they are paid in full."

In Re Beachy & Co. (D. C.) 170 Fed. 825, the court, commenting on the Illinois statute making directors liable for consenting to indebtedness beyond the capital stock, said:

"It seems clear, therefore, that this statutory cause of action belongs exclusively to the creditors. It is a secondary security which is not an asset of the estate and does not pass to the trustee. Such a claim may be enforced by the creditor in any court having jurisdiction, quite independently of the bankruptcy proceedings."

Where the conditions prescribed by the Illinois statute are present unlimited liability is created in favor of the creditor and against the director. There is not as under some other statutes a fund provided for wherein all the creditors may ratably participate, and in which all therefore have an interest. Each creditor may of his own volition

Digitized by Google

assert or refrain from asserting the liability, and against the creditor asserting it the director may make defense peculiar to such creditor, and perhaps to none others—possibly waiver, perhaps estoppel, maybe set-off. We are of opinion that the liability created under this statute is personal to the creditors, one which could not be invoked by the corporation, did not become an asset of the bankrupt estate, and is not enforceable by the trustee.

Without prejudice to the right of any creditor to pursue his remedy under section 19, the decree, in so far as it finds and imposes liability thereunder for the debts of the corporation, is reversed, and in the other respects, viz. as to the liability for dividends declared and paid to the defendants in the action, and liability for unpaid stock subscriptions, it is affirmed. Appellant is awarded costs of the appeal.

(249 Fed. 181)

KNOTTS v. CLARK CONST. CO.

(Circuit Court of Appeals, Seventh Circuit. November 9, 1917. On Petition for Rehearing, January 2, 1918.)

No. 2358.

1. CONTRACTS ⟹313(2)—BUILDING CONTRACT—ACTION FOR BREACH—RENUNCIATION BY OWNER.

The refusal of the owner to pay a building contractor on the monthly estimate of the architect as required by the contract, and his subsequent action in preventing the architect from giving further certificates, amounted to a renunciation of the contract, which justified its abandonment by the contractor and entitled him to recover damages for its breach.

2. DAMAGES ⟹124(3)—MEASURE—BREACH OF BUILDING CONTRACT BY OWNER.

Where a building contractor was prevented from completing performance of the contract by the refusal of the owner to make agreed monthly payments as the work progressed, and the contract was single, specifying no fixed amounts for specific materials or labor, but only the price for the entire job, the minimum measure of damages for its breach is the outlay reasonably incurred by the contractor in the course of its due performance, and this is recoverable, without regard to whether or not there would have been a profit on full performance.

In Error to the District Court of the United States for the Eastern Division of the Northern District of Illinois.

Action at law by the Clark Construction Company against Armanis F. Knotts. Judgment for plaintiff and defendant brings error. Affirmed.

W. J. Whinery, of Hammond, Ind., for plaintiff in error.

Sidney Stein, of Chicago, Ill., for defendant in error.

Before KOHLSAAT, MACK, and ALSCHULER, Circuit Judges.

MACK, Circuit Judge. While several counts were filed in this action, counsel agree that, the common counts and another count on the contract having been expressly abandoned, the trial proceeded on the amended first additional count. In this count plaintiff alleged the execution of a written contract to furnish the material and labor

---

⟹For other cases see same topic & KEY-NUMBER in all Key-Numbered Digests & Indexes

Digitized by Google

for the construction of certain store and office buildings in Gary, Ind., to be completed by April 15, 1907, in accordance with plans and specifications made a part of the contract, for the consideration of $56,500, payable in monthly installments as the work progressed, with a right on the part of the defendant to retain 15 per cent. to secure the performance; payments to be made on the architect's certificate. It further averred waiver of the time requirement for completion; the issuance of an architect's certificate for $2,500 in April; the refusal of payment thereof; the demand for additional certificates in May, June, and July; defendant's direction to the architect to refuse them and his consequent refusal; the performance of work and delivery of material both before and after the delivery of the architect's certificate for $2,500; defendant's refusal to pay either the one certificate or any sum for the work performed and material furnished pursuant to the contract and amounting to over $13,000; plaintiff's abandonment of the work because of defendant's refusal to pay and the arbitrary and fraudulent act of the architect in the refusal of certificates; the sale by plaintiff of material on hand for $1,200, with a loss of $5,000; and defendant's further failure to pay any part of the moneys to plaintiff's damage in the sum of $25,000. The conflicting evidence was resolved by the jury in favor of the plaintiff. It found against the defendant on his claim of set-off, and returned a verdict of $10,000 in favor of the plaintiff. To reverse the judgment rendered thereon, defendant sued out a writ of error.

[1] 1. The cause of action as alleged in this count is for recovery of the sums expended under and pursuant to the contract as the damages alleged to have been sustained by reason of defendant's breach. This breach is alleged to have consisted in the refusal to pay the architect's certificate, and in the further refusal to pay for the work monthly as it progressed; the securing of an architect's certificate, condition precedent to the obligation so to pay, having, under the allegations, been waived by reason of the fraudulent and arbitrary action of the architect in refusing to give the certificate because of defendant's alleged direction to him so to act.

While the count does not state that the moneys so expended were the reasonable outlays of the plaintiff in the performance of the contract, the omission of this allegation could not be taken advantage of on motion in arrest of judgment or on writ of error. Any defect in this respect was cured by the verdict. The declaration furthermore states sufficient grounds for plaintiff's abandonment of the contract. Persistent refusal to pay installments due under a building contract, under the circumstances alleged in this declaration, amount to a renunciation on the part of the owner and justified abandonment of further performance; for obstruction to performance need not be physical. Actions such as those alleged are just as effective in absolving the other party from any further readiness or offer to perform as a condition to the enforcement of the liability to answer for the damages sustained by reason of the breach. Phillips & Colby Construction Co. v. Seymour, 91 U. S. 646, 23 L. Ed. 341; Dobbins v. Higgins, 78 Ill. 440; Keeler v. Clifford, 165 Ill. 544, 46 N. E. 248; National Tool Co. v. Standard Shoe Machinery Co., 181 Mass. 275, 63 N. E. 900.

Digitized by Google

For reasons more fully stated in considering the measure of damages, the declaration in our judgment states a good cause of action.

[2] 2. The vital question in this case is that of the measure of damages. Defendant contends, as stated by counsel in his supplementary brief:

"The claim in the case at bar is limited to compensation for the work actually done in an effort to carry out the contract. This work can only be measured by the contract price, and any other value regarding it is wholly immaterial. The contract provides no special price covering the alleged work and material furnished under the contract in the case at bar. Therefore its value could only be determined from evidence showing what work and material had been furnished, and what it would cost to complete the building; in other words, evidence from which the value of the labor and material done and furnished could be determined, as based upon the contract price."

The parties are agreed that the contract is single. While payments were to be made monthly as the work progressed, the contract itself furnished no basis for the separate items entering into the work. We need not, therefore, consider what the true measure of damages would be after such a breach, if the contract were divisible, or if a schedule of prices to be paid for each article forming part of the subject-matter were specified in the contract itself. But defendant's deduction, that in a contract such as this plaintiff can recover only the profit, if any, that he has been prevented from earning by reason of the breach, is contrary both to principle and to authority.

A substantial breach during the progress of the work justifying the abandonment by the other party gives rise either to an action for the damages sustained through the breach or to a quantum meruit. If the latter form be pursued, the measure of damages is the fair value of the work and labor performed and the materials furnished, with a conflict in the authorities as to whether or not schedule prices when specified in the contract should limit the recovery. But if a plaintiff not in default—and one who is justified in abandoning further work is not thereby in default—sues for the breach of the contract, he may, at his option, specify and claim as his damages either the profit which he has thus been prevented from earning or his actual outlays reasonably made in the performance of the contract plus the profits, if any, which he would have made if he had not been prevented from continuing to perform the contract.

It may well be that ordinarily there is no, or no substantial, difference in the result, because, ordinarily, an owner does not prevent further performance of a contract the carrying out of which would be unprofitable to the contractor. It may, however, happen, as defendant in the instant case claims, that such prevention is to the contractor's benefit, that if he had been permitted to carry out his contract his loss on the whole job would have equaled or exceeded the outlays made up to the time of the owner's breach, so that, if the sole specification of damages were the loss of profits, and the proof established no such loss, but, on the contrary, a gain, the plaintiff would get only nominal damages.

If, however, plaintiff specifies as his damages the outlays actually and reasonably incurred either with or, as in the instant case, without

Digitized by Google

a further claim for loss of prospective profits, he will not be deprived of reimbursement for these reasonable outlays because he does not prove the profit, or because defendant could establish that, if he had been permitted to finish the work, the net result would have been a loss equal to or greater than the outlays. This principle is clearly enunciated in United States v. Behan, 110 U. S. 338, 4 Sup. Ct. 81, 28 L. Ed. 168, and the same result is reached in Lodder v. Slowey, 1904, A. C. 442, affirming 20 New Zealand L. R. 321, and Philadelphia v. Tripple, 230 Pa. 480, 79 Atl. 703. See Doolittle v. McCullough, 12 Ohio St. 360. See, however, Wellston Coal Co. v. Franklin Paper Co., 57 Ohio St. 182, 48 N. E. 888, and Kehoe v. Mayor of Rutherford, 56 N. J. Law, 23, 27 Atl. 912.

3. While the evidence was conflicting, clearly there was sufficient to sustain the averments of the declaration. We deem it unnecessary to consider in detail the numerous assignments of error. While some evidence may have been improperly admitted, the error resulting therefrom was, in our judgment, entirely harmless. The testimony of the statements of the architect as to the statements made to him by the owner, while not admissible as evidence that the owner made the statements, were nevertheless admissible as statements of the reason that governed the architect's wrongful action.

Judgment affirmed.

On Petition for Rehearing.

PER CURIAM. In the petition for rehearing, it is again strongly urged that at best only the proportionate value of work done, in its relation to the entire work and on the basis of the entire contract price, can be recovered. To give the contractor his outlays reasonably incurred, might, it is urged, enable him in some cases to recover more than the entire contract price for an incomplete job.

As to whether or not the contract price is the maximum that in any event could be recovered, we express no opinion, because the facts in the case before us require none; and for the same reason, we express no opinion as to the proper measure of damages if a contract specifies fixed amounts for specific materials or labor, or provides for definite payments at successive times or stages of the work, deemed by the parties, either expressly or impliedly, as full compensation for so much as shall then have been completed, nor where, as is not here the case, the work has so far progressed that it is practicable to determine with reasonable definiteness what proportion of the entire work contracted for remains undone. Here the price of $56,500 was for the entire job; payments were to be made as the work progressed, but the contract fixes no basis for the amounts to be paid. After the foundation had been laid and considerable material delivered, defendant wrongfully stopped further work. We held that under these circumstances, the minimum measure of damages, whatever the form of action, is the outlay reasonably incurred in the course of due performance of the obligation.

The petition for rehearing is denied.

Digitized by Google

(249 Fed. 185)

HORTON v. MENDELSOHN et al.

(Circuit Court of Appeals, Third Circuit. April 3, 1918.)

No. 2315.

BANKRUPTCY ⇐440—APPEAL—JURISDICTION OF COURT OF APPEALS.

Neither under Bankruptcy Act July 1, 1898, c. 541, § 24a, 30 Stat. 553 (Comp. St. 1916, § 9608), nor section 25a (Comp. St. 1916, § 9609), has the Circuit Court of Appeals jurisdiction to review on appeal an order of the bankruptcy court concerning the commitment of a bankrupt for contempt for not complying with an order to turn over to his trustee property belonging to the bankrupt estate, but that question is reviewable only by petition to revise under section 24b.

Appeal from the District Court of the United States for the Middle District of Pennsylvania; Chas. B. Witmer, Judge.

In the matter of the Bankruptcy of Moses Mendelsohn and Samuel Mendelsohn, as individuals and copartners trading as Mendelsohn Bros. A rule issued, on petition of Charles H. Horton, trustee, requiring the bankrupts to show cause why they should not be attached for contempt for failure to comply with an order directing them to turn over to their trustee funds found to have been concealed, was discharged, and the trustee appeals. Dismissed.

Lee P. Stark and George D. Taylor, both of Scranton, Pa., for appellant.

R. L. Levy and H. W. Mumford, both of Scranton, Pa., and E. H. Delaney, for appellees.

Before BUFFINGTON, McPHERSON, and WOOLLEY, Circuit Judges.

WOOLLEY, Circuit Judge. On petition charging the bankrupts with concealing from the trustee property belonging to the bankrupt estate, the referee, after hearing, found that the bankrupts had retained and concealed $2,168.21, and, accordingly, entered an order directing them to turn over that sum to the trustee. Upon their failure to comply with the order, the trustee obtained a rule on the bankrupts to show cause why they should not be attached for contempt. The court, after hearing, discharged the rule. The trustee appealed.

The questions raised on appeal are in the main questions of fact as distinguished from matters of law. They arise from the fact that the bankrupts filed in the contempt proceeding the same answer in substance that they had filed in the turnover proceeding, and supported it in part by the same testimony. This was, that they had no money to conceal in the first instance, and, therefore, in the second instance, they had no money to turn over. The trustee maintains that while this defence was appropriate to the turnover proceeding, it was there adjudged against the bankrupts and finally disposed of, and, therefore, it could not be employed as a defence in a contempt proceeding where the issue only concerned the bankrupts' present ability to pay the money which the court had previously decided the bank-

⇐For other cases see same topic & KEY-NUMBER in all Key-Numbered Digests & Indexes

Digitized by Google

rupts had. Stated differently, the trustee maintains, that on authority of In re Epstein (D. C.) 206 Fed. 568, and 210 Fed. 236, 127 C. C. A. 54, the turnover order was a final adjudication that the bankrupts had money and had concealed it, and that that adjudication concluded the court as well as the bankrupts as to that fact. But the trustee complains, that the court did not so regard the turnover order, but, in effect, set it aside by considering again the defence there made and by accepting the evidence there produced as evidence of the bankrupts' present inability to comply with the turnover order.

The single question whether in the contempt proceeding the trial judge disregarded the legal force of the final order in the turnover proceeding by opening the question of the bankrupts' possession and concealment of property and applying the evidence on that issue to the issue in the contempt proceeding affecting the bankrupts' present ability to turn over the money ordered—contrary to the rule In re Epstein—is a matter of law which the trustee might properly have raised by petition to review and revise (although it is perfectly clear from expressions in his order, quoted literally from the opinion of In re Epstein, that the trial judge had that decision before him, and, in an attempt to follow it, treated "as settled beyond further controversy" the fact that the bankrupts did have money and did conceal it, and that all he intended to decide in the contempt proceeding was the question whether the bankrupts were "merely defying the order" or were "really unable to obey" it). But the case is not before this court on petition to review and revise the court's order in a matter of law. It is here on appeal, charging error to the court, not only in disregarding the legal force of the turnover order, but in deciding matters of fact, which involve evidential inferences, competency of witnesses to give certain testimony, and generally the sufficiency of the evidence to sustain the court's order discharging the rule. Our first, and indeed, our final, inquiry in this case is whether this court has jurisdiction on appeal to review this contempt proceeding.

The appellate jurisdiction of Circuit Courts of Appeals over controversies arising in bankruptcy proceedings is conferred, of course, by the Bankruptcy Act. Judicial Code (Act March 3, 1911, c. 231) § 130, 36 Stat. 1134 (Comp. St. 1916, § 1122). We find nothing in the Act which confers appellate jurisdiction upon this court over a controversy of this kind. Such jurisdiction certainly is not conferred by section 25a; nor is it conferred by section 24a, where, as here, the question determined by the order of the bankruptcy court is between the bankrupt and his creditors and is of an administrative character. In re Mueller, 135 Fed. 711, 68 C. C. A. 349, cited and approved In the Matter of the Petition of Loving, Trustee, 224 U. S. 183, 32 Sup. Ct. 446, 56 L. Ed. 725. All Circuit Courts of Appeals in which the question has arisen have held, so far as we are informed, that an order of a court of bankruptcy concerning the commitment of a bankrupt for contempt for not complying with an order to turn over to his trustee property belonging to the bankrupt estate is reviewable only by petition to revise under section 24b. The cases are cited and considered in Kirsner v. Taliaferro, 202 Fed. 51, 54, 55, 126 C. C. A. 305.

Digitized by Google

We are of opinion that a question of the propriety of an order of the court of bankruptcy, committing or refusing to commit a bankrupt for contempt in failing to obey an order to turn over property to the trustee, is not within the appellate jurisdiction of this court, and, therefore, we direct that the appeal be dismissed.

(249 Fed. 187)

In re WALLER.

NATIONAL CITY BANK OF CHICAGO v. WALLER.

(Circuit Court of Appeals, Seventh Circuit. January 2, 1918.)

No. 2499.

BANKRUPTCY ⇐410—DISCHARGE—ENLARGEMENT OF TIME FOR FILING APPLICATION.

Under Bankruptcy Act July 1, 1898, c. 541, § 14a, 30 Stat. 550 (Comp. St. 1916, § 9598), which authorizes the judge to enlarge the time for filing an application for discharge, when it is made to appear that the bankrupt was unavoidably prevented from filing it within the year prescribed, a motion for such enlargement is addressed to the reasonable discretion of the court, and it is sufficient to sustain an order granting the same that bankrupt relied on his attorney, who promised to file the application within the year, but that he became ill three months before the expiration of the year, and at that time was in a sanitarium, and that bankrupt did not know that application had not been filed.

Petition for Revision of Proceedings of the District Court of the United States for the Northern District of Illinois; George A. Carpenter, Judge.

In the matter of Edward C. Waller, Jr., bankrupt. On petition of the National City Bank of Chicago to review an order permitting bankrupt to file application for discharge after the expiration of a year from the adjudication. Petition denied.

Adjudication in bankruptcy was had in this cause on April 5, 1916. No application for discharge was filed within the period of 12 months subsequent to adjudication. On April 20, 1917, 12 days after the expiration of the 12 months' period, the District Court entered an order allowing the bankrupt to file instanter his petition for discharge, which he did. Afterwards, and on May 19, 1917, the bankrupt filed, nunc pro tunc as of April 20, 1917, his further verified petition for leave to file his petition for discharge, setting out the grounds. From that petition it appears that bankrupt instructed his attorney to procure his discharge as soon as it could be done, and relied wholly upon the attorney to secure it; that from time to time he consulted his attorney on the matter, and was assured by him that he would attend tc the matter; that for the 3 months next preceding the last day for filing his application for discharge his said attorney was sick, and for about a month of that time in a sanitarium at Battle Creek, Mich.; that owing to the situation, and to the bankrupt's reliance upon his attorney's promises aforesaid, together with the attorney's said illness, the bankrupt was unavoidably prevented from filing his petition for discharge within the statutory period. The petition thereupon prays for an extension of time to file the same. No new order was entered after the filing of the nunc pro tunc petition. The order extending the time and granting leave to file his application was entered without notice to any one.

⇐For other cases see same topic & KEY-NUMBER in all Key-Numbered Digests & Indexes

Digitized by Google

From the petition to review and revise it appears that at the time adjudication was had there was pending in the superior court of Cook county, Ill., a suit brought by the petitioner herein against said bankrupt, in which the summons had been duly served, which was suspended by the filing of his voluntary petition in bankruptcy; that after the lapse of the 12 months succeeding his adjudication as a bankrupt, and on April 16, 1917, plaintiff in that case, petitioner herein, proceeded to judgment in said cause by default, for the sum of $5,555.15. Thereafter, when the bankrupt sought to ascertain why judgment was entered notwithstanding the bankruptcy proceedings, he was advised by petitioner's attorney that his (Waller's) time in which to file his application for discharge had expired. On April 20, 1917, the bankrupt advised the attorney for the petitioner of the order obtained that day for an extension of time to file his application. The petition herein to review sets out, further, that on April 30, 1917, the petitioner presented to the District Court its motion to vacate the order entered on April 20, 1917, extending the time to apply for discharge and granting other relief, together with an affidavit in support thereof, which motion was duly postponed to May 12, 1917, and on that date denied; that the notices, petitions, motions, and orders are all the motions, petitions, notices, steps, papers, and orders filed in said cause having any bearing on or pertaining to said petition for discharge. This affidavit purports to enumerate what evidence was before the court on the hearing of the motion to vacate.

The petition herein is brought to review and revise the order of May 12, 1917, overruling and denying said motion to vacate.

G. L. Wire, of Chicago, Ill., for petitioner.

John A. Bloomingston, of Chicago, Ill., for respondent.

Before KOHLSAAT, ALSCHULER, and EVANS, Circuit Judges.

KOHLSAAT, Circuit Judge (after stating the facts as above). We are unable to find from the petition herein that all the matters which were before the District Court have been here produced. Moreover, we are of the opinion that the order of the District Court should stand for other reasons. Section 14a of the Bankruptcy Act here involved reads as follows:

"Any person may, after the expiration of one month and within the next twelve months subsequent to being adjudged a bankrupt, file an application for a discharge in the court of bankruptcy in which the proceedings are pending; if it shall be made to appear to the judge that the bankrupt was unavoidably prevented from filing it within such time, it may be filed within but not after the expiration of the next six months."

The motion to enlarge the time to file the application for discharge at any time before the expiration of the 18 months' period is one addressed to the reasonable discretion of the court. In re Fritz (D. C.) 173 Fed. 560; In re Chase (D. C.) 186 Fed. 408; In re Churchill (D. C.) 197 Fed. 111; In re Swain (D. C.) 243 Fed. 781.

In the present case we are unable to say that the District Judge abused that discretion or exceeded his powers. The Bankruptcy Act was passed, among other things, to ameliorate the condition of certain debtors and for a benevolent purpose, and should not be harshly construed. In the case at bar it was not obligatory upon the bankrupt or his attorney to have made application for a discharge at some time prior to the last three months of the year succeeding the adjudication in order to escape the charge of negligence. He is chargeable

Digitized by Google

with only reasonable diligence in that respect, and might well assume that the application for discharge could be safely left till towards the end of the 12 months' period, and may claim the benefit of such unavoidable causes as excuse the failure to apply for discharge within the 12 months arising at any time prior to the expiration of the 12 months' period succeeding adjudication. The rule is well stated by Judge Geiger in In re Churchill, supra.

The motion to review and revise is denied.

(249 Fed. 189)

GEALEY v. SOUTH SIDE TRUST CO.

In re NATIONAL HOG CO.

(Circuit Court of Appeals, Third Circuit. February 1, 1918.)

No. 2328.

1. BANKRUPTCY ⟹144—DEFECTIVE PROCEEDINGS—APPOINTMENT OF RECEIVER—EFFECT.

Where a receiver is appointed by a state court, and a petition in bankruptcy is subsequently filed, the proceedings in bankruptcy supersede those in the state court, yet as the receiver appointed by the state court is an officer of court, and the property in his hands is in custodia legis, he has no power to make surrender, but such surrender must be directed by the state court, and both it and the court of bankruptcy should be governed by the principles of comity.

2. BANKRUPTCY ⟹117(1)—PROCEEDINGS—SALES.

Where, as there were no funds to feed a herd of hogs belonging to the bankrupt and to conserve them, they were disposed of by the receiver, persons asserting claims to the hogs may be allowed to assert them against the moneys so realized.

On Petition to Revise an Order of the District Court of the United States for the Western District of Pennsylvania; Charles P. Orr, Judge.

In the matter of the bankruptcy of the National Hog Company. Petition by T. M. Gealey, a receiver appointed by the state court to revise orders in favor of the South Side Trust Company, receiver in bankruptcy. Petition to revise dismissed.

Robert B. Ivory, of Pittsburgh, Pa., for petitioner.

Charles A. Woods and L. M. Alpern, both of Pittsburgh, Pa., for respondent.

Before BUFFINGTON, McPHERSON, and WOOLLEY, Circuit Judges.

BUFFINGTON, Circuit Judge. Stripped of all incidentals, this petition to revise finally narrows, first, to the question of the right of the District Court to appoint a receiver for the corporation against which a petition in bankruptcy was filed; and, secondly, whether such receiver was warranted in taking possession of a herd of hogs belonging to said company, which prior to the filing of said bankruptcy had

⟹For other cases see same topic & KEY-NUMBER in all Key-Numbered Digests & Indexes

Digitized by Google

been seized by a receiver for said corporation, appointed by a state court.

[1] Without here reciting the several acts of the receivers of both courts and the differences between them which might have resulted in creating an unseemly conflict between the courts, whose officers they were, it suffices to say the state court, when the matter was called to its attention, properly announced the principle of jurisdictional control in such cases by quoting, with slight changes to fit the present case, the language of Chief Justice Fuller of the Supreme Court, in Re Watts, 190 U. S. 1, 23 Sup. Ct. 718, 47 L. Ed. 933, as follows:

"The proceedings in bankruptcy superseded further proceedings in the state court, but the receiver had no power to make a surrender. He was the representative of the state court. The property in his hands was in custodia legis and he had only such authority as was given him by the state court. It remained for the state court to transfer the assets, settle the account of its receiver, and close its connection with the matter. He also said: 'Necessarily, when like proceedings in the state courts are determined by the commencement of proceedings in bankruptcy, care has to be taken to avoid collision in respect of property in possession of the state courts. Such cases are not cases * * * of pre-existing liens or in aid of the bankruptcy proceedings. The general rule as between courts of concurrent jurisdiction is that property already in possession of the receiver of one court cannot rightfully be taken from him, without the court's consent, by the receiver of another court appointed in a subsequent suit; but that rule can have only a qualified application, where winding up proceedings are superseded by those in bankruptcy, as to which the jurisdiction is not concurrent. Still it obtains as a rule of comity. * * *"

The decision of the Supreme Court of the United States above referred to, of course, establishes the paramount jurisdiction of the District Court in bankruptcy in the present case; so its orders in the premises must stand. It also justifies the continued possession by that court of the hogs which the receiver obtained, and as they have since, by its order, been sold, it would be of no present avail to discuss the steps by which, without resort to the state court, the receiver obtained possession—steps which led the state court to add to what is above quoted the statement:

"Had it been recognized that frantic haste on the part of counsel was not necessary to protect the property, this unseemly conflict could have been avoided."

We are urged to lay down some rule of procedure in such cases hereafter. In the nature of things, this cannot be done farther than to call attention, as Chief Justice Fuller did in the case cited, to the fact that, although the paramount jurisdiction and the right of possession is in the District Court, yet, the goods of the bankrupt being already in possession of another court, there still exists, in the necessary change of possession, the rule of comity between courts, the application of which must, in the final analysis, be left to the good sense and considerate conduct of those controlling such comity-related courts.

[2] It has further been contended that certain stockholders of the National Hog Company had rights or claims to some of the hogs in the herd, and that their rights have been denied them by the seizure and sale of the herd. It is proper for us to add that it is quite apparent

Digitized by Google

that there was a pressing necessity to very promptly sell this herd, as there were no funds with which to feed the hogs. But the substitution of the purchase money for the herd in no way changes the rights of litigants, and, if any stockholders of the company had any rights, claims, or property in any of the hogs, it is certainly in the power, and we doubt not will be the wish, of the court below, if it be shown such rights exist, by proper proceedings and order to afford such persons an opportunity to litigate and establish their several rights.

Finding no reversible error in the orders made by the court below, the petition to revise is dismissed.

(249 Fed. 191)

VOVES v. UNITED STATES.

(Circuit Court of Appeals, Seventh Circuit. March 5, 1918.)

No. 2536.

CRIMINAL LAW ⟹37—SALE OF LIQUOR TO INDIANS—OFFENSES—USE OF DECOY.

The selling of liquor to an Indian, in violation of Rev. St. § 2139 (Comp. St. 1916, § 4136a), and Act Jan. 30, 1897, c. 109, § 1, 29 Stat. 506 (Comp. St. 1916, § 4137), is an offense malum prohibitum, of which the intent or knowledge of the seller is not an element, and is immaterial; but the government cannot maintain an indictment for such offense, when by its own conduct, through its agents, it misled the defendant into believing that the act was lawful, as that the purchaser was not an Indian, but a Mexican.

In Error to the District Court of the United States for the Western District of Wisconsin.

Criminal prosecution by the United States against John M. Voves. Judgment of conviction, and defendant brings error. Reversed.

Arthur T. Holmes, of La Crosse, Wis., for plaintiff in error.

Arthur C. Wolfe, of La Crosse, Wis., for the United States.

Before BAKER, ALSCHULER, and EVANS, Circuit Judges.

BAKER, Circuit Judge. Voves was convicted of selling liquor to an Indian in violation of section 2139, R. S. U. S. (29 Stat. 506). This offense is malum prohibitum; a criminal or wicked intent is not an element; and as the statute does not contain the word "knowingly," or other of like import, the seller's belief that the purchaser was not an Indian is immaterial. That the seller voluntarily made the sale is sufficient. Feeley v. United States, 236 Fed. 906, 150 C. C. A. 165.

In the present case there was testimony which the jury might have accepted as establishing the following facts: Voves had not been selling or giving liquor to Indians; the government agents had no reason to suspect that he had been or would; Mexican railroad laborers had recently moved into the neighborhood; the Indian in question looked like a Mexican; he was a government decoy; he wore a black suit, white soft shirt, and black slouch hat; he came in and asked for

---

⟹For other cases see same topic & KEY-NUMBER in all Key-Numbered Digests & Indexes

Digitized by Google

liquor; Voves believed he was a Mexican; shortly he was followed by two white men, government detectives; as Voves was about to pass liquor to the decoy, one detective said to the other within the hearing of Voves, "I didn't know Indians were allowed to get whisky here;" whereupon Voves turned to them and said, "Why that man is a Mexican," and none of the three said a word in denial; they stood by while Voves made the sale on which the indictment was predicated. By exceptions to the charge the question is presented: Is the general rule, which is stated in the opening paragraph, of universal application?

Grant that the government may use a decoy to discover evidence of a committed crime of whatever nature; that, where one has the intent to commit a malum in se, or the willingness to do a malum prohibitum, a decoy may accompany the wrongdoer and even participate in the offense; that a liquor seller is guilty, despite his honest and reasonable belief respecting the age or race of the purchaser; and even that he must take his chance that a purchaser, who is not a government decoy, may willfully deceive him by camouflage—still the question remains: May the government maintain an indictment against a person for doing a malum prohibitum when the government's conduct has misled the person into believing that the prohibited act was a lawful act?

In a civil transaction between citizens such conduct as the jury might have found in this case would create an estoppel which would preclude a suit based upon the suppressed truth. Is our government of the superman type that releases the ruler from the obligations of honesty and fairness that are imposed upon the citizens? Is one's liberty or reputation as a law-abider to have less protection than his property? We are strongly of the view that sound public policy estops the government from asserting that an act which involves no criminal intent was voluntarily done when it originated in and was caused by the government agents' deception. United States v. Healy (D. C.) 202 Fed. 349. And on the subject of decoys generally, see Blaikie v. Linton, 18 Scottish L. R. 583; Woo Wai v. United States, 223 Fed. 412, 137 C. C. A. 604; Sam Yick v. United States, 240 Fed. 60, 153 C. C. A. 96; Grimm v. United States, 156 U. S. 604, 15 Sup. Ct. 470, 39 L. Ed. 550; Goode v. United States, 159 U. S. 663, 16 Sup. Ct. 136, 40 L. Ed. 297; Rosen v. United States, 161 U. S. 29, 16 Sup. Ct. 434, 480, 40 L. Ed. 606; Andrews v. United States, 162 U. S. 420, 16 Sup. Ct. 798, 40 L. Ed. 1023; Price v. United States, 165 U. S. 311, 17 Sup. Ct. 366, 41 L. Ed. 727; Scott v. United States, 172 U. S. 343, 19 Sup. Ct. 209, 43 L. Ed. 471; Goldman v. United States, 220 Fed. 57, 135 C. C. A. 625.

Judgment reversed, with direction to grant a new trial.

Digitized by Google

(249 Fed. 193)

FALLER v. BOISOT et al.

BOISOT v. FALLER et al.

(Circuit Court of Appeals, Fifth Circuit. January 24, 1918. Rehearing Denied March 11, 1918.)

No. 3161.

STREET RAILROADS ⇐55—FRANCHISE—OBLIGATION TO PAVE—ENFORCEMENT AGAINST MORTGAGEE.

Where a street railway company constructed its lines under a franchise ordinance, which required it, whenever a street upon which its road was operated should be paved, to put down similar pavement between and alongside its tracks, a mortgage subsequently given by the company on its property and franchise is subject to such obligation, and in a suit for its foreclosure, in which the court has taken possession of the property by a receiver, the city may intervene and obtain enforcement of the condition against the receiver. Such case is not one of assessment of benefits, but of enforcement of a contract right.

Appeals from the District Court of the United States for the Northern District of Texas; George W. Jack, Judge.

Suit in equity by Emile K. Boisot, trustee, against the Amarillo Street Railway Company, in which the City of Amarillo intervened. Complainant and Guy W. Faller, receiver of defendant, separately appeal from a decree in favor of intervener. Affirmed.

For opinion below, see 244 Fed. 838.

Thomas F. Turner and M. Cammack, both of Amarillo, Tex., for appellants.

W. H. Kimbrough, R. E. Underwood, and M. J. R. Jackson, all of Amarillo, Tex., for appellees.

Before WALKER and BATTS, Circuit Judges, and FOSTER, District Judge.

WALKER, Circuit Judge. Under a bill for the foreclosure of a deed of trust given by the Amarillo Street Railway Company to secure an issue of bonds a receiver of the property of that company was appointed. That property included a line of railway on streets of the city of Amarillo. The right of the street railway company to construct and operate a railway in the streets of the city was conferred by an ordinance, which was in force prior to and at the time of the execution of the deed of trust sought to be foreclosed. That ordinance provided that:

"Wherever such streets and highways may have gravel or macadam, or may hereafter be graveled or macadamized or paved with any other material, the surface between the rails of said track and on each side to the extent of 12 inches from the outside of the rails, or, if the ties extend further than 12 inches from the rails, then to end of ties, shall be supplied with gravel or macadam, or other paving material, of uniform quality and depth with the rest of the street adjacent to such track," by the grantees of the franchise, their successors and assigns.

⇐For other cases see same topic & KEY-NUMBER in all Key-Numbered Digests & Indexes

Digitized by Google

An intervening petition filed by the city of Amarillo, and evidence supporting averments of that petition, showed that performance of the obligation to pave the specified part of a street was, under the provision above quoted, due from the street railway company. By the decree of foreclosure the receiver was ordered to pay out of the proceeds of the sale of the property covered by the deed of trust the amount of the cost to the city of doing the paving which the quoted provision required the railway company to supply.

The deed of trust conveyed the properties and franchises of the street railway company, subject to the obligations imposed as conditions to the continuance of the privilege granted by the city to occupy and make use of parts of its streets. What the trustee acquired was burdened with the obligation to do what the franchise ordinance required. Resort to the court by the city for the enforcement of that obligation was made necessary by the fact that the properties of the railway company were in the custody of the court. The trustee was not entitled to have the properties and franchises covered by the deed of trust sold, and the proceeds applied to the payment of the bonds secured, without provision being made for compliance with the obligation imposed by the franchise ordinance. That was a contract right, which had priority over any right conferred by the deed of trust.

The right of the city to have the reasonable cost of the paving paid was not dependent upon the street railway company being benefited by the paving done, nor upon its solvency, nor upon the possibility of its properties being operated at a profit. Discussions of what may or may not be done in assessing the whole or a part of the cost of street improvements against the property claimed to be benefited thereby are not pertinent to the facts of the instant case. What was enforced was a contract obligation, not a charge undertaken to be involuntarily imposed by proceedings for the assessment against property claimed to be benefited of the cost of the paving in question.

The conclusion is that, for the reasons above indicated, and those stated in the opinion rendered by the District Judge, the court did not err in embodying the above-mentioned order in the decree appealed from.

That decree is affirmed.

(249 Fed. 194)

In re CLOVERDALE CREAMERY CO.

COLLINS BROS. ICE CREAM CO. v. MAREMONT.

(Circuit Court of Appeals, Seventh Circuit. January 11, 1918. Rehearing Denied Feb. 19, 1918.)

No. 2555.

BANKRUPTCY ⟹345—PRIORITY OF LIEN—TRUST DEED.

A creditor of a bankrupt corporation, which obtained a trust deed upon its property, expressly subject to a prior trust deed executed to secure the claims of other creditors, and which was delivered upon the condition and with the understanding that nothing was to be paid

⟹For other cases see same topic & KEY-NUMBER in all Key-Numbered Digests & Indexes

Digitized by Google

thereon until all the claims of other creditors were satisfied, thereby made its lien subordinate to the claims of bankrupt's other creditors, irrespective of the validity of the first trust deed.

Appeal from the District Court of the United States for the Eastern Division of the Northern District of Illinois.

In the matter of the Cloverdale Creamery Company, bankrupt; Leo S. Maremont, trustee. The Collins Bros. Ice Cream Company appeal to review an order holding the lien of a trust deed to appellant subordinate to the claims of other creditors. Affirmed.

Wm. A. Bowles, of Chicago, Ill., for appellant.

Henry S. Blum, of Chicago, Ill., for appellee.

Before KOHLSAAT, ALSCHULER, and EVANS, Circuit Judges.

PER CURIAM. The bankrupt, an Illinois corporation, executed a trust deed, covering all of its real estate, to a trustee to secure certain creditors whose claims aggregated $90,000. A note calling for payment "on or before five years from date" was also given by the bankrupt as a part of the same transaction. Later bankrupt executed a second trust deed, covering the same property, running to appellant, to secure payment of $28,750, which sum appellant claims was due it. Concerning these two trust deeds, the referee found as follows:

"About the 19th day of July, 1915, the bankrupt company, being embarrassed financially, called a meeting of its creditors and at such meeting a committee of creditors was appointed, and pursuant to arrangements made at such meeting, a trust deed for the sum of $90,000, an amount then deemed necessary to liquidate all the liabilities of the Cloverdale Company, was executed. This trust deed was made * * * to secure a note due on or before five years. * * * Shortly after the execution of this trust deed for the sum of $90,000, the trust deed for the sum of $28,750 was executed, delivered and recorded. The trust deed for $28,750 delivered to Collins Bros. Company was expressly by its terms made subject to the payment of the trust deed for the sum of $90,000, and was delivered upon the condition and with the understanding that nothing was to be paid thereon until all the claims of the creditors of the Cloverdale Creamery Company were satisfied."

Appellant's contention is that at least part of the creditors whose claims were secured by the first trust deed never accepted the security, but in repudiation thereof filed an involuntary petition in bankruptcy against the Cloverdale Creamery Company, and later presented their claims against the bankrupt estate. Appellant's position is that its second lien became a first lien through failure of the creditors to accept the security represented by the first trust deed.

The basis of appellant's contention—that the creditors never accepted the security represented by the first trust deed, but instead thereof threw the debtor into bankruptcy—finds no support in the findings or conclusions of the referee. The evidence, upon which the referee's findings were based, is not preserved, and there is nothing to justify us in assuming that the creditors did not accept the trust deed executed for their benefit or that any of them joined in a petition to have the debtor adjudged a bankrupt.

Digitized by Google

The decree should be affirmed, for the additional reason that appellant's trust deed "was delivered upon the condition and with the understanding that nothing was to be paid thereon until all the claims of the creditors * * * were satisfied." Irrespective of the validity of the first trust deed, appellant's lien was (under this finding) made subordinate to the claims of the bankrupt's other creditors.

The decree is affirmed, but without prejudice to appellant's right to assert its demand as an unsecured claim, and its allowance, if proved.

(249 Fed. 196)

NATIONAL SWEEPER CO. v. BISSELL CARPET SWEEPER CO.

(Circuit Court of Appeals, Second Circuit. January 16, 1918.)

No. 66.

1. PATENTS ⟹36—EVIDENCE OF INVENTION—COMMERCIAL SUCCESS.

That a patented article has been commercially successful is an unsafe test of invention, unless the art presents a case of earlier efforts, unsuccessful because of the absence of what the patentee contributed, and followed by a wide success after that contribution was made.

2. PATENTS ⟹328—INVENTION—CARPET CLEANER.

The Baender patent, No. 1,138,437, for a carpet cleaning device of the vacuum type and operated by hand, the wheels furnishing the power which operates the bellows, *held* void for lack of invention.

Appeal from the District Court of the United States for the Southern District of New York.

Suit in equity by the National Sweeper Company against the Bissell Carpet Sweeper Company. Decree for defendant, and complainant appeals. Affirmed.

For opinion below, see 242 Fed. 947.

Appeal from a final decree dismissing a bill in equity for the infringement of United States letters patent to C. L. Baender, No. 1,138,437, issued May 4, 1915, for a carpet cleaning device. The court below held the patent void for want of invention and the complainant appealed.

The patent was for a carpet cleaner operated by atmospheric exhaustion, or partial vacuum, and adapted to draw in along with the air and gather the dust from the carpet while the nozzle moved over its surface. The principle of its operation was that the hind wheels, upon which one end of the cleaner rested, were in mechanical connection with two bellows, so as to operate by their traction upon the carpet and in the forward motion of the cleaner alternately to compress and expand the bellows, thus creating a pressure less than one atmosphere. The air flowed in through the nozzle at the opposite end of the cleaner, which rested upon the carpet. There was a baffle plate within the dust chamber, designed to meet and throw down the heavier particles of dust, and at the top of the chamber a screen or filter to stop the finer particles of dust, so that they should not pass into the bellows. Claims 2 and 4 were in suit and read as follows:

"2. The combination in a pneumatic cleaner having traction wheels supporting the rear thereof, a dust receptacle removable from the cleaner and having a horizontal screen device in its upper portion, a suction nozzle supporting the front end of the receptacle, the exit from the nozzle entering the receptacle below the screen device, a suction device above the receptacle and connecting devices between the wheels and the suction device for operating the latter."

⟹For other cases see same topic & KEY-NUMBER in all Key-Numbered Digests & Indexes

Digitized by Google

"4. In a sweeping appliance, the combination of a dust receptacle, a nozzle communicating therewith and supporting the front end thereof, a suction device over said receptacle and communicating therewith, screening means located between the nozzle and suction device, wheels forming the rear support of said appliance, and operative connections between the wheels and the suction device adapted to operate said device upon the rotation of the wheels."

The defendant's infringing device is a carpet sweeper of the same general character as that described in the patent, having a horizontal screen in its upper portion, through which the air must pass and be filtered before reaching the bellows, and distinguishable from the patent in suit only in that a portion of the weight is carried by two idler wheels near the nozzle. Some part of the weight of the forward end is, however, borne by the nozzle itself, and the issue of infringement turns upon whether, in spite of these wheels, the nozzle supports the front end of the receptacle. The greater part of the defendant's manufacture consisted of a cleaner of the same kind, except that, in conjunction with it, there was an old rotary broom operated by two traction wheels on each side. The issue of infringement is the same as to this machine as to the first; the nozzle bears some part of the weight of the forward end of the cleaner.

The art of vacuum cleaners was not new. In 1901 D. T. Kenney made application for a patent for such a cleaner, in which the suction apparatus was fixed permanently in the floor, preferably in the basement, and the partial vacuum was created by a suction pump operated by an engine connected with a large chamber. From the other side of the chamber there extended pipes of any length, which might go into several stories, and at the end of which there was a nozzle on a rod or handle. The operator could turn on or off the suction, and by pushing the nozzle over the carpet draw out the dust, which passed through the piping into the chamber. In Kenney's device two screens or filters were inserted between the pump and the chamber, so as to catch all dust which had passed into the chamber and had not been already precipitated to its bottom.

In 1896 J. J. Harvey applied for a patent (granted 1897, 577,854) of a similar sort, in which the suction bellows was operated at some distance from the nozzle by one man, while the nozzle was held and moved by another. This type is known as a two-man machine. In this a screen or filter was interposed between the nozzle and the bellows, to filter out all dust. In 1900 C. J. Harvey filed an application for a patent (granted in 1901, 673,603) for a vacuum cleaner operated manually by the compression of a piston within a cylinder. The piston was itself hollow, and had a nozzle at one end, and on expansion low pressure or partial vacuum was created within the interior of the piston, to equalize which air was forced through the nozzle and later passed into the cylinder chamber. Within the piston was placed a screen or sack filter to catch the dust and keep it from the valves in the piston head.

In 1905 one Conover applied for a patent (granted 1907, 847,278) for a vacuum cleaner in which the weight was supported in part by the nozzle and in part by two traction wheels about midway between the two ends, and in which the dust passed through the bellows and into a dust bag put over the top of the machine. This was the first machine driven by traction wheels and designed as a substitute for the old-fashioned hand-driven carpet sweeper. Buell, 949,370, and Dudley, 924,542, were machines of the same kind, each application being earlier than Baender's, but later than the date to which it must be assumed in this record he could carry back his invention.

The plaintiff's machine, which embodied not only the Baender patent, but Sturgeon's, 996,810, and Quist & Blanch reissue, 13,508, quickly attained wide popularity and sale. In its earlier form it contained no auxiliary carpet brush sweeper, but subsequently this was added to pick up the larger particles which would not pass through the nozzle.

C. L. Sturtevant, of Washington, D. C., Louis W. Southgate, of New York City, and L. S. Bacon, of Washington, D. C., for appellant.

Drury W. Cooper, of New York City, and Fred L. Chappell, of Kalamazoo, Mich., for appellee.

Digitized by Google

Before WARD and HOUGH, Circuit Judges, and LEARNED HAND, District Judge.

LEARNED HAND, District Judge (after stating the facts as above). The patent can succeed over Conover only by virtue of the position of the screen and of the wheels. To place the screen between the nozzle and the suction device was old in other forms of the art. It existed in Kenney, in C. J. Harvey, and J. J. Harvey. The only color for invention in this particular arises from the fact that these latter are not hand-driven machines, deriving their power from traction wheels, upon which their weight rests. As a new question, and without its subsequent success, we should have no question that the position of the screen on the near side of the bellows was not invention, in the face of the disclosures in this case. Indeed, we should have great doubt whether, without those disclosures, it would be invention to screen out the dust before it reaches the bellows, rather than to let it pass through and clog the valves. We find it difficult to look at this feature, except as one which the inevitable course of experience in the art would have soon suggested, if it has not been done at the outset, and as one which, once suggested, required no mechanical invention to adapt to a hand-driven carpet sweeper.

[1] The plaintiff must rely, therefore, and, indeed, it does largely rely, upon the success which its sweeper has attained, and we are forced, therefore, to a consideration of the propriety of that test here. It is true that the books are full of cases in which courts have regarded the success of the plaintiff's patent as an important test of invention, and we are in no sense disposed to question its value in proper cases. Yet it is a hazardous rule, and one which is quite likely to result in confusing genuine invention with imagination in advertising and energy and business skill in promotion. Where the art presents a case of earlier efforts, unsuccessful because of the absence of what the patentee contributed, and followed by a wide success after that contribution was added, it is reasonable to infer that the art needed that feature, and that it was not so easy to invent as might seem to us, who necessarily have no proficiency in the art.

It by no means follows that every successful exploitation of a patent complies with these conditions; there are many other reasons for success, which need not be detailed. In the case at bar three companies commenced the manufacture of these cleaners, all substantially similar in kind, and each competed with the other two. The Domestic Company commenced selling them as early as 1910, and its sales rapidly increased. The Wright Company began its sales early in 1911, and likewise quickly became successful. The National Company began at some time not definitely stated, before which and in 1908 Baender had made some 2,000 machines—at least, such is the assertion. The mutual competition of these companies compelled a consolidation of their interests, which occurred in January, 1916. Now, we may assume for argument's sake that each of these companies manufactured from the outset under each of the three patents, and that the credit of the invention is to be attributed equally to all; yet it is obviously quite impossible to say that the success was due to any one of the

Digitized by Google

elements contributed by all. It is, indeed, impossible, upon this record, or upon all three records, for us to say that the success was due to all three together, assuming that would serve if we did. We do not question that success awaited any successful hand-driven vacuum cleaner; but we must be able to attribute the success to the invention, and the dominant idea rested, as it seems to us, rather in the general conception of such an appliance, set forth certainly in Conover, which, if indeed it was as it stood, likely to become clogged in the valves, only required changes sure to be realized as the art progressed, and already disclosed in three varieties of existing cleaners of other species.

The "idea" of such a cleaner seems to have become fruitful at about this time in many instances: Buell, Dudley, Baender, Sturgeon, Applegate, and Quist, all between 1907 and July, 1910. Conover it is true, was earlier, his British patent dating from 1904; and if there was any basic disclosure it was this, upon these records. Yet, disregarding Conover, the art presents a picture suggestive rather of a commercial opportunity discovered than any necessary invention. Each of these patents would, so far as we can see, have answered as well as any other, with such modifications as would be sure to suggest themselves in the progress of the art. In such a case, we ought to scrutinize, not without some jealousy, the claims of any single contributor to a monopoly of his own details.

The conclusion of the examiners in chief finally granting the patent scarcely justifies the assumption that the position of the screen weighed very much in their minds. They appear to have depended quite as much upon the distribution of the load between the wheel and the suction nozzle, an advantage which turned out to be of no moment, or perhaps upon the general compactness and advantage of the arrangement of the parts, which is not claimed, and hardly could be. Furthermore, the appearance in the art, even if it was in fact later than Baender's invention, of the device of Ander's British patent, suggests that there was no divination necessary to the location of the screen where Baender placed it.

We agree, therefore, with the District Court in holding the patent void for lack of invention, and the decree will be affirmed, with costs.

(249 Fed. 199)

M. S. WRIGHT CO. v. BISSELL CARPET SWEEPER CO.

(Circuit Court of Appeals, Second Circuit. January 16, 1918.

No. 67.

PATENTS ⟹328—VALIDITY—ANTICIPATION—CARPET CLEANER.

The Sturgeon patent, No. 996,810, for a pneumatic carpet cleaner, the special feature of which is the arrangement of the V-shaped bellows, *held* void for anticipation in the prior art.

Appeal from the District Court of the United States for the Southern District of New York.

⟹For other cases see same topic & KEY-NUMBER in all Key-Numbered Digests & Indexes

Digitized by Google

Suit in equity by the M. S. Wright Company against the Bissell Carpet Sweeper Company. Decree for defendant, and complainant appeals. Affirmed.

For opinion below, see 242 Fed. 950.

Appeal from a judgment dismissing a decree in equity for the infringement of a patent to Harold M. Sturgeon dated July 4, 1911. The claims in suit, No. 1 and No. 2, are as follows:

"1. The combination in a pneumatic carpet cleaner, of a dust box, a screen device slidably mounted in the upper portion of said box adapted to be removed and replaced within said box, a suction nozzle secured to and supporting the front end of said box the exit therefrom entering said box under said screen device, journal bearings secured to the rear end of said box, a crank shaft in said bearings, cranks in said shaft, a suction device above said box communicating with the interior thereof above said screen device, pitmen extending between the cranks in said crank shaft and said suction device, and traction wheels secured on said crank shaft, adapted to support the rear end of said dust box and rotate said crank shaft, substantially as set forth.

"2. The combination in a pneumatic carpet cleaner, of a dust box, a drawer in the bottom of said box, a horizontal screen device in the upper portion of said box, a suction nozzle secured to and supporting the front end of said box the exit from said nozzle entering said box below said screen device, a suction device upon the top of said box, wheels supporting the rear end of said box, a crank shaft connecting said wheels, and pitmen extending between the cranks on said shaft and said suction device, substantially as set forth."

The patent is for improvements in a vacuum carpet cleaner of the same general type as that considered in the opinion handed down at the same time in National Sweeper Co. v. Bissell, 249 Fed. 196, 161 C. C. A. 282. The peculiar improvement of this patent consists in the arrangement of the V-shaped bellows which are hinged at the forward end and move at the other, together with the crank and pitman mechanism attached to the traction wheels by which the bellows are operated. One of the purposes of the invention was to make the vibration of the bellows all at the wheel end, so that their movement should not jar the nozzle from the carpet and affect its suction.

In 1909 one Applegate applied for a patent, granted 1909, 1,016,600, for a vacuum cleaner driven by traction, and disclosed three V-shaped bellows, two hinged at the forward end, and one at the rear end. These were operated by the traction wheels through cam and pitman. Conover, 847,298, and Buell, 949,370, had a connection by crank and pitman between wheel and bellows, each in a machine of the carpet sweeper type. The Baender patent was also pleaded as an anticipation in this suit.

L. S. Bacon, of Washington, D. C., Louis W. Southgate, of New York City, and C. L. Sturtevant, of Washington, D. C., for appellant.

Drury W. Cooper, of New York City, and Fred L. Chappell, of Kalamazoo, Mich., for appellee.

Before WARD and HOUGH, Circuit Judges, and LEARNED HAND, District Judge.

LEARNED HAND, District Judge (after stating the facts as above). Applegate seems to us a complete anticipation of this patent. It was a pneumatic carpet cleaner having a dust box. It had a screen slidably mounted in the upper part of the box which could be removed and replaced. It had a suction nozzle in front, and while this nozzle did not support the front end in the same sense as Sturgeon's nozzle, it did so in the sense that even the defendant's first form supported it. To operate at all the nozzle of such a machine must bury into the nap

Digitized by Google

of the carpet far enough to establish a difference of air pressure within the box and the bellows. As the nap is resilient this necessarily involves some upward pressure against the nozzle, which means that the latter in some measure supports the front end. We do not say that the claims mean this; but, if they do not, the defendant does not infringe, and the plaintiff must insist upon that interpretation. If so, the only invention remaining must be in the percentage of the weight carried by the nozzle, which would not be the subject of a patent. Applegate has journal bearings and a crank shaft, with crank and pitman between it and the suction device. It is, of course, true that there is literally no crank, though there is a pitman; but we cannot treat very seriously any supposed distinction between Applegate's actual disclosure and Sturgeon's in this regard, in view of Conover and Buell in exactly the same art. Finally, Applegate has "suction devices," and, indeed, his suction devices are the same as those disclosed by Sturgeon. Now, it is true that one of his bellows is reversed, so that its hinge is to the front, and it may be argued with some plausibility that he could not have apprehended the advantage of Sturgeon's arrangement. The whole argument is, however, irrelevant, because not only does neither claim have any such limitation, but it is even apparent that the very V-shaped bellows was not an element of the patent. It is disclosed only as a preferable form (page 2, lines 31, 44), and the claims clearly pretend to generality in respect of the suction devices.

Claim 2 is no better, for we do not attach any importance to the "drawer therein" specified, as distinct from the "screen," merely, of claim 1.

Were Applegate alone not enough, we should not allow the claim any validity, after remembering Baender, Conover, and Buell, upon which it can at best be only an improvement.

No discussion of the success of the machine is necessary, beyond what we have said in the case of National Sweeper Company v. Bissell Carpet Sweeper Company.

Decree affirmed, with costs.

(249 Fed. 201)

DOMESTIC VACUUM CLEANER CO. v. BISSELL CARPET SWEEPER CO.

(Circuit Court of Appeals, Second Circuit. January 16, 1918.)

No. 57.

PATENTS ⟹328—VALIDITY—INVENTION—CARPET CLEANER.

The Quist & Blanch reissue patent, No. 13,408 (original No. 976,494), for a pneumatic carpet cleaner, *held* void for lack of invention, in view of the prior art.

Appeal from the District Court of the United States for the Southern District of New York.

Suit in equity by the Domestic Vacuum Cleaner Company against the Bissell Carpet Sweeper Company. Decree for complainant, and defendant appeals. Reversed.

For opinion below, see 242 Fed. 943.

⟹For other cases see same topic & KEY-NUMBER in all Key-Numbered Digests & Indexes

Digitized by Google

This is an appeal from an interlocutory decree for infringement of reissued patent 13,508 to Quist & Blanch, granted July 7, 1913. This patent is for an improvement upon vacuum cleaners of the carpet sweeper type and the suit involves claim 4, which is as follows:

"A pneumatic cleaner comprising a casing opening at its front end, a dust receptacle in said casing detachably connected therewith, a nozzle head detachably connected with said casing and covering the open front thereof and the open end of said dust receptacle to hold the dust receptacle in position, said nozzle being provided with an opening therethrough connecting with said dust receptacle, a suction creating device connected with said casing, and sustaining wheels connected with said casing and operatively connected with and operating said suction device by the backward and forward travel over any surface."

The essential novelty of the patent rests in the fact that the nozzle head is detachably connected with the casing and covers the open front. In the defendant's device the nozzle head and the screen or stiff bag within which the dust is drawn is all one piece. The screen is inserted into the dust chamber and the nozzle head fits close to the case, making an air-tight joint. A question of infringement arises since the defendant's dust receptacle is fixed to the nozzle head, while the defendant contends that the claim requires detachability between the nozzle head and the dust receptacle. The District Court construed the claim as not requiring such detachability and held the patent valid over all references.

Hatch & Goeser, 980,944, disclosed a vacuum cleaner which operated by an electric suction fan. The whole cleaner was compact in one piece and was rolled about the floor by the operator. It contained a small motor, which operated the fan, to which the current was brought by a wire attached to a socket in the room. At the end opposite to the wheels was a nozzle head fitted into the end of the dust chamber proper and within that chamber was the dust bag detachably connected with the nozzle. The nozzle was removable from the bag and from the end of the casing, and the front end of the machine rested upon the nozzle.

Drury W. Cooper, of New York City, and Fred L. Chappell, of Kalamazoo, Mich., for appellant.

Louis W. Southgate, of New York City, and C. L. Sturtevant and L. S. Bacon, both of Washington, D. C., for appellee.

Before WARD and HOUGH, Circuit Judges, and LEARNED HAND, District Judge.

LEARNED HAND, District Judge (after stating the facts as above). We think this patent void under Hatch & Goeser. The only differentiation between claim 4 in suit and the reference is the last part of the claim, which puts this cleaner into the class in which the suction is mechanically created by traction. In declaring invalid the Baender patent, we have determined that in all these species of cleaners the art had recourse to the various forms theretofore existing. There we said that the position of the screen in a large stationary cleaner like Kenney was available to an inventor of the carpet sweeper type; as was the position of the screen in "the two-man" type, and in the piston or plunger type. We draw no distinction between suction, created by mechanical and electrical energy, nor between a bellows and a fan. Indeed, this small one-man device of Hatch & Goeser seems to us nearer to the patent in suit than the installation of Kenney, or the "two-man" machine of J. J. Harvey was to Baender's disclosure, and of the patents Baender more nearly approaches the standard of invention than the other two.

Digitized by Google

Nor are we impressed with the suggestion that Hatch & Goeser's connection of nozzle to casing was not air-tight. We must take the patent as operative, because it passed the examiner and has not been successfully attacked in that respect. So far as our knowledge permits us an opinion the joint closed by the gasket *73*, which is pressed in place by the pressure of the threaded flange, *70*, would make an air-tight joint. Both faces against which the gasket is to bear are finished.

Nor may we, without redrawing the claim, rely upon the simplicity of the means by which the nozzle is detachably connected; the claim is barely for detachability. Indeed, we should a little hesitate to find any invention in a detachable nozzle without any reference whatever, though that question is not presented.

The decree is reversed, and the bill dismissed, for lack of invention, with costs.

(249 Fed. 203)

McCORD & CO. v. WOODS et al.

(Circuit Court of Appeals, Seventh Circuit. October 26, 1917. Rehearing Denied December 18, 1917.)

No. 2356.

1. PATENTS ⟹328—VALIDITY AND INFRINGEMENT—JOURNAL BOX.
The Woods patent, No. 904,665, for a composite journal box, was not anticipated in the prior art, and discloses invention in the feature of corrugations extending continuously across the bottom and up the sides. Claim 2 *held* infringed, and claim 3 not infringed.

2. PATENTS ⟹328—VALIDITY AND INFRINGEMENT—JOURNAL BOX.
The Woods patent, No. 969,933, for a journal box, *held* not anticipated and infringed.

Appeal from the District Court of the United States for the Eastern Division of the Northern District of Illinois.

Suit in equity by Leonard G. Woods and Union Spring & Manufacturing Company against McCord & Co. Decree for complainants, and defendants appeal. Modified and affirmed.

Edward Rector, of Chicago, Ill. (James F. Williamson, of Minneapolis, Minn., on the brief), for appellants.

Frederick W. Winter, of Pittsburgh, Pa. (Thomas F. Sheridan, of Chicago, Ill., on the brief), for appellees.

Before BAKER, ALSCHULER, and EVANS, Circuit Judges.

EVANS, Circuit Judge. From a decree sustaining two patents, issued to Leonard G. Woods, the first being No. 904,665, granted November 24, 1908, and the second being No. 969,933, granted September 13, 1910, adjudging both patents infringed by appellant, and enjoining further infringement, this appeal is taken. Defenses are invalidity and noninfringement.

[1] Both patents pertain to a journal box. Claims 2 and 3 of the first patent, found to be infringed, read as follows:

Claim 2: "A journal box composed of a pressed plated body portion comprising sides and bottom *provided with corrugations extending continuously*

⟹For other cases see same topic & KEY-NUMBER in all Key-Numbered Digests & Indexes

Digitized by Google

across the bottom and up the sides, and rigid top portion of metal of a different character, secured to the body portion."

Claim 3: "A journal box composed of a pressed plate body portion comprising sides and bottom open at the inner end and provided with corrugations extending continuously across the bottom and up the side portions, a rigid top portion of metal of a different character secured to the body portion, *and a dust guard pocket spaced from the inner end of said body portion and secured thereto.*"

Claims 1 and 2 of the second patent, in issue in this suit, and found to have been infringed, read as follows:

Claim 1: "A journal box composed of a pressed plate body portion comprising sides and a bottom, and a rigid top portion of metal of a different character provided on its side edges with continuous deep vertical flanges to which the body portion is secured, and having outwardly projecting journal box lugs, *and braces extending from the side flanges to said lugs, said braces being provided with vertical slots or kerfs* for receiving the top edges of the sides of the body."

Claim 2: "A journal box composed of a pressed plate body portion comprising sides and a bottom, and a rigid top portion of a metal of different character, provided on its side edges with continuous deep vertical flanges to which the body portion is secured, and having outwardly projecting journal box lugs, *and braces extending from the side flanges to said lugs, said braces being provided with vertical slots or kerfs* for receiving the top edges of the sides of the body, *said body being provided with vertical corrugations or ribs extending upwardly above the lower edges of said flanges.*"

As a defense to the first patent, appellant cites the prior art evidenced by patents to Charles T. Schoen, No. 482,200, dated September 6, 1892, and to E. W. Hughes, No. 436,355, dated September 16, 1890, and to W. H. Shinn, No. 860,254, dated July 16, 1907, and to others, covering car journal boxes. Journal boxes were first made of cast iron; later malleable iron was used. Nearly all journal boxes first used were cast in a single, integral piece, with the walls of sufficient thickness to withstand the strain to which the box was subjected.

The boxes under consideration are composite, the top being separate from the body or cellar, and made of cast steel, that material being well suited to resist the heavy loads and the wear due to the friction of the bearing parts. The body, generally known as the cellar, and made of wrought iron, are of high tensile strength. A composite box has its advantages when the double purpose of holding bearings and withstanding strains is considered. A decrease in weight is also obtainable without corresponding loss of strength.

Schoen produced a composite box as early as 1892, which he covered by patent. He says in his description:

"I do not limit my invention to these details, inasmuch as my invention consists broadly in a journal box having its body of pressed steel or like wrought metal and a *separate top.*"

Two of his claims read as follows:

Claim 1: "A journal box comprising an independently constructed top of suitable material and formation, combined with a body of wrought metal, such as pressed steel, made separate from the top and composed of sides, bottom, and rear wall, and a front lip made integral and fitted and secured to such a top, substantially as described."

Claim 3: "In a journal box, a wrought metal body provided with lateral shoulders *O* and a bottom groove *P*, combined with a partition-plate *Q* fitted

Digitized by Google

therein, to separate off or form in the rear of the box a compartment for the reception of the dust-guard, substantially as described."

It is claimed the Schoen product was not a commercial success. Eight or ten boxes only were made. They were not provided with continuous corrugations, and it does not satisfactorily appear that the boxes built entirely responded to the description of the patent.

The claim of the Hughes patent did not cover the continuous corrugation specified in the Woods patent above set forth, but appellant claims that this element was disclosed in the drawings and description. In describing his product Hughes says: "The exterior flanges strengthen the box." Figure 3 is taken from the drawings in the Hughes patent, and letters, *C, D,* disclose the "exterior flanges" upon which appellant relies, as an anticipation of Wood's continuous corrugations.

Appellees well describe the distinguishing element in their patent, as follows:

FIG. 3.

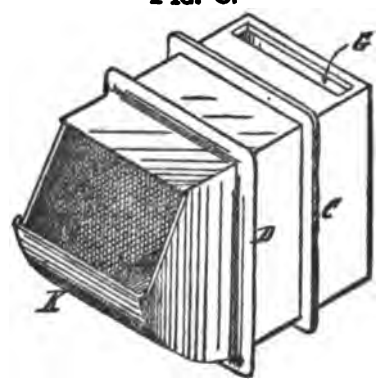

"In this combination the use of the continuous corrugation down the sides and across the bottom is the new and essential feature in composite journal box construction. It is absolutely new in such a box. Defendant has scoured the art, and while it showed a paper patent with a cast top and the wrought metal body or cellar, it could not find the continuous corrugations in the body portion. * * * The paper art showed side corrugations and cross corrugations in the body, but *not in line and not connected,* and leaving *the corners entirely unbraced.* It is by making the corrugations continuous extending around the corners that the boxes were given their main capacity to withstand this tremendous strain."

An examination of the file wrapper in the Patent Office emphasizes this distinction. The original claims 5, 6, and 7 dealt with the corrugations; claim 7 being as follows:

Claim 7: "A journal box composed of a pressed plate body portion comprising sides and bottom, said sides being provided with a vertical corrugation or corrugations, and a rigid top portion of metal of a different character secured to the body portion."

All claims were rejected by the Patent Office and new ones substituted, No. 6 being as follows:

Claim 6. "A journal box composed of a pressed plate body portion comprising sides and bottom open at the inner end and provided *with corrugations extending continuously across the bottom and up the side portions,* a rigid top portion of metal of a different character secured to the body portion, and dust-guard picket spaced from the inner end of said body portion and secured thereto."

This claim was at first rejected, the Patent Office using the following language:

Digitized by Google

"Claims 6 and 7 are rejected on Schoen above, there being no invention in corrugating the box wherever desired, this being an old expedient in the art."

Patentee then presented his argument in favor of continuous corrugations, using the following language:

"With reference to claims 5 and 6, *while it undoubtedly is not patentable to provide corrugations for strengthening*, we submit that this is only a general rule and does not preclude claims which specify particular manners or agreements of corrugations. Both claims 5 and 6 specify that the corrugations extend *continuously* across the bottom and up the sides, thereby not only stiffening and strengthening the bottom and sides but give strength *at the corner* where it is needed with this character of device and on account of strains to which the same is subject. These claims do not cover broadly the corrugations on either the bottom or the sides but only a *specific kind* of corrugation, one going *continuously around the corners and up the sides*."

The claim, slightly modified, was thereafter allowed as claim No. 2 above quoted. The validity of this claim No. 2 is thus made to depend solely upon the *continuous* corrugations.

Appellees rely upon the decision in the case of Stillwell v. McPherson, 218 Fed. 839, 134 C. C. A. 611. They also cite the action of the Patent Office in recognizing particular corrugations as the essential and novel element in claims found in some 75 patent grants; they further urge that practically all of the journal boxes in use in the United States were of the integral cast type, prior to the appearance of the Kensington (appellees') box; that notwithstanding the insufficiency of the integral cast type was recognized, and efforts made to produce a successful composite box, none appeared until the appellees placed their product on the market; that appellants, although in control of the industry, were forced to produce a composite box similar to appellees' product; that neary 1,000,000 Kensington boxes were sold in the first seven years.

In reply appellant points to the fact that the Schoen patent expired in 1909 and that if an increase in the production of the composite box occurred shortly thereafter it was due to the expiration of the Schoen monopoly. Answering the argument that invention was disclosed by the fact that some 865,000 Kensington boxes were sold in the first seven years after the issue of the Woods patent, appellant showed that over 550,000 of these boxes were used by one railroad company; that the president of this railroad and the president of the appellant, the Union Spring & Manufacturing Company, were father and son; that a change in the presidency of the latter company was immediately followed by a termination of orders from the railroad company; that the total number of boxes sold after the termination of this contract was insignificant. Appellant also denies being forced to adopt appellees' type of journal box, but claims that its composite box is radically different from appellee's structure, being an integral composite style adapted for use on all types of railroad car trucks, which is not the case with the Kensington box.

The case of Stillwell v. McPherson, supra, furnishes some support for appellees' contention, but may be somewhat distinguished in point of fact because of the difference in the prior arts, and because of the difference in the action of the patentees before the Patent

Digitized by Google

Office, and because the particular location of the corrugation in reference to the culvert was an emphasized element in the Watson (culvert) patent.

The prior art in the instant case is not conclusive. The Hughes patent disclosed continuous exterior flanges as shown in the drawings represented by Figure 3 produced above. Symington patent, No. 794,259, and No. 855,361, discloses journal boxes with the strengthening means called ribs. The Cochran patent, No. 845,728, described the strengthening element therein referred to as a flange. In fact, the specifications of the master car builders' journal box provided for corrugation to strengthen.

In the nonanalogous art, the patent to Schoen for a "stake pocket" for cars, No. 381,174, dated April 17, 1888, disclosed corrugations that were continuous and appeared in parallel pairs.

It is obvious that strength was one of the prime essentials of a successfully constructed journal box. Not only was great tensile strength necessary in such a box, but the strengthening means used by appellee made possible a lighter box and lessened the cost of construction.

The difficulty in reaching a correct conclusion in this case has arisen over the question: In view of the prior art, was Woods' contribution merely an exercise of mechanical skill, or did it display inventive genius? This is a border line case. Measured by the usual tests, however, we conclude that Woods' improvement constituted an invention.

That something more than mere mechanical skill was required in the use of continuous corrugations in a composite journal box is suggested by the study and experience of Schoen, upon whose patents appellant relies. Schoen produced a composite journal box in 1892, for which he obtained a patent. He also invented the car "stake holder" with continuous parallel corrugations for strengthening purposes, for which he obtained a patent in 1888. Schoen was a man of acknowledged ability, both as a mechanic and as a manufacturer of car appliances, including journal boxes. He sought a successful composite journal box, and yet it did not occur to him to make use of the continuous corrugations to secure the necessary strength.

Likewise the experience of the appellant is instructive. For many years appellant manufactured a large percentage of all the journal boxes used in this country. For seven or eight years it admittedly endeavored to develop a successful composite journal box. During all of that period the patents now relied upon by it to prove anticipation were subject to the study of its mechanics and engineers. In face of the fact that it never occurred to the appellant to use the continuous corrugation in the composite box, we are not justified in concluding that the use of such means by Woods was an exercise of mechanical skill. This conclusion is strengthened by reason of the further fact that appellant, after Woods pointed the way, made use of the same means to strengthen its box.

Claim No. 3.—The italicized words appearing in this claim, quoted above, supply the additional element which distinguishes this from the last-considered claim. All journal boxes are provided with dust

Digitized by Google

pockets. Their purpose is obvious, being indicated by the name. They are invariably specified in the master car builders' journal boxes. A commonly accepted type is made by using a piece of board fitted with the pocket to prevent the entrance of dust into the rear end of the box. Fitted closely and supplemented by applications of oil, these boards are efficient in keeping out the dust.

Woods' pocket differed from other types, in that he provided a separate piece outside or beyond the rear wall of the box and riveted thereto. He added strength to the box by the stiffening effect of the dust guard. It was the dual purpose of a dust guard, which served not only to keep out the dust, but also to strengthen the box at the particular place where strength was required which constituted appellee's claim to invention. The expert testimony supports the claim that the reinforcement of the journal box by the dust guard at the place of attachment, provided for in Woods' patent, was of practical value and served to make a stronger and a better box.

We are of the opinion that the location of a dust guard at the place and fastened in the manner described in this claim is invention, and as such is entitled to protection.

Noninfringement of Claim No. 3.—Appellant, however, contends that its journal box does not infringe this claim. It must be conceded that its journal box is provided with a dust guard, which differs from the one described in the Woods patent, in that the former is an integral part of the journal box, and is spaced forward and inward, instead of outwardly from the inner end of said box.

Again, the file wrapper is important so far as it differentiates the Schoen patent from the Woods patent, and as thus differentiated it appears that no infringement is shown. Woods' claim, as first filed, described the dust guard element as follows:

"*And a pressed metal dust guard pocket*, said part being secured together."

This claim was rejected, and the following claim of a dust guard pocket was inserted:

"And a pressed metal dust guard pocket, *spaced from the inner end of the body and secured thereto.*"

Upon the Department's citing the Schoen patent, Woods distinguished his dust guard as follows:

"Schoen's box is shown as provided with *an inner end portion* M *integral with the body*, thus having the body in the form of a box closed at all sides except top and portion of the outer end. * * * In the patent to Schoen, the dust guard pocket is formed *by the rear wall of the box*, which extends from the bottom to the top and is integral with the bottom and side walls, *and a separate plate located inside of the end wall and spaced therefrom.* In applicant's box the inner end of the box is merely turned up slightly to form a shallow bottom flange, and the dust guard pocket is formed by a plate flanged on its bottom and the two sides fitting over the end of the box and secured thereto; *said plate being spaced from the end of the box.*"

Having secured this claim by distinguishing the Schoen box in the respects quoted above, patentee cannot now assert infringement by a structure substantially identical with the product thus distinguished.

Digitized by Google

If appellants' dust guard is the mechanical equivalent of the Woods dust guard, then it follows that claim No. 3 was anticipated by Schoen. We conclude, however, that the Patent Office properly differentiated the Woods patent from the Schoen product, and for the same reason the appellants' box must be distinguished from the Woods patent.

Claim No. 3 is valid, but not infringed.

[2] Patent No. 969,933.—The two claims of this patent have been quoted, and the italicized words emphasize the asserted novelty in each claim. The patent covered an improvement in the composite journal box of the type disclosed in the Woods first patent. Patentee's aim was to obtain greater strength, more resistance, at the points and places found weak in the boxes made pursuant to the prior patent, and this was accomplished by providing the rigid top portion and its side edges with—

"continuous deep vertical flanges to which the body portion is secured and braces extending from the side flange to said lugs, said braces being provided with vertical slots or kerfs for receiving the top edges for the sides of the body. * * *"

An examination of the file wrapper shows that it was a flange *with connected lugs and braces, the braces being provided kerfs,* that supplied the novel element in the new box. Claim 1 as originally filed describes the body as—

"provided on its side edges with continuous deep, vertical flanges to which the body is secured."

This claim was rejected in view of the patent to Schoen. Upon patentee's pressing his claim the examiner said:

"Claim 1 is again rejected on Schoen of record, it is not seen that the claim disclosed anything beyond what any mechanic has a right to do; i. e., make the attaching flange at the top of the box in one piece instead of several smaller lugs and make it somewhat longer (or deeper). This does not constitute patentable novelty."

Upon further amendments, the claims assumed the form above quoted, and were allowed. The description of the flange and lugs is instructive:

"* * * Along its side edges on its lower face it is provided with the continuous depending flanges *19* fitting inside the pressed body portion and serving as a means to secure the top and body portion together, such as by means of rivets driven through the flanges and the sides *2* of the body. These flanges are continuous for the length of the box and are of considerable depth, thus giving material strength, bracing the box and tending to keep it square. Midway of their lengths these flanges are extended to a considerable depth, always in contact with the sides of the body so as to brace the latter, and also forming shoulders *22* for holding the journal bearing. Near its forward end the top is provided with lugs *23* which act as stops for the journal box wedge."

"On its side edges the box is provided with the lugs *24*, which are provided with holes *25* for receiving the journal box bolts. These lugs *24* are stiffened by means of braces *26* connecting the same with the flanges *19*. These braces also strengthen the inside shoulders *22*. The sides *2* of the body are notched or cut away, as indicated at *27*, to fit around these braces. The braces *26* are recessed from below, so as to provide vertical kerfs or slots

Digitized by Google

28 into which the top edges of the body fit. The braces are preferably rounded off at their lower ends, as shown at 29, in order to assist the edges of the body to enter the slots when assembling. The plate sides of the body have a tight fit in said slots. The slots serve to prevent the sheets from bending or yielding when there is a tendency to force the box out of square. They also permit the braces 26 to be made deeper than would otherwise be the case. The deep braces and flanges support the sides of the body quite low down, and hence increase the strength and rigidity of these sides. The slots prevent movement of the box sides in either direction."

Appellant urges that the structure so described is anticipated by the Schoen patent, and the claims are void for the lack of patentable invention. While it might be admittted that the Schoen box has bolt lugs somewhat similar to those appearing on the Kensington box and these lugs necessarily support and strengthen the side walls of the box, and the extension of lugs into a continuous body flange may be but an exercise of mechanical skill, as suggested by the Patent Office, yet it is apparent that the Schoen box has no brace of the form and shape and location described in the Woods structure. It is this improvement upon which the Woods box asserts its claim to patentability.

The utilization of bolt lugs as a basis for the construction of braces attached to the continuous flange, which is in turn securely fastened to and braces the walls of the body, supports (in theory at least) the contention that greater strength is thereby obtained in a box that is peculiarly subject to strains and pressure. Appellee also urges that the uses of kerfs at the bottom of the brace as here shown extends the support below the flange, and is distinctive of the Woods patent, and is indicative of merit. The expert testimony of the witnesses supports this theory of the patentee.

In view of the advantages to the trade of a successful composite journal box, we are not inclined to lightly reject any advance in the art which gives strength to a box. We therefore hold that the claims are valid.

Noninfringement.—Appellant's box is of a composite type, the top being of a metal different from the body, and is provided with deep, continuous flanges extending down from the top on the inside and outside of the walls of the body. It is an integral composite box; the top being of a different metal from the bottom, but the two parts molded together. It is also provided with bolt lugs. Some of these elements, while common to both appellants' and Woods' box, alone or collectively, are old in the art. Unless the appellant's box is provided with braces extending from the inside flange to the lugs, and these braces in turn are made with vertical slots or kerfs to receive the top edges of the body, there is no infringement.

Appellant admits its box has some of the elements of the combination described in the claims above quoted. It has "a pressed plate body portion comprising sides and a bottom"; also "a rigid top portion of metal of a different character"; it also admits the top on its "side edges" is a "continuous deep circle flange to which the body portion is secured"; also it admits having "outwardly projecting journal box lugs." To constitute infringement, however, another element must

Digitized by Google

appear, and the dispute over the alleged infringement turns upon the presence or absence of this element. In claim No. 1 of Woods' patent, this element is described as "braces extending from the side flanges to said lugs, said braces being provided with vertical slots or kerfs for receiving the top edges of the sides and body."

That the portion of the continuous outer flange in appellant's box that leaves the walls of the body of the box and encircles the bolt, and is securely attached to the extending bolt lug, corresponds to the brace described in this claim is too apparent to require argument. But to constitute infringement this brace must extend from the inner side flange to the lug, and must also be provided with a kerf.

The testimony on this phase of the case shows clearly that appellant securely connected the brace to the lug on the one side and the inner flange on the other. This was done by drilling or punching holes through the walls of the body of the box at points opposite the center portion of the inner flange and above the bottom of the brace. In the casting operation, the molten metal used for forming the top ran through these holes and effectually connected the inner flange to the brace. Necessarily a slot or kerf from the bottom of these holes to the bottom of the brace resulted. We therefore find the corresponding brace serving a corresponding purpose in appellants' journal box, as is described in the Woods patent.

A separate consideration of claim No. 2 we deem unnecessary. It is valid and infringed.

While it may well be that appellant has made improvements on the Woods journal box, and it may also be true that not all of its boxes infringed the Woods second patent, these facts do not justify the court's refusing an injunction or in directing an accounting.

The decree entered by the court below is modified, in so far as it adjudges the appellant infringed claim No. 3 of patent No. 904,665, and, as so modified, is affirmed. Each party shall pay its or their costs in this court.

(249 Fed. 211)

BONE v. COMMISSIONERS OF MARION COUNTY.

(Circuit Court of Appeals, Seventh Circuit. October 2, 1917. Rehearing Denied December 17, 1917.)

No. 2459.

PATENTS ⟹328—VALIDITY AND INFRINGEMENT—RETAINING WALL.

The Bone patent, No. 705,732, for a retaining wall of the cantilever type of reinforced concrete, conceding that it discloses invention, does so only by reason of the location of the reinforcement, and, as so construed, *held* not infringed.

Appeal from the District Court of the United States for the District of Indiana.

Suit in equity by Frank A. Bone against the Commissioners of Marion County. Decree for defendants dismissing the bill, and complainant appeals. Affirmed.

⟹For other cases see same topic & KEY-NUMBER in all Key-Numbered Digests & Indexes

Digitized by Google

Certiorari granted by Supreme Court, 246 U. S. 660, 38 Sup. Ct. 333, 62 L. Ed. —.

Clarence E. Mehlhope, of Chicago, Ill., and Arthur H. Ewald, of Cincinnati, Ohio, for appellant.

V. H. Lockwood, of Indianapolis, Ind., for appellees.

Before ALSCHULER and EVANS, Circuit Judges, and LANDIS, District Judge.

EVANS, Circuit Judge. Plaintiff sought damages and an injunction to prevent future infringement of patent No. 705,732, issued July 29, 1902, upon application filed April 21, 1899. The bill was dismissed upon a finding of no infringement.

The patent under consideration relates to a retaining wall of the cantilever type, and is described by the patentee as follows:

"My invention relates to improvements in retaining walls for abutments of bridges, seawalls, banks of streams, embankments, cuts, dams, dry docks, and such places as it is desired to retain earth or other matter permanently in place with its face at an angle nearer vertical than it would naturally repose when exposed to the action of the elements or gravity. * * * The said invention consists principally of introducing into masonry of concrete, stone, or brick a framework of steel or iron in such a way that the whole wall is so much strengthened thereby that the volume of the masonry may be greatly reduced, and yet the height, base, and strength against overturning, bulging, or settling will still be ample."

Again he says:

"I am aware that retaining walls have been constructed of concrete and steel, but none to my knowledge (1) have been supported on their own base as mine; (2) nor have any of them entirely inclosed the steel within the concrete; (3) nor have any of them used the weight of the material retained as a force to retain itself."

Claims 1, 3, 5, 16, and 17 are involved in the present suit. Claims 1 and 16, which are typical, read as follows:

"1. The combination, with a retaining wall having a heel, of a metal structure imbedded vertically in said wall and obliquely in said heel, so that the weight of the retained material upon the heel of the metal structure will operate to retain the wall in vertical position."

"16. The combination, with a retaining wall having a heel and a toe at opposite sides thereof, said toe having an independent metal structure imbedded therein, of a metal structure imbedded within said wall and heel, said structure consisting of upright bents at the back part of the vertical wall and continuing down along the upper part of the heel of said wall to the back part thereof, so that the weight of the retained material upon the heel of the metal structure will operate to maintain the wall in a vertical position."

Defendant maintains: (a) That the patent is anticipated by the prior art; (b) if not so anticipated, the claims must be so restricted and construed as to support the finding made by the trial judge that there was no infringement.

The following drawings represent the plaintiff's wall, defendant's wall, and the prior art:

Digitized by Google

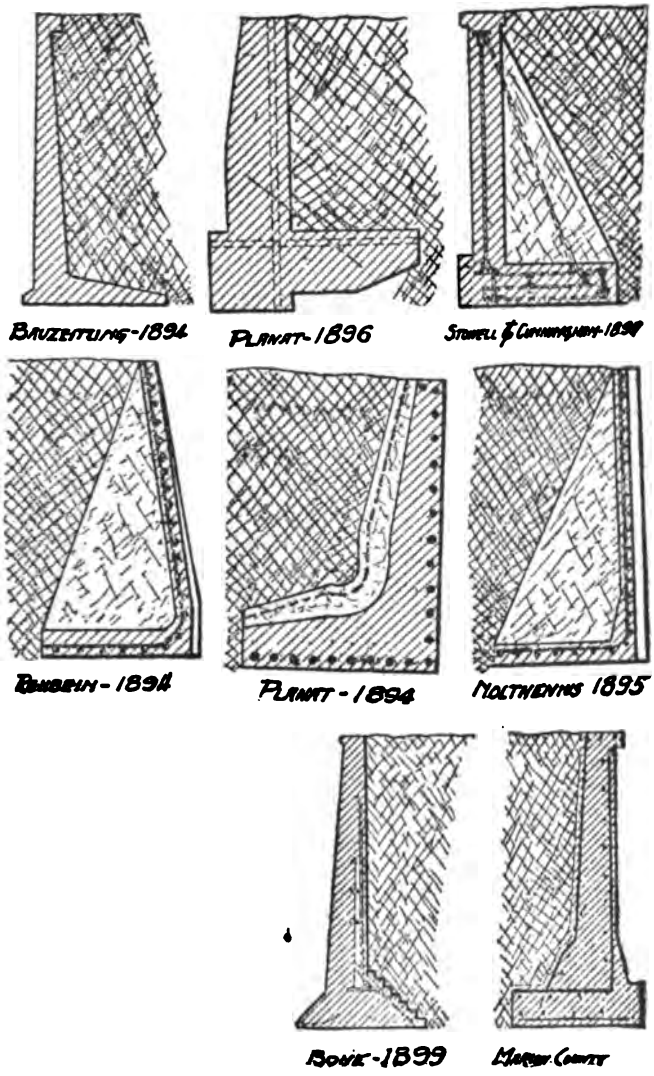

These figures admirably picture the state of the prior art. As early as 1869, a patent was issued to Francois Coignet, No. 88,457, covering the principle of reinforced concrete, which was for the avowed purpose of "giving greater cohesive strength," so that "the walls or size of the articles may be considerably reduced." From that date to the date of the application for a patent by Bone, various retaining walls have been designed and constructed. The Bauzeitung wall, appearing in 1894, was of the cantilever type, with the heel and toe feature found in the Bone patent. Two articles written by Planat appeared in the scientific magazine "La Construction Moderne," a Paris publi-

Digitized by Google

cation, in 1894 and 1896. Both deal with retaining walls of reinforced concrete of the cantilever type. We quote from the article appearing in 1896:

"These computations suppose that one has effectively realized the fixing of the vertical wall to the horizontal slab at their junction. This fixing requires special precautions. The bars at the point of junction exert a pulling force, which tends to pull them out of the concrete. * * * But here we have only a half beam on a cantilever span. It is necessary that the extremities of the bars in the region of fixation should be held in a sufficient mass of concrete or maintained by some other means. One is able to reduce these projections in a very large measure, if one takes care to bind together the vertical bars and the horizontal bars at their point of intersection. In this way the pull of the bar is carried, not only on its prolongation, arranged for anchorage, but also on the bar which is perpendicular to it, and whose great length permits it to offer a large resistance to the force tending to pull it out transversely."

On July 25, 1899, upon application filed March 25, 1897, a patent, No. 629,477, was issued to Stowell & Cunningham, covering a retaining wall illustrated above. Further reference to the prior art seems hardly necessary. Planat, as well as Bauzeitung, and Stowell & Cunningham, each disclosed a wall with a heel in the base, while the toe appears in at least four previous types illustrated by the drawings. It likewise clearly appears that the entire inclosure of steel by the concrete was not original with Bone.

If there be any patentable novelty disclosed by Bone's wall, it is by reason of the location of the reinforcement. In fact, this seemed to be the patentee's own idea of the novelty, for he says:

"The said invention consists *principally* of introducing into masonry of concrete * * * a framework of steel or iron *in such a way that the whole wall* is so much strengthened thereby that the volume of the masonry may be greatly reduced, and yet the * * * strength * * * will still be ample."

It is not necessary to decide whether the location of the reinforcement in the concrete in order to give greater strength in 1899 evidenced patentable novelty when applied to retaining walls, for if the claims in this patent are so restricted and limited, it is obvious that defendant's wall did not infringe in this respect.

Our attention is called to the fact that this patent was sustained in the case of Bone v. City of Akron, 221 Fed. 944, 137 C. C. A. 514. An examination of the decision in that case shows that evidence of the prior art was not introduced; otherwise a different conclusion would have been reached. The court said:

"If the prior art had shown a structure intended for a retaining wall, and having a heel such that the weight of the earth thereon would tend to keep the wall erect, it might be difficult to find invention in merely adding the form of reinforcement most suitable to create the desired tensile strength; but we find no such earlier structures. Those which have that shape are sustaining walls only, and were so obviously unfit for use as retaining walls that no one seems to have seen the utility for that purpose, of which the form, when properly adapted and strengthened, was capable."

The learned District Judge who tried this case in the court below aptly distinguished the facts in the present case from those disclosed in the opinion above quoted. He said:

Digitized by Google

"So the court did not have before it the evidence, either on the petition for rehearing or on the original hearing, that this court has on the state of the prior art." "He [Bone] was not the first person to reinforce a retaining wall; he was not the first person to conceive the idea of reinforced retaining wall which was so shaped and constructed that the weight of the earth on the heel of the wall would withstand the pressure of the dirt or the earth on the wall. He was not the first to do it. * * * Now it may be that, on the record before Judge Day, Bone was the first person to do that. So far as the record in this case is concerned, the absolute converse of that proposition has been demonstrated."

With the claims restricted to a matter of location of the reinforcement (the validity of which we need not decide), there is no infringement.

The decree is affirmed.

(249 Fed. 215)

P & M CO. v. AJAX RAIL ANCHOR CO.

(Circuit Court of Appeals, Seventh Circuit. April 10, 1917. On Petition for Rehearing, March 8, 1918.)

No. 2374.

PATENTS ⟹328—VALIDITY AND INFRINGEMENT—RAIL ANCHOR.

The Kramer patent, No. 1,014,155, for a rail anchor, while not a pioneer patent, and limited in scope, was not anticipated, but represents an advancement in the art, which involved invention; also *held* infringed.

Appeal from the District Court of the United States for the Eastern Division of the Northern District of Illinois.

Suit in equity by the P & M Company against the Ajax Rail Anchor Company. Decree for defendant, and complainant appeals. Reversed.

Edward Rector and Frank Parker Davis, both of Chicago, Ill., for appellant.

Thomas F. Sheridan and Walter A. Scott, both of Chicago, Ill., for appellee.

Before MACK, ALSCHULER, and EVANS, Circuit Judges.

MACK, Circuit Judge. This is an appeal from a decree of the District Court dismissing the complainant's bill for want of equity. The bill charged the infringement of the Kramer patent, No. 1,014,155, which was granted January 9, 1912, upon an application filed October 18, 1911, for a rail anchor. The claims alleged to be infringed by the defendants are claims 1 and 3, which read as follows:

1. In a device of the class described, the combination with a wedge having a base to extend wholly beneath the rail base and a lateral flange to engage one edge of the rail, of a supporting member having flanges to fit over a rib on said wedge and the other edge of the rail, respectively; said parts having co-operating wedging surfaces arranged for gripping the rail vertically and horizontally.

3. In a device of the class described, the combination with a wedge having a rail supporting base having an inclined surface, a flange to engage one end of the rail, a tie abutment, and a tapering rib inclined horizontally, of a supporting member having a co-operating inclined surface, and flanges to engage

⟹For other cases see same topic & KEY-NUMBER in all Key-Numbered Digests & Indexes

Digitized by Google

the other rail edge and said rib respectively, the parts being overlapped whereby when said parts are forced together with a rail between them a gripping force will be applied both vertically and horizontally.

The following drawings, taken from appellant's brief, will make clearer the questions involved.

KRAMER'S CONSTRUCTION.

PATENT IN SUIT.

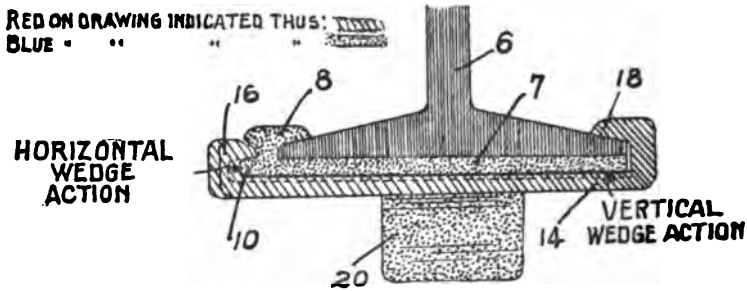

DEFENDANT'S COMMERCIAL FORM.

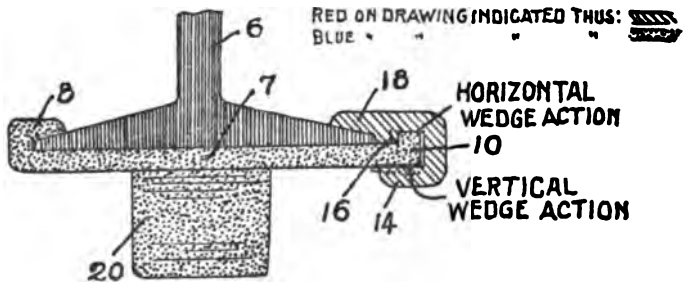

The function and development of the rail anchor art is fully considered in Track Specialties v. Barnett, 242 Fed. 633, 155 C. C. A. 323, decided this day. In most anchors in the prior art, the wedging or gripping action is only in one direction, usually horizontal, though in a few instances vertical. The distinctive feature of the patent in suit and of the defendant's structure is the double wedge action, gripping or squeezing the rail not only horizontally at its edges, but vertically on its upper surfaces. This double wedge action, however, is novel neither with the plaintiff's nor with the defendant's assignor, but is first disclosed in the Porterfield patent, No. 968,797. Kramer's claim to invention, therefore, lies, not in the double grip conception but in his specific mode and means of utilizing it.

Kramer's stated objects were "to produce a simple efficient fastener which is easily applied to the rail, and which will act to grip the rail both at its lateral edges in a horizontal direction, and in a vertical

Digitized by Google

direction, and at the same time maintain an even bearing against the base of the rail," and "to provide a device of the character referred to which will automatically tighten its grip upon the rail as the rail contracts, instead of loosening its grip as in devices of this character heretofore employed."

The patented device consists of the wedge member colored blue, and a co-operating supporting member colored red, in the drawings. The wedge member has a base portion *7*, extending beneath the rail base *6* for the entire width thereof, and is provided with an upwardly and inwardly extending rail engaging flange *8*. Its base portion *7* is inclined longitudinally, so as to afford means of vertical wedging. The extension of this base portion slightly beyond flange *8* and its termination in a rounded rib *10*, which is laterally tapered, make the horizontal gripping possible. The front of the base has a downwardly extending abutment which bears against the tie. The supporting member takes the form of a clamping member or yoke. On one side it has a jaw or flange *18* extending over the opposite edge of the rail from flange *8*. On the other side it has another flange *16*, which is horizontally inclined to coact with rib *10* to produce the horizontal wedge action. Its middle or base portion *14* runs under the wedge member and has an upper surface inclined so as to co-operate with the under surface of the base of the wedge member for vertical wedging action. "In order to assemble the parts of the anticreeper," following the language of the specifications, "the flange *8* of the wedge member is hooked over one side of a rail base and the abutment *20* positioned against the face of tie *21*. The supporting member is then slid in position along the rail with its flange *18* over the opposite edge of the rail base, and until the groove inside the flange *16* passes over the rib *10*, said rib and groove co-operating to draw tightly together the (wedge and supporting) members in a lateral direction and thereby, through flanges *8* and *18*, and wall *17*, gripping the side edges of the rail base between them. By the same operation the relative longitudinal movement of the inclined contacting surfaces on the bases *7* and *14* will effect a vertical wedging action on the edge of the rail base, so that a double wedge is formed, pressing on the edge of the rail and on the bottom of the tie. When the parts have been driven together in position on the rail, any tendency of the rail to 'creep' or move on its bed will tend to increase the tightness of the grip on the rail, and thus effectually prevent its longitudinal movement." An additional vertical wedging action is secured by virtue of the transverse inclination of the coacting surfaces of the base portions of the wedge and supporting members. An automatic adjustment or tightening of the grip upon the rail as it contracts is provided by a locking pin. These two features, however, are immaterial so far as the present infringement suit is concerned.

The defendant's device, which is based upon the Elfborg patents, No. 1,088,976 and 1,083,603, is also composed of two members capable of mutual coaction, whereby the gripping of the rail base both horizontally and vertically is secured. One of the members (that colored blue) has a base portion extending beneath the rail base, the

Digitized by Google

under surface of which portion is longitudinally inclined to afford a wedge whereby the vertical gripping of the rail may be effected; a flange *8* running along the upper side of one edge and engaging the edge of the rail; on the other edge, a rib *10*, extending along the upper surface and horizontally inclined to the axis of the rail; and a depending abutment which bears against the tie. The other member is composed of a flange *18* which hooks over the edge of the rail base opposite the edge engaged by the flange *8*; a base portion which extends transversely beneath the member colored blue just far enough to permit a vertical wedging action to be effected by the coaction of its longitudinally inclined upper surface and the similarly inclined under surface of the base member; and a wedge *16* which fits between the rail base and rib *10*, the outer vertical edge of which tapers laterally engaging the inner vertical edge of rib *10*, so that a horizontal gripping or wedging results as the member colored red is slipped over the other member.

The validity of the patent in suit, unless the claims thereof are very narrowly construed, is attacked on the ground of anticipation, based primarily upon Porterfield, No. 968,797. This is the only earlier double wedge anchor, but in Porterfield both flanges that engage the opposite edges of the rail are on the outer member. The location of one of these flanges *8* and *18* upon each of the anchor members permitting a transverse movement of the flanges relative to each other, not only makes possible a firmer gripping of the rails, but makes the outer member both much better able to resist the downward force exerted against it by the inner member when the abutting foot of the latter is driven against the tie by the creeping action of the rail and less liable to break under this strain. In Porterfield, the inner member, having no flange over an edge of the rail base, derives no direct support therefrom. This very distinction was pointed out by defendant's assignor during the prosecution of Elfborg patent, 1,083,603, in differentiating it from Porterfield. Moreover, in Kramer and in Ajax, the extension of the inner member beneath and in contact with the entire width of the rail base affords a desirable viselike grip not found in Porterfield.

While Wolfe, No. 982,337, locates one flange on each of the two members, neither from his claims nor from his specifications is any double grip conception or action discoverable. And the defendant's assignor successfully argued to this effect in answer to the examiner's reference to Wolfe during the prosecution of the Elfborg patent. To accept the view now urged that one of Wolfe's drawings, being isometric rather than a perspective view, discloses a horizontal wedge, would lead to the absurd conclusion that the rail itself tapers. Wolfe's descriptions and drawings are entirely lacking, in that "substantial representation of the patented improvement in such full, clear, and exact terms as to enable any person, skilled in the art or science to which it pertains, to make, construct, and practice the invention" covered by Kramer; it does not anticipate.

As to infringement, the plaintiff maintains, not only that the basic idea of the patent in suit is found in the Ajax anchor, but that, element

Digitized by Google

for element, claims 1 and 3 can be read upon the latter device. The defendant denies that the several elements of the claims in suit are responded to in any fair sense in its device; it contends that the function of the two members and in the two devices is radically different, and that therefore, even if its device falls within the letter of the claims, it is in spirit and essence so substantially different as to escape the charge of infringement. In the Kramer device, the wedge member acts as the intermediate part or wedge for both the vertical and the horizontal gripping action, while in the Ajax the member colored blue acts as the intermediate part or wedge for the vertical gripping action only, and the wedge *16* of the member colored red, which in Elfborg's specifications is termed the wedge member, performs that function in the horizontal gripping movement.

Many other, though less significant, differences are pointed out by the defendant. These result primarily from the differences just noted, or from modifications in form resorted to in order to save metal, and thus to produce a less costly and more available commercial device. The base of the member colored red of the Ajax is very short, and does not extend transversely beneath the entire length of the base of the other member. In the Kramer construction, flange *8* is caused to grip the rail base by a pushing or compressive force; in the Ajax, it is pulled over the edge of the rail base. The means by which the two members are mutually supported differ somewhat. Part *16* of the Ajax structure is a wedge and not simply, as in Kramer, a flange; Kramer's rib *10* is a wedge or part of a wedge, while defendant's is a flange. But this distinction is of no importance here for, whether a true wedge or not, each of these parts in both devices has a wedging surface and these surfaces in both devices co-operate in like manner to perform the same wedging function. Defendant's contention that the parts of the Ajax numbered *16* and *18* cannot be fairly assimilated to the correspondingly numbered flanges of the patent in suit, is not sustainable; the hook is duplex in form and clearly performs the double function of gripping the rail base and assisting in the horizontal wedging.

It is urged that these differences are vital when, because the advance in the art is gradual, proceeding step by step, each inventor is entitled at best only to the device which embodies his forward step and every inventor is entitled to his own specific structure, as long as it differs from and does not include that of his competitors. Railway Co. v. Sayles, 97 U. S. 554, 556, 24 L. Ed. 1053. Concededly, Kramer is not a pioneer; his invention is narrow and his patent is limited in scope; his is not the first double wedge rail anchor; but while single grip anchors had the two flanges, which engage the opposite edges of the rail base, on separate members, this improvement is not to be found in the prior double grip anchor.

Despite the differences noted, the Ajax anchor, in our judgment, not only responds to the claims in suit, but it embodies the basic conception which was Kramer's contribution to the art. The essence of his invention is a double grip anchor of two members—the one with a rail edge engaging flange, a base extending transversely beneath the

Digitized by Google

rail base for its entire width, and a tapering rib inclined horizontally; the other with a flange engaging the other edge of the rail and a flange engaging the inclined rib, thus affording the means by which the two members are drawn together. The function of his improvement over the prior art was to insure, not simply a firm and secure gripping of the edges of the rail, but a direct and effective support of the inner member on one side of the rail base, so as to enable that member to resist the strain of the downward pressure imposed upon it when its depending tie abutment is forced against the tie by the creeping of the rail.

The fundamental features of the Kramer patent are employed in the Ajax structure in order to secure the same objects. The latter not only responds literally to the Kramer claims, but it operates on the same general principles and is essentially similar in form, so far as form is material to obtain the results sought by Kramer. Transposition of parts without change of operation or function is of no importance. That the Ajax, by decreasing very considerably the amount of metal required without in any way altering the method of operation or the objects to be attained, represents a valuable improvement over Kramer, does not save it from the charge of infringement inasmuch as, despite the changes in form thereby secured, the structure is built upon and embodies Kramer's conception and contribution to the art.

The decree must be reversed, and the cause remanded for further proceedings in accordance with the views herein expressed.

On Petition for Rehearing.

In a petition for rehearing, appellee again emphasizes the Wolfe patent and presents a new theory to demonstrate anticipation of the patent in suit and a new wooden model in support thereof. It is urged that, as the coacting surfaces of flanges A^3 and B^5, whose lengthwise tapering produces the vertical wedge action, also incline upwardly and inwardly conformably to the rail base, the wedge members, after being driven in far enough to grip vertically, on further pressure will move laterally along the rail base, thus producing a horizontal wedging action and averting the destruction of the anchor.

But, as Wolfe states in his specifications, when the wedge-shaped member is driven in so that the two members are firmly wedged together, "then the pin is inserted." In other words, further pressure, with the resulting transverse movement that could produce a horizontal grip, is not contemplated; it is to be avoided. And clearly, neither in his specifications nor in his drawings does Wolfe in any way allude to or disclose the possibility or desirability of such double wedge action. On the contrary, when he speaks of wedge shape or wedge action, he immediately defines it, and limits it to a longitudinal tapering or vertical wedging action. Figure 1 of his drawings, unlike the model offered, shows no clearance between the inner vertical edge of the base A^1 of member A, and the bottom of the inclined shoulder at the middle of the base of member B; as there shown, with the two members fitted on the rail base, any relative movement of them, transversely thereof, is blocked.

Digitized by Google

The successful argument of appellee's present solicitors in distinguishing Wolfe, when cited during the prosecution of the Elfborg patent, is persuasive against their present contentions. Moreover, neither claim 1 nor 3 of the patent in suit responds to the Wolfe patent; claim 3 specifies that each wedging action is produced by a different pair of wedging surfaces; claim 1 requires the base member to extend wholly beneath the rail base. Moore, No. 1,008,183, though later than the patent in suit, was applied for three months earlier. If it were the prior invention, claim 1 would be anticipated. We are satisfied, however, from the evidence, none of which was taken in open court, that priority of invention must be awarded to Kramer.

Sponenberg, No. 1,001,177, is a three, not a two, piece anchor; the wedging effect is differently produced. Moreover, neither he nor Player, No. 974,821, suggests the wedging action here in question. Neither of these patents is referred to in appellee's original brief.

The petition for rehearing will be denied.

(249 Fed. 221)

WEST COAST ROOFING & MFG. CO. et al. v. ELABORATED READY ROOFING CO. et al.

(Circuit Court of Appeals, Seventh Circuit. October 3, 1917. Rehearing Denied December 20, 1917.)

No. 2420.

1. PATENTS ⟹328—VALIDITY—ORNAMENTAL PREPARED ROOFING.

The Becker patents, No. 1,024,549 and No. 1,024,550, for a process for making ornamental prepared roofing and for the product of such process, are void for anticipation by the Bird patent, No. 1,181,827, which was first applied for.

2. PATENTS ⟹91(1)—SUIT FOR INFRINGEMENT—BURDEN AND SUFFICIENCY OF PROOF.

The burden rests on complainant in an infringement suit to prove an allegation that the patentee was the original and first inventor of the thing patented, and where in interference proceedings in the Patent Office, after the patent had been inadvertently issued, priority of invention was awarded to another, whose application was earlier, and to whom a patent was subsequently issued, which decision was affirmed by the Court of Appeals of the District of Columbia, the mere priority in date of the patent in suit is not sufficient to sustain such burden.

3. PATENTS ⟹328—VALIDITY AND INFRINGEMENT—ORNAMENTAL PREPARED ROOFING.

The Becker patents, No. 1,157,664 and No. 1,157,665, for a process for making ornamental prepared roofing and the resulting product, *held* void for lack of invention as to the first patent and claims 2, 3, 4, 6, and 7 of the second. Claims 1, 5, 6, and 8 of the latter *held* not infringed.

4. PATENTS ⟹328—INFRINGEMENT—ORNAMENTAL PREPARED ROOFING.

The Goldberg patent, No. 1,113,116, for a process of making ornamental prepared roofing and the resulting product, *held* not infringed.

Appeal from the District Court of the United States for the Eastern Division of the Northern District of Illinois.

Suit in equity by the Elaborated Ready Roofing Company and Mathias B. Becker against the West Coast Roofing & Manufacturing Com-

---

⟹For other cases see same topic & KEY-NUMBER in all Key-Numbered Digests & Indexes

Digitized by Google

pany and J. H. Hurd. Decree for complainants, and defendants appeal. Reversed.

Suit by the West Coast Roofing & Manufacturing Company and J. H. Hurd against the Elaborated Ready Roofing Company and Mathias B. Becker. Decree for defendants, and complainants appeal. Affirmed.

Charles C. Bulkley, of Chicago, Ill., for appellants.

Rudolph Wm. Lotz and George L. Wilkinson, both of Chicago, Ill., for appellees.

Before KOHLSAAT, ALSCHULER, and EVANS, Circuit Judges.

EVANS, Circuit Judge. Two pending actions were consolidated in the District Court. In the one appellants were plaintiffs, and appellees were defendants; in the other appellants were defendants and appellees were plaintiffs. The District Court sustained all claims of four patents to Mathias H. Becker, the first two being Nos. 1,024,549 and 1,024,550, both granted April 30, 1912, and the other two being Nos. 1,157,664 and 1,157,665, both granted October 26, 1915; found appellants to have infringed each claim of all four patents; enjoined further infringement; and ordered an accounting. In the other suit, appellants' bill, involving the alleged infringement of patent No. 1,113,116, granted October 6, 1914, to S. H. Goldberg, was dismissed for want of equity.

[1] Appellee's first two patents are a process and a product patent pertaining to ornamented prepared roofing, which is also the subject-matter of the last two numbered patents, also a process and a product patent. Appellants' patent No. 1,113,116 is a combined process and product patent, pertaining to "waterproof roofing material." Still another patent to one Charles S. Bird, No. 1,181,827, is of utmost importance.

The dates are significant, though somewhat confusing. The order in which the applications were filed does not correspond with the order in which the patents were granted. Goldberg's application was filed first, July 11, 1910, Bird was second, August 21, 1911, Becker was third, February 1, 1912, for his first two patents, while applications for his second two patents were filed September 4, 1912, and May 3, 1913, respectively. Becker's first two patents were granted April 30, 1912, Goldberg's patent was granted October 6, 1914, and Bird's patent was granted May 2, 1916.

The constantly increasing demand for prepared roofing has spurred manufacturers of this product to produce, not only the most serviceable, but the most attractive, roofing. Prepared roofing of monotonous color and design is acceptable upon many buildings, but for dwellings and buildings of a higher class ornamentation is desirable. To meet this requirement, manufacturers have produced a myriad of designs and products, some of which have marked a distinct advance in the trade and have been the subject of patent grants. As in most products of commercial value, the element of economy in cost of construction has played its important part.

All the patents under consideration pertain to a roofing material

Digitized by Google

which gives a shinglelike appearance to the finished product. After the first two patents to Becker had been granted, the Patent Office discovered that an interference should have been ordered as to Bird's prior and pending application; and it so declared. In this interference proceeding the Patent Office decided in favor of Bird, and Becker appealed to the Court of Appeals of the District of Columbia, where he again lost. Appellees upon the trial of this suit claimed that they were able to prove, by evidence discovered since the above hearing, that Bird was not the first inventor of the product covered by the single claim of the Becker product patent.

All the patents under consideration have for their admitted object the giving of a varicolor shinglelike appearance to the finished product. Becker, Bird, and Goldberg used an asphalt base impregnated and coated with waterproof material, with a surface coat of granular grit or gravel. The particular novelty or asserted improvement consisted of applying to this preparation a coloring material which, viewed from a distance, produced the desired effect. Becker contends that his coloring material, a black asphalt paint, furnished an element supplied neither by Bird nor Goldberg. He claimed the asphalt paint acted as a solvent upon the asphalt base and mingled with it, and as a result the product wore much longer. The Goldberg patent (at least prior to the insertion of claim No. 2) merely called for a waterproof coloring material (ink was at first used) applied to the surface of the roofing material, and it did not become amalgamated with the asphalt base.

Prepared roofing material with an asphalt base was old in the art. The material, as well as the combination for making this waterproof roofing product, had been long known to, and extensively used by, the trade. Ornamentations and color effects, as such, were also old. As early as January 31, 1893, George S. Lee secured a patent, No. 490,668, for roofing material which provided for colored stripes; the specifications stating:

"This surface may be embossed or otherwise finished by painting in ornamental designs, the exterior surface to produce the effect of tiles, shingles, or other roofs. * * *"

A comparison of the language of the patents is instructive. Goldberg's first claim reads:

"The process of preparing ornamental roofing, consisting in coating the surface of a flexible absorbent material with a hot bituminous binder, while said binder is heated applying a layer of granular material, and before said binder is cool applying a layer of paint in designs."

In his description he says:

"The nature of the facing is such that it can be more accurately and effectively tinted or colored while in a heated condition, and the tinting or coloring matter also more effectively unites and mixes with the asphaltic solution with which the facing is mixed. * * * The coated web is then run through suitable pressing rolls. While still in its heated condition the web of roofing is run through a pair of rollers, one of which is provided with tinting or printing forms. The paint or tint applying form is provided with raised designs. The construction is such that the various designs are applied to the facing of the roofing symetrically and accurately and while the roofing is still in its heated condition."

Digitized by Google

Becker in his description says:

"This invention relates to improvements in what is known as prepared roofing, and has for its object to provide material of this character having on its exposed side a design in different colors in imitation of a shingle or tile roof. * * * This coating is of such a character as to cut into the asphaltum coating of the wool felt by partially dissolving the same, so that the second coating will become amalgamated with the first."

His claim reads as follows:

"Prepared roofing, comprising a sheet of fibrous material, impregnated and coated with a waterproof material, said coating being varied in thickness in various fields, a coating of granular grit, partially imbedded in said coating in the fields of least thickness, and a similar coating completely imbedded in the fields of greater thickness."

While Goldberg first made application for a patent, we conclude that with claim No. 2 eliminated (later herein discussed) he did not anticipate Becker's patent. The latter's use of an asphaltum paint or other coloring material, which acted as a solvent upon the asphalt base, was not anticipated by the application "of a layer of paint in designs," as described in claim 1 of Goldberg's patent. Evidence of actual practice by Goldberg strongly supports this conclusion. Instead of a solvent being actually used, appellant, though a manufacturer of asphalt paint, used ink for his coloring material, until after appellee's product was placed on the market.

But Bird's patent, the application for which was filed before Becker's application, was not so restricted. In his description Bird says:

"The object of the invention is so to construct building materials and particularly roofing paper having a layer of asphaltic or similar waterproof material provided with a coating of comparatively fine mineral particles that said surface may, in appearance, simulate a series of slates, and, in addition, to more securely fix certain areas of said particles in place. * * * In carrying this invention into practice it has been my main object to produce building material and particularly building paper having a more ornamental appearance than that heretofore constructed. * * *"

After describing the usual method of making the roofing material and efforts to relieve the monotony in appearance of such a production, he says:

"I now take fluid or semifluid material substantially of the nature of the material of the layer *6* and of a color contrasting with the general color effect of the combined particles *7*, *7*, and apply such material in areas, lines, or stripes *8*, *8*, of comparative thickness, in any predetermined pattern to the surface formed by the particles *7*, *7*, whereby said material of the areas *8*, *8*, forms a binder for the particles *7*, *7*, which it covers and, to some extent, unites with, the layer *6*, while the contrasting color of such material *8*, *8*, forms a design or pattern on the outer surface of the strip by covering certain of said particles, groups or areas of said particles."

The figures *6*, *6*, refer to the asphaltum base, and the figures *7*, *7*, to the gravel, and *8*, *8*, is the paint or coloring material. Since novelty in the Becker patent is dependent upon this factor here described as *8*, *8*, Bird's further description is most significant. He says:

"While I prefer to make use of asphaltic material for layer *6*, and for the overlay *8*, *8*, I do not limit myself to the use of such material. The particles *7*, *7*, may be grains of sand, soapstone, or any other natural or artificial particles adapted for the purpose herein described."

Digitized by Google

He then concludes:

"I prefer to apply the material forming the overlay pattern 8, 8, in such a manner, *of such consistency* and condition that it will be readily received between the particles 7, 7, *and to some extent will unite with material of the layer 6.*"

His claim 5 is as follows:

"Building material of the nature described comprising a base having an asphaltic layer furnished with a coating of fine mineral particles, and an overlay pattern of comparatively thick plastic material in which certain areas of said particles are embedded and covered, substantially as described."

Appellee's attorney describes the novel element in the Becker discovery as follows:

"The liquid is then applied upon the grit surface of the roofing, * * * to produce a design thereon in any desired configuration. The liquid thus applied completely envelopes and covers the grit particles and flows through the interstices between the same into contact with the asphaltic coating of the web, which it attacks and dissolves, so that, when dry, the asphaltum of the liquid is homogeneous and amalgamated with the said coating, which holds the grit particles in place."

The excerpt is significant as an admission. Briefly it might be said that novelty in Becker's patent lay in the use of the asphaltum paint because of its color effect, *combined with* the effect produced on the asphalt base tending to greater endurance. The distinguishing fact being thus emphasized, and we believe, accurately stated, the conclusion necessarily follows that the Bird patent anticipated Becker's patents. Becker's product and process patents, Nos. 1,024,549 and 1,024,-550, must be declared invalid, unless Bird was not in fact the first inventor.

[2] The facts in reference to the issue of priority of discovery between Becker and Bird are unusual. After meeting defeat in the Patent Office and in the Court of Appeals for the District of Columbia, the controversy between these two patentees (Becker and Bird) was renewed in the United States District Court for the Western District of New York, where it was undisposed of at the time this decree was entered. Appellees in that equitable action, brought under section 4918 R. S. (section 9463, Comp. Stat. 1916), assert that Becker was the first inventor of the subject-matter covered by Becker's patent, and that they have discovered new and persuasive evidence bearing upon this issue since the disposition of this controversy by the Court of Appeals of the District of Columbia. At the time of the trial of this suit, this "new and persuasive" evidence had not been submitted in the pending suit in New York, nor was any such evidence offered on the trial in the District Court in this suit.

But it is contended that until this equitable suit, brought under section 4918, in the United States District Court, is disposed of, we are required to give full force and effect to Becker's patent. We think otherwise. Appellees' right to recover must rest upon the strength of their own claim, and not on the weakness of the opponent's position. Both Bird and Becker could not have been "the first, original, and sole inventor of the subject-matter," covered by the common claim.

Digitized by Google

Bird's application antedated Becker's and in the interference proceedings both the Commissioner of Patents and the Court of Appeals for the District of Columbia decided Bird's discovery antedated Becker's discovery. It follows, therefore, that notwithstanding Becker's patent was first issued (through inadvertence of the Patent Office), Bird's subsequently issued patent was a full anticipation of Becker's discovery.

We then have a situation where the record fails to show any evidence tending to defeat or impair the effect of the adjudication of the Commissioner of Patents, affirmed by the Court of Appeals for the District of Columbia. Appellees are required to substantiate the allegations set forth in their bill, the first and material one of which was that they "were the first, original, and sole inventor of a certain new and useful improvement in the method of ornamenting and preparing roofing," described in the patent, and, having failed to sustain this material allegation, the suit must be dismissed. Of course, if appellees can prevail in their pending suit against Bird, brought under section 4918, R. S., a different situation will be presented. We are, however, required to determine this suit upon the evidence before us.

[3] Becker's two later patents deal with an improvement on the prior patents just considered. They are both dependent upon the use of sand or similar material upon the asphalt paint. In the later patents, patentee describes the manufacture of the prepared roofing, and closes the description in the following language:

> "This is accomplished preferably in the manner and by the means fully described in letters patent Nos. 1,024,549 and 1,024,550, issued to me on April 30, 1912."

He further said:

> "The particles (*F*) afford a protective coating for the pattern material and serve also to prevent the latter from adhering to the coat (*C*) when the roofing is rolled up for shipment."

In the process patent, issued on the same day, patentee says:

> "The primary object of the invention is to provide means whereby such flow of the liquid after application to the roofing is prevented. To this end the present invention consists principally in thickening the liquid after application on the surface of the roof to prevent flow thereof, and thus to produce a well and sharply defined configuration on the roof."

Upon the oral argument, in support of these last two patents, appellees contended that the application of sand upon the asphalt paint resulted in ridges being formed, which in turn acted as a check to the flow of the water over the roof, and thus prevented the snow and ice from carrying off the grit. The testimony in the case, however, supports the conclusion here reached that these so-called dams or ridges were barren of practical value in the respects above asserted.

We deem an extended discussion of these patents unnecessary. In our opinion, the application of sand upon paint to prevent its spreading is not patentable invention. If doubt otherwise remained, it would disappear by reason of the issuance of patent No. 278,722 to Henry M. Miner, granted June 5, 1883, and covering "roofing fabric." In this patent the patentee says:

Digitized by Google

"The layer of sand is sufficient to act as a dryer and to cover the whole upper surface of the paper, so that the tar is not exposed at all, thus rendering the fabric easy to handle and preventing the liability of it sticking or adhering to other objects."

In view of this conclusion, it is unnecessary to consider appellants' further claim that they do not infringe either of these two patents.

In the consideration of all four patents to Becker, no claim has been made that, under the circumstances disclosed by the evidence, the process patents could stand in case the product patents were declared invalid. No separate consideration of the process patents is therefore necessary. It appears, moreover that numerous claims of the second process patent, particularly 1, 5, 6, and 8, are not infringed.

We conclude patent No. 1,157,664 is invalid, and claims 2, 3, 4, 6, and 7 of patent No. 1,157,665 are invalid, while claims 1, 5, 6, and 8 of said last-named patent are not infringed, and their validity is not decided.

[4] Appellants contend, in reference to the suit wherein they were plaintiffs in the court below, that the Goldberg patent, No. 1,113,116, contains two valid claims, which were infringed by appellees. As pointed out in the fore part of this opinion, claim No. 1 of this patent was not an anticipation of the first Becker product patent, and appellees did not infringe this claim. Claim 2 of the Goldberg patent reads:

"As a new article of manufacture, a flexible strip of roofing material, comprising a foundation of pliable absorbent fabric, a bituminous waterproof binder associated with the face of the fabric, a facing of granular material adhesively secured in place in the binder and having portions projecting above the surface thereof, and a waterproof coloring material applied *to a plurality of fields* or areas of the facing, contrasting with the interposed spaces and forming designs, said coloring material being *intimately associated* with the binder and *forming a covering* and an intimate union with the *surfaces* to which it is applied."

The italicized words render the construction of the claim difficult. Did the claimant refer to the asphaltum base or to the gravel thereon? Was patentee referring to the same material when he used the words "intimately associated" as when he used the words "forming a covering"? Would not the whole paragraph be more consistent and intelligent, if the words "forming a covering," appearing therein, limited and modified the words "being intimately associated with," appearing just above?

In view of the fact that the Bird application was then pending and the Becker patent had been recently granted, it is the most fair construction of the language of this claim to so restrict it as to exclude the product described in either Bird's or Becker's patent. This claim No. 2, as originally filed, never contemplated the use of a paint such as asphalt paint or any other coloring material that would act as a solvent for the asphaltum base. The file wrapper disclosed many modifications and amendments to this claim as originally filed. It appeared, clothed as above quoted, only after Becker's patent had been granted.

We conclude that this claim No. 2 of the Goldberg patent does not include a waterproof coloring material which is also a solvent for the asphaltum base. So construed, there was no infringement to be

Digitized by Google

enjoined, and its validity in view of the patent to Bird need not be considered.

The decree of the District Court in the suit wherein appellees are complainants and appellants are defendants, No. 396, is reversed, with directions to dismiss the bill. The decree in the suit wherein appellants are plaintiffs and appellees are defendants (No. 397) is affirmed. Appellants are to recover costs in this court.

(249 Fed. 228)

SCHRAM GLASS MFG. CO. v. HOMER BROOKE GLASS CO.

(Circuit Court of Appeals, Seventh Circuit. January 25, 1918. Rehearing Denied April 5, 1918.)

No. 2435.

1. PATENTS ⚷328—VALIDITY AND INFRINGEMENT.
   The Brooke patent, No. 723,983, for an apparatus for cutting and distributing molten materials, which automatically cuts an uninterrupted flow of molten glass into a mold when the mold is filled, and supports the severed stream until another mold is brought into place, was not anticipated, discloses patentable invention of a highly meritorious character, and is valid; also *held* infringed.

2. PATENTS ⚷157(1)—CONSTRUCTION OF CLAIMS—QUALIFYING CLAUSE.
   A clause at the beginning of the claims of a mechanical patent, stating the purpose of the device, is not to be ignored as not describing any element, but is a modifying clause, to be read upon every element thereafter described.

3. PATENTS ⚷125—VALIDITY—ABANDONMENT OF APPLICATION.
   The failure of an applicant for a patent to prosecute his application within two years after it was filed does not invalidate a patent afterward granted thereon; such allowance being within the jurisdiction given the Commissioner by Rev. St. § 4894 (Comp. St. 1916, § 9438).

Appeal from the District Court of the United States for the Southern Division of the Southern District of Illinois.

Suit in equity by the Homer Brooke Glass Company against the Schram Glass Manufacturing Company. Decree for complainant, and defendant appeals. Affirmed.

Russell Wiles, of Chicago, Ill., for appellant.

Frederick P. Fish and Charles Neave, both of Boston, Mass., for appellee.

Before BAKER, ALSCHULER, and EVANS, Circuit Judges.

EVANS, Circuit Judge. From a decree sustaining patent No. 723,983, granted to Homer Brooke, March 31, 1903, holding appellant had infringed it, and enjoining further infringement, this appeal is taken. The defenses are invalidity and noninfringement.

The patent to Brooke relates to an apparatus for cutting and distributing molten materials, particularly glass, and is of particular value to the manufacturer of fruit jars, bottles, and other similar glass objects used by the public in large quantities, the cost of which constitutes an important factor in their successful manufacture. While

---

⚷For other cases see same topic & KEY-NUMBER in all Key-Numbered Digests & Indexes

Digitized by Google

the art of making glass articles is old, it was, prior to Brooke's device, deficient in a particular, an understanding of which is better obtained by a brief general description of the art to which it relates.

In making articles of molten glass prior to this discovery, a considerable quantity of the molten material was taken from a furnace to a mold by a workman, called a gatherer, who, by the use of a "punty" rod, injected into and twisted around in the molten mass in the furnace, first collected and then transferred it to a position over a mold of predetermined size into which the glass ran from the rod. Another workman stood by, and with shears cut this string or stream of flowing glass when directed. The gatherer then twisted his rod, so as temporarily to prevent glass falling off and until another empty mold was supplied, and then the operation was repeated. Machines for receiving this product, containing molds of predetermined capacity, were in common use, and, not infrequently, easy and ready method of substitution of one mold for another was provided. Some devices for receiving the molten mass in the mold, and for the prompt exchange of the molds, were patented, and at least one must be especially considered—the patent to Steimer, No. 549,404, issued November 5, 1895.

[1] Brooke's contribution to the art consisted in producing an apparatus that would better, more rapidly, and more economically convey the molten mass from the furnace to the mold. Instead of the interrupted flow of glass, and the delayed method of transferring with a punty rod this substance from the large reservoir to the mold, in use prior to this discovery, appellee's device permitted the glass to flow continuously from the furnace, and the severing knives were made to act automatically, and means for supporting the severed stream were provided; the accumulated flow being poured into the opening of the next presented mold. The characteristic claims are as follows:

Claim 1: "An automatic device for cutting or separating an unsupported freely flowing stream of molten material into unformed molten masses, the same comprising a cutting knife and means for moving the same and means for supporting the severed stream of continuously flowing material."

Claim 3: "An automatic device for cutting or separating a flowing stream of molten material into unformed molten masses, the same comprising a cutting knife and the means for moving the same, and means for discharging the said molten masses into suitable receptacles."

Claim 4: "An automatic device for cutting or separating a flowing stream of molten material into unformed molten masses of predetermined quantity, the same comprising a knife and means for moving the same, a plurality of receptacles, and means for discharging the said molten masses into said receptacles."

Claim 5: "An automatic device for cutting or separating a flowing stream of molten material into unformed molten masses, the same comprising a knife and means for moving the same, a plurality of receptacles, *means for discharging the said molten masses into said receptacles*, and means for intermittently moving said receptacles into position to receive cut-off masses."

Claim 6: "An automatic device for cutting or separating a flowing stream of molten material into unformed molten masses, the same comprising a knife and means for moving the same, and means for causing the said cutting device to temporarily support the molten stream."

The device is herewith shown in Fig. 1, the sequence of position of cutting knife and receptacles in the operation of severing the molten glass stream being illustrated.

Digitized by Google

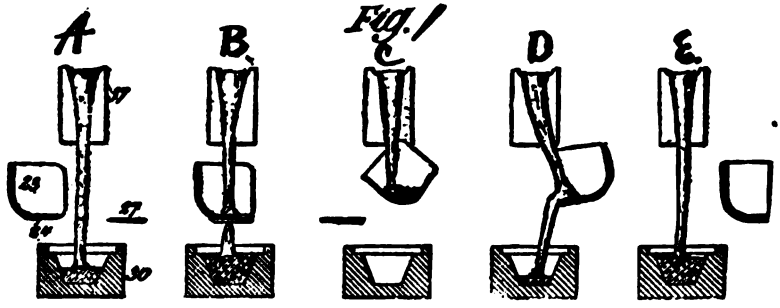

37 is a conduit which aids in conducting the glass from the furnace to the receptacle *30*. The cutting knife *23* is cup-shaped, one side of which is provided with a cutting edge *24*. Another knife which moves in the opposite direction, consists of blade *27*, carried on the end of an arm, extending from the hub (the arm and hub not being shown in the figure), all working automatically. When the constantly flowing stream of glass has filled the mold, the two blades come together as shown in B, the stream is cut, and the knife passes to the position C. While the glass is momentarily supported in the cup-shaped receptacle, as shown in figure C, an empty mold is being brought into position underneath. In D, the tilting operation has been completed and the molten glass has been discharged from the receptacle into the mold underneath. The knife and the cup-shaped receptacle then resume their normal position by the action of gravity. The molten mass proceeds to flow into the mold next succeeding. While this is not all of the machine, it describes the mechanism of its more important parts.

The distinct contribution to the art was so obvious that appellant concedes patentability to Brooke's discovery, but claims that a process and not an apparatus discovery is disclosed. It contends that, an apparatus patent having been issued, it was invalid in view of the prior art, which contention calls for a consideration of the Steimer patent, designated by its patentee as a "glass measuring apparatus," but claimed by the appellant to be capable of being used so as to meet all of the specifications and claims found in the Brooke patent.

Figures 3 and 4 appearing below describe the material part of the Steimer apparatus, which, appellant claims, is capable of performing the same function described in Brooke's patent, and is anticipatory of the claims therein set forth.

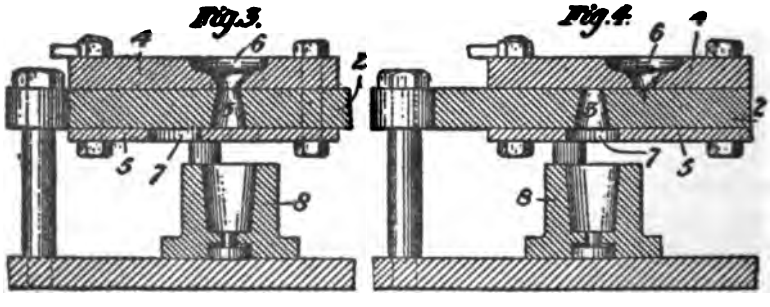

Digitized by Google

We employ language from appellant's brief to describe the Steimer apparatus:

"In the Steimer machine there is a plate *2*, with a central measuring opening *3* precisely like the corresponding opening in defendant's liner machine. In the normal position of the parts shown in Fig. 3, of the Steimer patent a plate *5* lies beneath the hole *3* in the plate *2* and a funnel or cup-shaped opening *6* in an upper plate *4* registers with the opening *3*. Glass is flowed into the measuring receptacle *3* with the parts as shown in Fig. 3. The upper and lower plates are then moved by the operator to sever the glass in the measuring opening *3* from the stream above it, and immediately thereafter the hole 7 in the lower plate *5* registers with the measuring opening *3*, so that the cut-off mass falls into the mold beneath (Fig. 4). This is precisely what happens in the defendant's liner machine. Now it is quite true that Steimer contemplated completely filling the opening *3*, while defendant does not do so, and it is quite true that Steimer contemplated an intermittent stream from a punty rod instead of the continuous stream; but it is equally true that if a continuous stream were supplied to the Steimer machine, it would do exactly what defendant's liner machine does. *If a continuous stream were fed into the cup-shaped receptacle* 6 *in the upper plate* 4 *of Steimer, it would flow into the measuring receptacle when the parts were in the position shown in Fig. 3, and immediately they move to the position shown in Fig. 4 the stream would be cut off and husbanded on the upper surface of the plate* 2 *precisely as in defendant's liner machine*, and on the return of the parts to the position shown in Fig. 3 the accumulated gob would drop into the measuring opening *3*."

Whether Brooke's apparatus patent is valid, in view of the prior art as disclosed in the Steimer patent, is the chief question for consideration on this appeal. Appellant rests its case on these two propositions: (a) If the prior art disclosed a device of like construction, capable of performing the same function as the patent in suit, even though the inventor had no idea of making use of his apparatus for such a purpose, the patent is anticipated. Carnegie v. Cambria, 185 U. S. 403, 22 Sup. Ct. 698, 46 L. Ed. 968. (b) Steimer's device will do the very things claimed for Brooke's apparatus. In other words, appellant admits that Steimer's "orifice" was for a measuring device, and admits that Steimer had no idea of using a "continuous flowing stream of glass, cutting and temporarily supporting it," but that, because Steimer's machine was capable of being so used, it anticipated Brooke's structure, and the latter's patent cannot be saved by reason of the fact that a process was disclosed which was patentable.

Would Steimer's apparatus do the things which can be done by a device embodying the claims of the Brooke apparatus? The pith of appellant's contention lies in the italicized portion of the foregoing quotation. Unfortunately for appellant, Steimer described the operation of his machine (and we believe the only possible operation) specifically in the specifications to his patent. He said:

"The operation is as follows: The mold *8* to be charged with glass is placed under the plate *2*, beneath the position of the hole *3*, and the plates *4*, *5*, are moved, so as to bring the holes *6*, *3*, into register. The gathering boy then introduces into the hole *6* with his punty enough molten glass to fill the cavity *3*, and by means of the operating lever *6* the plates *4*, *5*, are moved so as to bring the holes *3*, 7, into register and to move the hole *6* away from the hole *3*. The movement of the hole *6* away from register with the hole *3* shears off the glass in hole *3* from the glass on the workman's punty, leaving in the hole *3*, enough glass to fill the same accurately, and the movement of the hole 7 into register with the hole *3* causes the glass to drop from the latter into the mold *8* below."

Digitized by Google

Describing his drawings he said:

"In the drawings, *2* represents a plate having formed there through a measuring cavity *3*, downwardly flaring in form. *4* and *5* are two plates, mounted, respectively, on the top and bottom of the plate *2*, and connected so that they may be moved simultaneously back and forth in contact with the plate *2*. The top plate is formed with a hole *6* and the bottom plate with a hole *7*, said holes being situate so that they shall register with the hole *3* at respectively opposite ends of the travel of the plates *4* and *5*—i. e., when the hole *6* is in register with the hole *3*, Fig. *3*, the hole *7* shall be out of register, and that when the holes *7* and *3* are in register the hole *6* shall be out of register, Fig. 4. The hole *3* is made of proper size to contain the amount of glass required to be delivered to the mold."

This construction renders impossible the operation described by appellant in case a continuous stream were fed into the cup-shaped receptacle *6*. The cup-shaped receptacle *6* is not stationary, and the successful operation of this glass measuring apparatus is made to depend upon the movability of plates *4* and *5*. Under such a structure a continuous stream could be fed into the cup-shaped receptacle *6* only in case the stream itself moved similarly to plate *4*, and even then it is doubtful whether the stream of molten glass would follow the movement of the receptacle *6* so as to prevent any portion of the glass falling on the surface of plate *4*, instead of in the receptacle *6*.

Appellant's expert witnesses have suggested, by drawing and otherwise, that the opening *6* in plate *4* might be so enlarged that, notwithstanding the movement of this plate *4*, a portion of the opening *6* would be always under the continuously flowing stream. The suggestion comes as a result of the Brooke patent. The structure shown in Figs. 3 and 4 does not warrant any such suggestion. Referring to such drawings it will be observed that the opening *3* is under the flowing stream. When the opening *6* is moved to position shown in Fig. 4, the stream of molten material, if uninterrupted, would fall, not in opening *6*, but upon the plate *4*. Neither the drawings nor the method of operation described in the specifications of the Steimer patent, permit of, or suggest, a use of the opening *6* in plate *4* for receiving "an unsupported freely flowing stream of molten material."

We conclude the Steimer apparatus is not capable of being so used as to take care of a continuously flowing stream.

[2] It is further contended that Brooke's discovery, if patentable, was not covered by the claims in question. To reach this conclusion appellant asks us to ignore the first clause of the claim, which is as follows:

"An automatic device for cutting or separating an unsupported freely flowing stream of molten material into unformed molten mass."

Appellant contends that this is a mere statement of a process, and has no place in a mechanical apparatus, and should be entirely disregarded when appearing in a claim of an apparatus patent. With this conclusion we cannot agree. While it is true that this clause of itself does not describe an element in the combination, it should not for that reason be ignored. Each of the elements of the combination should be read in the light of this clause and should be modified by it. Such a clause of itself may entirely fail to supply a necessary element in a combination (American Envelope Co. v. A. W. P. Co., 152 U. S.

Digitized by Google

425, 14 Sup. Ct. 627, 38 L. Ed. 500) yet it may so affect the enumerated elements as to give life and meaning and vitality to them, as they appear in the combination. So, in this case, the legitimate and fair construction of the claims, particularly in view of the specifications and drawings, requires us to read on each element of this claim the clause which appellant insists is a superfluity. In so doing we are not substituting an operation for an element, nor including as an element the particular article upon which the apparatus is to work. We are merely giving to the modifying clause the same effect that would be given to an adjective or adverb that limits, enlarges, or qualifies the word it modifies.

Whether Brooke, at the time he made his discovery, was not also entitled to a process patent, we need not consider, for it is not before us. Nor are we required to devote time to the question of the patentability of Brooke's discovery, for in appellant's brief we find the following language:

"This use of the knife blades for the dual purpose of severing the stream and husbanding it while the molds are changed was new with Brooke, or at least Brooke increased the husbanding to a very material extent; that is, from the slight husbanding of Picard, Schulze-Berge, to a substantial amount—great enough to absorb all glass flowing during the relatively long period of mold shift."

Such a concession (justified by the record) clearly and justly credits to Brooke the discovery of an apparatus that would take care of "an unsupported freely flowing stream of molten material," which is the essence of the value of this discovery.

[3] Appellant further urges that the application for a patent was abandoned in the Patent Office, and this contention is based on plaintiff's failure to prosecute his application within the period fixed in the statute. This contention must be rejected in view of the decision in Western Glass Co. v. Schmertz Glass Co., 185 Fed. 791, 109 C. C. A. 1. Appellant cites Steward v. American Lava Co., 215 U. S. 162, 30 Sup. Ct. 46, 54 L. Ed. 139, to the contrary, but the cases are distinguishable and are not in conflict. Section 4892, R. S. (section 9436, Comp. Stat. 1916), under consideration in Steward v. American Lava Co., supra, requires an amended application for the patent to be verified, and makes no exception, and grants to the Commissioner no discretion. The Commissioner of Patents in the present case was not outside of his jurisdiction when he acted on appellee's application, filed more than two years prior thereto, for section 4894, R. S. (section 9438, Comp. Stat. 1916), expressly reserves to the commissioner the right to issue patents after such period.

Claims 3, 4, and 5 are especially attacked, because no basis for them is disclosed in the specifications or drawings. It would serve no useful purpose to reproduce here the drawings or to quote at length from the specifications. We have carefully read the specifications and examined the drawings with the criticism in mind, and find ample support for the claims in both the drawings and specifications.

Appellant's device so clearly infringes appellee's patent that no discussion of this phase of the case will be indulged in.

The decree is affirmed.

Digitized by Google

(249 Fed. 234)

AMERICAN VALVE & METER CO. et al. v. FAIRBANKS, MORSE & CO. et al.

(Circuit Court of Appeals, Seventh Circuit. August 10, 1917. Rehearing Denied December 18, 1917.)

No. 2423.

1. PATENTS ⟹328—VALIDITY AND INFRINGEMENT—RAILWAY WATER COLUMN. The Johnson patent, No. 818,968, for a railway water column, was not anticipated, and discloses invention of a meritorious character. Claims 1, 21, and 38 also *held* infringed.
2. PATENTS ⟹328—VALIDITY AND INFRINGEMENT—RAILWAY WATER COLUMN. The Foster patent, No. 798,406, for a railway water column, while for an improvement only on that of Johnson, first applied for, discloses patentable invention; also *held* infringed.

Appeal from the District Court of the United States for the Eastern Division of the Northern District of Illinois.

Suit in equity by the American Valve & Meter Company and Edward E. Johnson against Fairbanks, Morse & Co. and the Sheffield Car Company. Decree for defendants, and complainants appeal. Reversed.

Appellants failed in their suit to enjoin the alleged infringement of claims 1, 11, 21, and 38 of patent No. 818,968, issued April 24, 1906, to Johnson, and claim 1 of patent No. 798,406, issued August 29, 1905, to Foster, both for improvements in railway water columns.

Johnson's general statement of his invention to obviate defects in prior water columns, and the claims in suit, read as follows:

"This invention relates to improvements in railway water columns or devices of that class which are more particularly intended for supplying water to locomotive tenders and which comprise a stand pipe located alongside of a railway track, or between two such tracks, and a laterally extended spout on the standpipe to be turned either at right angles to the tracks to supply water to locomotive tenders or parallel to the track to avoid the passing trains when not in use, and also adapted to be swung vertically throughout a considerable range of movement for the purpose of bringing the mouth of the spout into immediate proximity to the tank openings of tenders of various heights and of avoiding the coal which is piled on the tenders above the water tank.

"The present improvements have relation particularly to the most desirable type of this class of apparatus—namely, the type in which the spout is pivoted to the standpipe at a point below the end thereof and telescopes at its inner end loosely over the downward turned end or nozzle portion of the standpipe.

"One of the defects of railway water columns of this kind, as heretofore constructed, has been that the end of the spout in moving downwardly swings to one side of a vertical line of descent to such an extent as to carry it laterally beyond the tank opening or water hole of the tender, either at the upper or lower, or at both, limits of its movement; and a principal object of the present invention is to avoid this difficulty by mounting the spout in such manner that the arc of movement described by the end of the spout, even when the range of movement provided is unusually great—six feet, or more—will so closely approach a direct vertical line as to keep the spout at all times in proximity to the tank opening, whatever the height of the tender.

"A further object of the invention is to provide water courses free from obstruction and abrupt changes of direction, and a spout draining quickly away from the standpipe, and not liable to be inoperative from freezing."

"1. A water column, comprising a standpipe terminating at its upper end in a nozzle, a spout swinging loosely over the nozzle and draining away from the standpipe, and a support for the spout pivoted to the standpipe, at a point

⟹For other cases see same topic & KEY-NUMBER in all Key-Numbered Digests & Indexes

Digitized by Google

approximately opposite the middle point of the arc, the delivery end of the spout is usually required to describe in being adjusted to tanks of the average height and below the uppermost level of the outlet of the spout, substantially as described."

"11. A water column, comprising a standpipe, terminating at its upper end in a reversely curved gooseneck, as shown, a swinging spout fitting loosely over the nozzle of the gooseneck and a support for the spout pivoted to the standpipe, substantially as described."

"21. In a water column, of the character described, the combination with a standpipe having an extended discharge nozzle secured at the head thereof, a discharge pipe whose inner end telescopes with said discharge nozzle so as to be moved freely thereon, and which inclines downwardly away from said nozzle in all its positions, a connection uniting said discharge pipe with the standpipe of the water column and pivoted to said standpipe in a horizontal plane below the horizontal plane of the outlet of the discharge pipe when in its fully elevated position at a point approximately opposite the middle point of the arc the delivery end of the spout is usually required to describe in being adjusted to tanks of the average height, and means for counterbalancing the discharge pipe, whereby the range of movement of said outlet is in a substantially vertical plane."

"38. In a water column, of the character described, the combination with a standpipe of an extended discharge nozzle secured at the head thereof, a discharge pipe whose inner end telescopes with said discharge nozzle so as to be moved freely thereon, a connection uniting said discharge pipe with the standpipe of the water column and pivoted to said standpipe in a horizontal plane below the horizontal plane of the outlet of the discharge pipe when in its fully elevated position, and means for counterbalancing the discharge pipe, whereby the range of movement of said outlet is in a substantially vertical plane."

Figure 1 of Johnson is a general illustration of the features here involved:

FIG. 1.

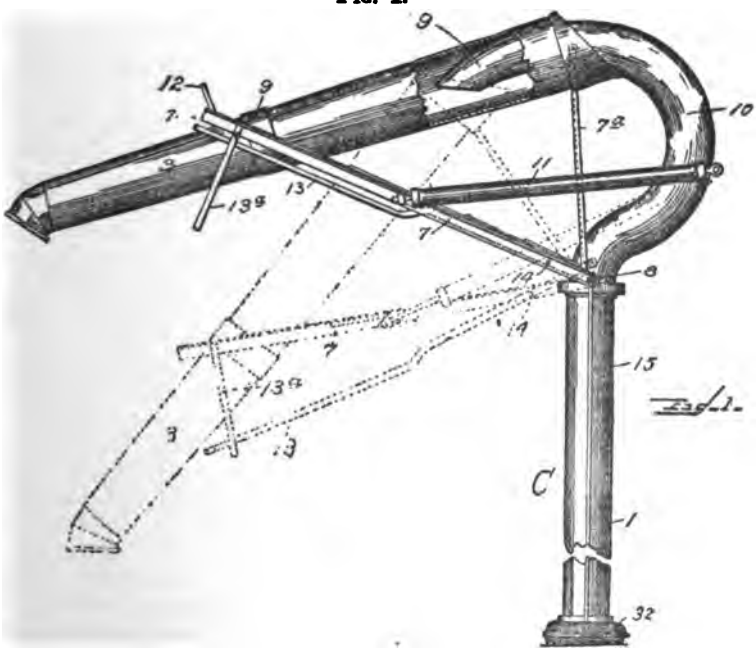

Digitized by Google

Foster's patent was issued ahead of Johnson's, but Johnson's application was filed more than a year before Foster's. And proceedings in the Patent Office on the copending applications were such that Foster's patent must stand or fall as an improvement of Johnson's device only in the means by which the loose spout is carried and swung.

Foster's claim is this:

1. "In a water column of the character described, the combination of a revolubie standpipe, an extended discharge nozzle secured at the head thereof, a discharge pipe whose inner end is united loosely and telescopically with said discharge nozzle, so as to be moved freely thereon, a pivoted link connection uniting said discharge pipe near its inner end with the standpipe of the water column, and means for counterbalancing the discharge pipe, whereby said discharge pipe may be raised or lowered always in a vertical plane, no matter at what angle it may occupy to the track, substantially as described."

In Foster's drawing, inserted below, the links *b*, pivoted to each side of the column at *f* and also to each side of the spout at *a*, together with the chain *h* attached to the spout at *l* and the counterweight *F*, constitute the improved means for carrying and swinging the spout.

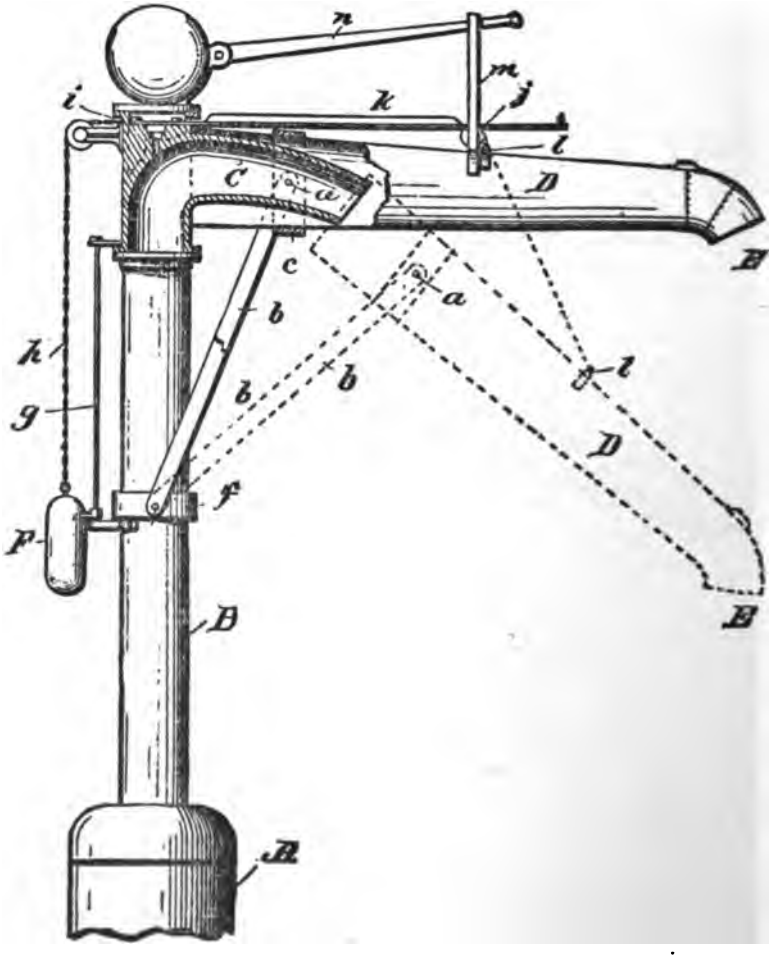

Digitized by Google

In support of the ruling that Johnson's patent is void for lack of invention the strongest reference to the prior art is patent No. 648,346, April 24, 1900, to Poage, for a water column, and a modification thereof in practice.

Poage's Figures 1 and 5 are here reproduced:

FIG. 1.

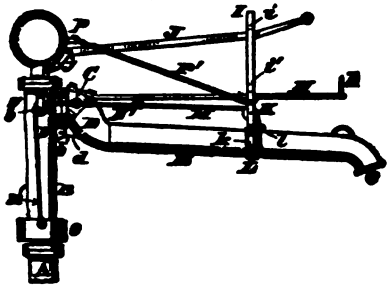

FIG. 5.

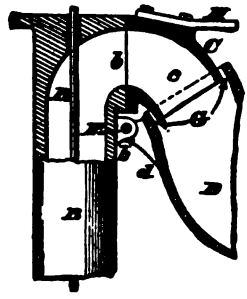

Of the coupling between column and spout Poage says:

"*C* is a downwardly inclined male coupling rigidly fastened to the pipe *B* and having a bore *c* of the same diameter as said outlet *b* and communicating directly therewith. Fitting loosely around the lower end of this male coupling is a female coupling *D* of a discharge spout *E*, having a nozzle *e*. Again, this female coupling has a lug *d*, pivoted to a lug *b'*, projecting laterally from the pipe *B*, the pivot *F* being so located as to afford an annular space *G* between said male and female members."

Frank A. Whiteley, of Minneapolis, Minn., for appellants.

Fred L. Chappell, of Kalamazoo, Mich., for appellees.

Before BAKER, MACK, and ALSCHULER, Circuit Judges.

BAKER, Circuit Judge (after stating the facts as above). In single main track days tenders were supplied with water from tanks at the side of the right of way. A pipe projected horizontally from the tank near the bottom. Over the pipe was hinged a spout which normally stood upright. This spout could be pulled down and a valve operated to discharge water into the hole of a properly placed tender.

When double main tracks became common, inconvenience and delay resulted from taking water from the tank at one side of the tracks; and soon came the "railway water column." In this a water main led to a standpipe or column which was erected between the tracks; from the top of the column, at right angles, extended a rigid discharge spout which normally was parallel to the tracks; and the column could be rotated to swing the spout over either track.

Locomotives were being built larger and larger; on the same railway, tenders of various heights were in contemporaneous use; and for some years before Johnson devised his water column the variation amounted to five or six feet.

One condition of meeting perfectly the known situation was that the outer end of the spout should be movable up and down in a substantially vertical line above the water holes of tenders of varying heights. Other concurrent conditions were that the spout in its most elevated position should drain, when the valve in the column was

Digitized by Google

shut off, into the water hole of the tender, so as to avoid in winter the formation of ice heaps about the column between the tracks; and that the working relation between the column's nozzle and the discharge spout should be such that during the coldest weather the device would not be put out of commission by freezing.

Efforts, prior to Johnson's were along the following lines: One type had a ball and socket joint between the column nozzle and the spout. By providing a continuous waterway, the spout, inasmuch as its outer end in its normal position was above the head of the column, would drain back into the column. Thus the danger of ice heaps was avoided. But manifestly the outer end of the spout could move only in the arc of the circle of which the spout was the radius; and the overlapping parts of the ball and socket joint would become fast from freezing in very cold weather, putting the apparatus temporarily out of service, or causing it to be broken by forcible attempts at operation. In another form of the continuous waterway species the connection between the column nozzle and the spout was a flexible rubber tube, whose extensible accordion plaits permitted the outer end of the spout to be placed over the holes in tenders of varying height. Though this form prevented ice heaps about the base, the pockets in the plaits detained considerable water which when frozen rendered the device inoperable or caused the tube to be ruptured by impatient hands. In the Poage structure, pictured in the statement, we find that fewer of the difficulties were overcome than in the kinds in which there was a fixed and completely watertight connection between the column nozzle and the spout. Poage's is a modified form of the continuous waterway type. For, though Poage's specification speaks of a "loose" connection between the male and female members, the "annular space *G*" is slight in radial distance and limited in circumferential movement. It seems clear to us that "loosely" was used in the sense that the members were not affixed to each other and not completely watertight as in the ball and socket and accordion plait connections, and not in the sense in which a straight-sided funnel may be held "loosely" about the curved discharge end of a faucet. In operation, the annular space frequently became fast with ice; back pressure caused water to overflow through the annular space and form ice heaps about the base; the stop at bar *H* (Figure 5) prevented the outer end of the spout from being raised to the level of the hinge *F*, which forms the center of the arc described by the outer end of the spout; and all movement of the outer end of the spout was down and away from the vertical plane in the center of the track. In Poage's modified form C, the male and female members were somewhat longer, but the principle of operation remained unchanged.

These prior art structures, in our judgment, emphasized the difficulties rather than indicated the solution. In Johnson's structure the co-operation of two new features is essential. One is the connection between the column nozzle and the spout. He made his nozzle in the form of an extended gooseneck, with a relatively flat downward curve. Over this he placed a spout whose rear portion, straight-lined, was of such diameter as to permit movement of the spout not directed or con-

Digitized by Google

trolled by the gooseneck nozzle. In this connective feature Johnson rejected ball and socket joints and accordion plaits, and likewise departed radically from the concentric and arc-ed movement of Poage's male and female members. The other feature is the extended arm, pivoted at one end to the column at a point approximately opposite the middle point of the range of movement of the end of the spout, and rigidly affixed at the other end to the sides of the spout. (In the prior art structures, from the earliest watertank to the latest water column, the spout itself was virtually the radius of the arc described by the end of the spout.) The first feature provides the capacity, and this second feature furnishes the means, of swinging the end of the spout in a substantially vertical line above the holes of tenders of varying height. This combination, resulting in a structure that substantially met all the difficulties, was novel. Each element, as such, was to be found somewhere or other in the mechanical world. And of course, in the light of the patent, other water columns may be, and for use in this case have been, altered and reconstructed to resemble the Johnson; but even with the aid of hindsight we fail to see in the patent anything other than a meritorious invention.

A large part of the record and briefs is taken up with matters which we have carefully examined, but which, we think, need no more than passing mention.

Appellees' insistence that the "vertical plane" of the claims is one that extends through the column and spout, and not the one that is drawn in the center of the track, results from a misreading of the patent.

Prolonged discussion of numerous photographs and measurements by opposing witnesses is presented concerning the character and dimensions of a water column erected by Johnson at Hayfield, Minn., about a year before he applied for his patent. Appellees' contention is that the Hayfield structure has a limit of accommodation of only a few inches, and not the "six feet or more" specified in the patent. Whether the Hayfield structure was a reduction to practice or an experimental use; whether its range of accommodation was less than that subsequently stated in the application for the patent; whether other water columns, also erected by Johnson prior to his application, as at Oelwein, Iowa, were perfect exemplifications of the patent; and what may be the truth respecting the methods of taking photographs and measurements —are questions we deem irrelevant. For this suit is based, not on Johnson's practices, but on his patent.

It is also claimed that the patent drawings, if scaled, do not exactly accord with the written description and the claims. But drawings are to be taken as illustrative of the idea of the patent, not as working plans. Western Telephone Co. v. American Electric Telephone Co., 131 Fed. 77, 65 C. C. A. 313.

[2] Regarding Foster's patent, appellees present the question of invention as though it would be obvious to a mechanic to change the rigidly attached ends of the Johnson arms into pivoted ends. Of course a mechanic could do that; but, if he did, the obvious result would be the inoperativeness of the Johnson structure. Johnson must have seen that obvious result, and therefore used the more expensive rigid

Digitized by Google

attachment; but neither to Johnson nor to others skilled in the art was it then obvious that all the aims and results of Johnson could be attained in a better way by pivoting the outer ends of the supporting arms. For that better way is impossible unless, as shown by Foster, the arms be pivoted near the inner end of the spout and between that point and the outer end of the spout additional supporting means be provided. After the desirability of the improvement and the means of accomplishing it were first perceived in the creative imagination, it was doubtlessly easy enough for Foster or any mechanic to go to the general art of pulleys, chains, counterweights, and arms or levers pivoted at both ends in various places, and gather the elements of the new combination. Though Foster's improvement is slight compared to Johnson's, we cannot find that the Patent Office was inadvertent in making the grant.

Appellees for a time manufactured and sold the Johnson water column under license. After paying something over $12,000 in royalties, they abrogated the contract. Their present manufacture is substantially the Johnson column, plus the Foster improvement, plus an improvement of their own.

We find the record sufficient to hold both appellees in this jurisdiction.

From an extended examination of the file wrappers we find nothing that detracts from the face value of either patent as issued.

Claim 11 of Johnson should not be included in the decree. Appellants, in response to interrogatories filed with appellees' answer, stated that they would rely at the trial only upon claims 1, 21, and 38. Without other notice, they included claim 11 in their evidence at the trial.

The decree is reversed, with direction to enter a decree for an injunction and an accounting.

(249 Fed. 240)

AMERICAN GOGGLE CO. et al. v. MALCOM.

(Circuit Court of Appeals, Seventh Circuit. January 2, 1918.)

No. 2497.

1. PATENTS ⟹328—VALIDITY AND INFRINGEMENT—EYE SHIELDS.
   In the Malcom patent, No. 1,182,398, for an eye shield of transparent flexible material, having two colors extending horizontally, the darker color above to shade the eyes, claims 5, 6, 7, 8, and 9, which claim the two-color feature broadly, are void for anticipation in the prior art. Claims 1, 2, 3, 4, and 10 *held* valid and infringed.
2. PATENTS ⟹328—VALIDITY AND INFRINGEMENT—EYE SHIELDS.
   In the Rextrew patent, No. 1,123,376, for an eye shield, claim 4, which is for an elastic cord and hook for holding the shades in place, is void for lack of invention. Claims 1, 2, 3, 5, and 6 *held* not infringed.

Appeal from the District Court of the United States for the District of Indiana.

Suit in equity by Robert Malcom against the American Goggle Company, Roy E. Green, and William Zimmerman. Decree for complainant, and defendants appeal. Modified and affirmed.

⟹For other cases see same topic & KEY-NUMBER in all Key-Numbered Digests & Indexes

Digitized by Google

The action was on appellee Malcom's patent, No. 1,182,398, May 9, 1916, and on Rextrew's patent, No. 1,123.376, January 5, 1915, assigned to Malcom, both for improvements in eye shields or goggles. The Malcom patent was applied for September 21, 1914, and the Rextrew patent July 13, 1914. It may be inferred from what little thereon the transcript shows—and both sides seem to take it for granted—that after the grant of the Rextrew patent the Patent Office declared interference between Malcom's claims 5 to 10 and Rextrew's claims 7 to 12, which resulted in priority of invention being awarded to Malcom.

Malcom's shield shows a combination of elements—mostly old. It is of transparent flexible material, such as celluloid or pyrolin, having two colors extending longitudinally, the darker color above to shade the eyes, and so adjusted that the user may, by slightly lowering his head or raising his eyes, place the darker color in the line of vision between him and a bright light he is facing—such as sunlight or the strong light of an approaching automobile. The shield is formed by notching the ends and overlapping them, so as to form side walls which extend forward from the face and at right angles to the front or body portion of the shield, which extends straight across between the most forwardly projecting points of the side walls, and forming a somewhat rigid housing over the eyes, straight across the face. The resiliency of the rim is secured by extending the edge of the transparent material into a rubber tubing forming a rim for the shield conformable to the contour of the wearer's face. Fig. 1, following, of the patent drawings shows the shield:

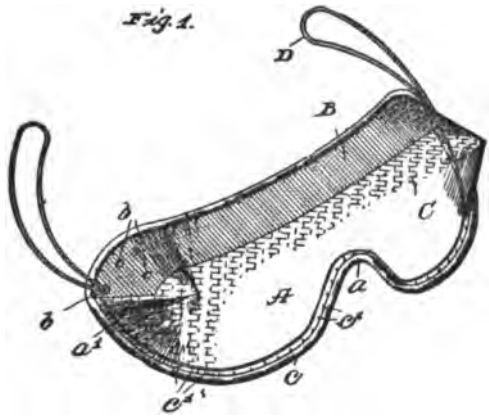

The main body of the shield is thus spaced a considerable distance from the eyes, affording means for ventilation, and, as stated in the specification, space for the user to wear his ordinary glasses, if desired, without interference by the shield.

The main feature of the Rextrew patent different from Malcom is in the forming of the sides or end walls. Instead of notching the ends of the blank transparent sheet, Rextrew folds them together, and thus fastens them so as to produce about the same shaped shield as Malcom's. There are other features which will be stated as they are considered in the opinion.

The usual defenses are made, of anticipation, aggregation, and noninfringement. The decree finds both patents valid, and all the claims infringed.

Henry M. Dowling, of Indianapolis, Ind., for appellants.
Florence King, of Chicago, Ill., for appellee.

Before BAKER, ALSCHULER, and EVANS, Circuit Judges.

ALSCHULER, Circuit Judge (after stating the facts as above). [1] In the prior art appear patent grants which greatly limit the scope of what appellee may rightfully claim. Alt, No. 183,443, 1876, shows the form of ordinary spectacles wherein the lenses or glasses are in part colored or tinted, so that the wearer may by looking through the colored parts protect his eyes from strong lights. Warren, No. 492,125, 1893, shows an eye shade made of transparent mica dyed

Digitized by Google

or coated to a desired shade, laid on a cushioned frame of "felt, rubber, or any suitable material." Alles, No. 950,255, 1910, employs ordinary spectacles suited to the eyes of the wearer, to the glasses of which there is removably attached by holding clips, glass, celluloid, or other transparent material, of darker shade, whereby any desired part of the glasses may be shaded, leaving the rest clear. Barr, No. 1,067,793, 1911, equips ordinary goggle frames, with tinted glass, part of the glass being ground materially thinner than the remaining part, so as to afford clearer vision through the thin than through the thicker portions. Harris, No. 1,060,083, 1913, shows goggles which have eye tubes each with a two-colored lens mounted in a separate revoluble frame in order that they may be set to accommodate them to the direction from which the strong light comes, and thus adjust them to the convenience of the wearer. Sheldon, No. 611,396, 1898, is, barring the two colors, which are not there present, more nearly anticipatory than any of the others. It shows an eye shield of celluloid or other flexible material made from a single piece notched at the ends and the parts brought together, so that the shield when in position will at the ends project somewhat from the face and not interfere with the eyelashes; the rim being composed of flexible material such as cloth or felt.

We thus find in the prior art goggles or eye shields of celluloid or other flexible material, and those with the transparent seeing parts made of two shades of material. While Sheldon does not mention two colors, and it does not appear that he employed more than one color, yet in view of the prior art it would not involve invention in Malcom over Sheldon, and would therefore not be patentable in Malcom, to employ two colors in Sheldon's shield. But we are convinced from the record here that, wholly aside from the two colors, the Sheldon shield is not the shield of the patents in issue, which we find to embody a patentably different concept from that of Sheldon. Sheldon evidently contemplated a shield which at its ends or sides extended somewhat outwardly, but otherwise lay flat against the face; the front of the shield conforming to the face contour. The concept of the Malcom and Rextrew patents appears to be substantially different. They show a sort of outwardly sloping roof extending forwardly from above the eyes, and straight across between the outward points of the side walls; the entire horizontal line across the face at the most forward part of the shield being substantially at right angles with the plane of the side walls. The evidence shows that this conception, when embodied in the commercial structure, found prompt and substantial recognition by the public in the very considerable trade which the new article immediately commanded, a fact which must be accorded due weight in determining whether or not the new article possesses the merit of novelty and involves invention in its conception.

Malcom's claims 1, 2, 3, and 4, viewed in the light of what he shows and of the prior art, secured to him the advance he thus made in the construction of the shield. His claim 5 is predicated simply upon the employment of an eye shield of two colors, extending from end to end of the shield; one of the colors affording greater light obstruction than the other. This claim would give to Malcom any shield which

Digitized by Google

employed the two colors, extending across the front. As has been seen, he is not entitled to claim thus broadly, and claim 5 is therefore void. Claims 6, 7, 8, and 9 fall within the same category as claim 5, and they also are void. Claim 10 describes a structure wherein the darker or greater light-obstructing material is not in the front or seeing part of the shield, but in its side or end walls, whereby the eyes are shaded from light which comes from the sides through the end walls. While from the evidence the utility of such a device is not so plainly apparent as might be desired, it is not controverted, and the prior art shows no structure similar in this respect. The presumptive validity of the claim as granted will therefore prevail.

[2] Respecting the Rextrew patent, claims 7 to 12, having on the interference been awarded to Malcom, need not be further considered. Claim 4 is for elastic loops at the ends of the shield, and a hook at the end of one of the loops adapted to hook upon the other loop, holding the shield in place by the elastic fastening about the head. Flexible eye shields, such as Sheldon's, could not be held to the face by bows, as in ordinary spectacles of rigid construction, nor by springs as in nose glasses, but manifestly only by strings or tape, elastic or otherwise, tied or otherwise held about the head. Whether such fastening member is of one or two pieces, or, if two, whether tied together, or held by a hook, involves expedients altogether too old and common to be in this generation the subject of a patent. Harris, 1913, makes mention of the goggles held in operative relation "through the medium of a band in the usual and well known manner." Warren, 1893, describes an elastic cord about the head to hold the eye shield in place. The claim is clearly invalid. The other claims of this patent are considered in dealing with the question of infringement.

Appellee's claim of novelty in the employment of the rubber rim is clearly overcome by the revelations of the prior art. Genese, No. 295,242, 1884, Mirovitch, No. 807,844, 1905, and Stevens, No. 599,289, 1898, show cushioned rims for goggles. Sheldon describes a rim of felt surrounding his mica shield. We do not find patentable invention in the patents in issue in the employment of the rubber tube for the rim.

It is insisted for appellants that their device is made under the teachings of Rextrew's junior patent, No. 1,186,943, June 13, 1916, assigned to appellant Green, and that it therefore does not infringe. This patent purports to be on its face an improvement on the first named Rextrew patent, the difference claimed to be material to the issues here being the employment in the transparent part of the shield of two pieces of differently colored materials extending longitudinally across the face; the two pieces slightly overlapping and secured together in the various ways described. It seems plain enough that the employment of two pieces of material, instead of one, would not avoid Malcom or the first Rextrew patent. If merit and patentable novelty reside in the employment of two pieces, where Malcom used but one, this would constitute only what Rextrew's last patent claims to be—an improvement on his first. But one may not, in using this improvement, appropriate with impunity the structure upon which

Digitized by Google

it has improved. The alleged infringing articles appear in all essential respects to be like those made in accordance with the patents sued on, and infringe them in the manner pointed out, and are not less infringing because of the feature of the two pieces joined together by cement or in some other manner.

As to the Malcom patent, we conclude that claims 1, 2, 3, and 4 are valid and infringed; claims 5, 6, 7, 8, and 9 are invalid; and claim 10 is valid and infringed, in so far as the evidence shows the end walls of appellants' device to be substantially darker than the rest of the shield.

As to the Rextrew patent in issue, we find that claims 1, 2, and 3, comprising as they do the folded ends to form the side walls, without making any cut or notch in the ends of the blank, are not infringed by appelllants' device, which does not have its ends folded. Claim 4, securing to the patentee the feature of the elastic cord and hook for holding the shades in place, is invalid. Claims 5 and 6 include as an element a hook or pin device for holding the shield to the faces of women by hooking into their hair. No such element is shown in appellants' device, and claims 5 and 6 are thus not infringed. Claims 7 to 12, inclusive, are those which were awarded to Malcom on the interference, and are thus disposed of.

The decree of the District Court will be modified in accordance with these views, and, as modified, affirmed; each side to pay one-half the costs of this court.

Digitized by Google

(249 Fed. 273)

SMITH v. GOVERNMENT OF CANAL ZONE et al.

SAME v. CORRIGAN et al.

(Circuit Court of Appeals, Fifth Circuit. March 20, 1918.)

Nos. 3209, 3150.

1. PROCESS ⟹119—SERVICE—WITNESSES.

Where a litigant came from Panama into the Canal Zone for the sole purpose of being present in court at the hearing of a motion made in a case brought there against him, and to testify in that hearing if an occasion for his doing so arose, such litigant was exempt from service of Canal Zone process while in attendance upon court and during a reasonable time in coming and going, though his attendance was not in obedience to process commanding it.

2. APPEARANCE ⟹9(2)—JURISDICTION—ADMISSION OF.

That defendant's counsel moved to set aside service on the ground that the court was without jurisdiction of the subject-matter of the suit is not an admission of the court's jurisdiction over defendant's person or a consent to the exercise of it.

3. EXTRADITION ⟹19—PERSONS EXTRADITED—EFFECT.

In view of Rev. St. § 5275 (Comp. St. 1916, § 10121), extradition should not be used as a means for obtaining jurisdiction of the person of the accused for civil proceedings, where defendant was extradited from Panama into the Canal Zone on a criminal charge, service on him of an order commanding him to appear and show cause why he should not be attached for contempt, made while he was in jail, held as an extradited prisoner, furnishes no basis for an adjudication in contempt.

4. APPEAL AND ERROR ⟹485(2)—SUPERSEDEAS—CONTEMPT PROCEEDINGS.

Where, under Rev. St. §§ 1000, 1007 (Comp. St. 1916, §§ 1660, 1666), a bond superseding a decree appealed from had been given, the trial court is without jurisdiction to enforce obedience to the decree by contempt proceedings.

5. APPEAL AND ERROR ⟹492—REVIEW—WRIT OF ERROR.

Where, in violation of the stay or supersedeas of a decree from which an appeal had been previously taken, the trial court attempted to enforce it by contempt proceedings, and the record and the parties were before the appellate court, it may set aside the judgment or order in the contempt proceedings as an attempt to enforce a decree suspended, though such judgment or order might not be subject to review on writ of error as attempted.

Appeal from and in Error to the District Court of the United States for the Canal Zone; William H. Jackson, Judge.

Suit by J. A. Corrigan and others against J. Budd Smith. From a decree for complainants, defendant appeals. Reversed, and suit dismissed. Proceeding by the Government of the Canal Zone, on rule of J. A. Corrigan and others, on J. Budd Smith, for contempt. There was a judgment punishing defendant for contempt, and he brings error. Reversed.

Felix E. Porter, of Ancon, C. Z., and Edwin T. Merrick, Philip Gensler, Jr., and Ralph J. Schwarz, all of New Orleans, La., for appellant and plaintiff in error.

Theodore C. Hinckley and Stevens Ganson, both of Panama, R. P., for appellees and defendants in error.

Before PARDEE, WALKER, and BATTS, Circuit Judges.

⟹For other cases see same topic & KEY-NUMBER in all Key-Numbered Digests & Indexes

Digitized by Google

WALKER, Circuit Judge. By an appeal and by a writ of error J. Budd Smith (who will be referred to as the appellant) presents for review two judgments or decrees, one rendered in a suit brought against him by J. A. Corrigan and others (who will be referred to as the appellees), and the other in proceedings following a motion made by the appellees that the appellant be required to show cause why he should not be committed for contempt for an alleged violation by him of a temporary writ of injunction issued in the first-mentioned suit at the time it was brought. If it is to be regarded that there were two cases, instead of one, they are so related as to make it convenient, if not necessary, to consider them together. The following is a summary of so much of what is disclosed as needs to be set out:

The appellant was a citizen of New Jersey and had his domicile there, but for the greater part of the time during several months prior to April 9, 1917, he was a temporary resident of the republic of Panama, being there as the business representative of the Beneficial Loan Society, which had its principal place of business at Newark, N. J., and had business dealings with the Continental Banking & Trust Company; the latter being located and engaged in business in the city of Panama. Early in February, 1917, the Continental Banking & Trust Company was adjudged bankrupt by a Panama court, which appointed a temporary receiver of its property and assets; that court assuming custody and jurisdiction of the bankrupt's estate. The appellant did not at any time live in the Canal Zone, or engage in business or own property there. Some time prior to April 9, 1917, while he was temporarily in the Canal Zone, he was served there with process in a suit brought by one Cornet against him in the district court of the Canal Zone. Some question is made as to the validity of that service, but that question is not a material one in this case. At the request or direction of his counsel in that case the appellant on April 9, 1917, went from Panama into the Canal Zone to be present in the district court to give testimony, if necessary, on the hearing of a motion proposed to be made by his counsel for such an allowance of time for taking depositions as was required to secure the testimony of witnesses living in the United States. While the appellant was in the office of the clerk of the district court, awaiting the convening of the court, the marshal came in and handed to him the summons, complaint, and a restraining order or temporary injunction in a suit brought in the district court on that day by the appellees against him. That suit was brought by the appellees in behalf of themselves and all other creditors and persons interested in the liquidation of the affairs of the Continental Banking & Trust Company who may wish to come in and be parties to the suit, the complaint alleging that the appellees were creditors of that company, and praying the setting aside of described deeds to lands in Panama made to appellant by that company shortly before its bankruptcy, and that the appellant be restrained and enjoined from selling, conveying, or incumbering the lands so deeded to him. The temporary injunction or restraining order mentioned enjoined the appellant from selling,

Digitized by Google

conveying, transferring, or in any wise incumbering the property mentioned in the deeds described in the complaint.

Following the happening of the incident just mentioned the appellant was in the district court room when his counsel made the contemplated motion, but was not examined as a witness, the motion being granted by the court, without the occasion arising for adducing testimony of the appellant. On April 18th the appellant by his attorney filed a motion to dissolve the restraining order. The motion stated that the attorney appeared in appellant's behalf for the purpose of denying the jurisdiction of the court, and the grounds stated raised only the question of the right or jurisdiction of the court to make or enforce the order sought to be dissolved, and submitted no question going to the merits of the suit. On April 30th following the appellant by the same attorney moved the court to set aside the above-mentioned service of the summons, complaint, and restraining order, on the ground that it was made while appellant was attending court in connection with the case of Cornet against him. The introductory words of that motion were:

"Comes now the above-named defendant by Felix E. Porter, his attorney, and, without in any manner waiving the jurisdiction of this court, moves the court," etc.

After hearing evidence on the motions they were overruled on May 10th. The evidence adduced proved the truth of the ground stated in support of the motion to set aside the service. That the court did not find otherwise is shown by the following statement made by the trial judge:

"Mr. Smith came into court on a certain matter in connection with the Cornet case. He came voluntarily, thinking that he might be needed, according to the testimony of his counsel, Mr. Porter, for the purpose of asking for a continuance for the purpose of taking depositions. I cannot say that he was here under any compulsion or restraint or here by reason of his appearing as a party litigant."

On May 21st the same attorney filed an answer for the appellant, the answer expressly stating that the attorney came—

"without in any manner waiving the jurisdiction and the validity of service in this cause, heretofore denied."

On May 23d the court, on motion of appellees, made an order that appellant on May 26th appear and show cause why he should not be attached for contempt for an alleged violation by him of the above-mentioned temporary writ of injunction. On May 26th the marshal returned this order "not served"; the return stating that:

"The defendant J. Budd Smith cannot be located in the Canal Zone."

On May 29th the case against the appellant was called for trial in the district court, and the appellant's attorney then stated that the appellant was a resident of the republic of Panama and moved the court—

"to issue an order of exemption of the said Smith from the service of any process or from arrest while coming to, departing from, or in attendance upon this court for the purpose of the trial herein."

Digitized by Google

This motion was denied, an exception being reserved. What the court did immediately following the action just mentioned is shown by the following statement in its minutes for the same day:

"And on motion of the counsel for the plaintiffs herein the case is set for trial at 2 o'clock this afternoon, whether the defendant is in attendance or not. And the defendant's attorney consents under protest to go to trial without the presence of the defendant Smith."

At the time appointed and without the appellant being present, the trial of the case was entered upon, resulting in the rendition, on May 29th, of a decree perpetuating the preliminary injunction issued when the suit was brought, ordering the appellant to execute to the receiver appointed by the court of Panama in the above-mentioned bankruptcy proceeding conveyances to the lands described in the deeds which the complaint prayed to have annulled, and ordering the appellant to account to such receiver for all rents, issues and profits of the properties described in those deeds. On July 31, 1917, the appeal by appellant from that decree was allowed upon his giving bond, approved on the same day by the judge of the district court, with the condition:

"That if the said J. Budd Smith shall prosecute his said appeal to effect, and shall answer all damages and costs that may be awarded against him, if he fails to make his plea good, then the above obligation to be void; otherwise, to remain in full force and virtue."

On June 21, 1917, J. A. Corrigan, one of the appellees, made an affidavit charging the commission by the appellant of a "misdemeanor of contempt of court as defined and made punishable by the terms and provisions of section 131, paragraph 2, of the Penal Code of the Canal Zone," the affidavit showing that the charge made was based upon appellant's alleged disobedience of the above-mentioned temporary injunction by conveying and transferring to one Wallace, on May 11, 1917, all the property covered by the deeds mentioned in the complaint in that suit. On the same day the court issued its bench warrant for the arrest of the appellant and that he be brought before the district court to answer the charge made by the affidavit. On June 23d this warrant was returned not served. On the same day an alias bench warrant was issued. On the application made to public authorities of the republic of Panama for the extradition of the appellant to answer the above-mentioned criminal charge made against him in the Canal Zone his extradition was ordered by a Panama court. On September 4, 1917, while, as a result of the extradition proceedings, the appellant was in jail at Ancon, Canal Zone, he was for the first time served with a citation to show cause why he should not be attached for the above alleged civil contempt. He was brought before the court on September 7th. His counsel duly made the objections that the court was without jurisdiction to try the appellant on the charge of alleged criminal contempt because the offense charged was a misdemeanor, the exclusive original jurisdiction of which was in the magistrate court, and that the court was without jurisdiction to proceed in the civil contempt case, because the only service on the appellant of the citation therein was made while he was an extradited

Digitized by Google

prisoner in custody of the Canal Zone police, in a Canal Zone jail, under color of extradition from the republic of Panama. The district attorney, who was present, made it known to the court that a trial of the appellant for the criminal offense for which he was extradited was not insisted upon, and suggested that:

"The prosecution of the government case must wait upon your honor's action upon the civil case."

Thereupon the court overruled the objections made to the trial of the civil contempt proceedings, and entered upon a hearing, which resulted in the making on September 12, 1917, of an order which, after setting out findings made by the court, one to the effect that the appellant did, under date of May 11, 1917, transfer and convey to one Theodore Wallace the specific properties that the court's restraining order had directed him not to convey, sell, or incumber, and another that the instrument of transfer showed that the consideration therefor was the sum of $30,050, adjudged the appellant to be guilty of a contempt of the court, and ordered that he—

"be committed to a jail in the division of Balboa, Canal Zone, there to remain charged with said contempt of this court until he pay the said sum of $30,050 into this court for the use of the plaintiffs, and others lawfully entitled thereto, or until released by due process of law, and that a warrant for said commitment issue directed to the marshal of the Canal Zone or to any of his deputies or to any police officer of the Canal Zone to execute."

It was disclosed that the appellant claimed that the attacked deeds to lands in Panama were not made to him for his own use, but for the benefit of the corporation he represented, which, long before the Continental Banking & Trust Company was adjudged bankrupt, had made large loans to that company, which, at the time such loans were made, ineffectually undertook to secure them by depositing with another bank in Panama, for the lender's benefit, the deeds to the borrower conveying the lands which, shortly prior to the bankruptcy, were conveyed by the borrower to the appellant.

[1, 2] That the appellant, unless he had in some way waived or lost that right, was entitled to have set aside the service upon him of process in the suit brought against him by the appellees, made under the circumstances above narrated, is a proposition which the authorities do not leave open to doubt. On the advice of his counsel he came from Panama, where he resided, into the Canal Zone, for the sole purpose of being present in court at the hearing of a motion made in a case brought there against him, and to testify in that hearing if an occasion for his doing so arose. It fairly appears that his counsel anticipated, and not without reason, that, to support the motion proposed to be made, it might be required to adduce testimony which the appellant could give. The appellant as a witness coming from another jurisdiction was exempt from the service of Canal Zone process while in attendance upon court, and during a reasonable time in coming and going, though his attendance on the occasion in question was not in obedience to process commanding it. The reasons supporting the rule stated are sufficiently disclosed in the opinions rendered in the following cases: Stewart v. Ramsay, 242 U. S. 128, 37 Sup.

Digitized by Google

Ct. 44, 61 L. Ed. 192; Feister v. Hulick (D. C.) 228 Fed. 821; Central Ry. Signal Co. v. Jackson (D. C.) 238 Fed. 625; Stratton v. Hughes (D. C.) 211 Fed. 557; Kinne v. Lant (C. C.) 68 Fed. 436.

The case before us aptly illustrates how a nonobservance of the rule may lead to the result of a contested claim being tried in the absence of the party against whom it was made, when possibly that party might reasonably have anticipated being successful in the suit if present in person at the trial of it, but was kept away by the refusal of the court which was to pass on his rights to prevent his attendance subjecting him to more expense and hardship than the loss of the suit would entail. The action taken in the case by appellant's counsel in his behalf before the making of the motion to set aside the service raised only questions as to the court having jurisdiction of the subject-matter of the suit. No decision by the court of any question going to the merits of the suit was sought. The appellant's admission of the court's jurisdiction, or consent to the exercise of it, is not to be inferred or implied from a previous explicit denial of its jurisdiction, though such denial was based upon grounds other than the one stated in the motion to set aside the service of the process. A denial of jurisdiction is not to be given effect as an admission of it. Big Vein Coal Co. v. Read, 229 U. S. 31, 33 Sup. Ct. 694, 57 L. Ed. 1053; Pugh v. Loisel, 219 Fed. 417, 135 C. C. A. 221.

The court erred in overruling the motion to set aside the service of process upon the appellant. It did not acquire jurisdiction of the appellant's person as a result of his counsel, in his absence and under protest, taking part in the subsequent proceedings for the purpose of preventing the rendition of a judgment which the court was without jurisdiction to render. As that judgment must be reversed because of the court's lack of jurisdiction of the person against whom it was rendered, it is not necessary to decide whether, if the process had not been subject to be set aside, the court would have had jurisdiction of the subject-matter of the suit, the object of which was to subject land in Panama, held by a resident of Panama, to the payment of debts, alleged to be owing to the appellees and others by a corporation located in Panama, which, prior to the institution of the suit, had been adjudged bankrupt by a court of Panama, which had assumed control of the bankrupt's estate and was engaged in the administration of it.

[3] The judgment rendered in the contempt proceeding is not sustainable, even if the appellant was subject to be punished for disobeying an order which was never made effective by a valid service of process. The only service upon him of the order commanding him to appear and show cause why he should not be attached for contempt was made while he was in jail, held as an extradited prisoner. It seems that this was not permissible because of the court's lack of right to exercise jurisdiction of the appellant for any purpose other than the one for which he was delivered by the Panama authorities, unless the exercise of jurisdiction is based upon something happening after the extradition. United States v. Rauscher, 119 U. S. 407, 422, 7 Sup. Ct. 234, 30 L. Ed. 425; In re Reinitz (C. C.) 39 Fed. 204, 4 L. R. A. 236; In re Baruch (C. C.) 41 Fed. 472; Collins v.

Digitized by Google

Johnston, 237 U. S. 502, 35 Sup. Ct. 649, 59 L. Ed. 1071; U. S. R. S. § 5275 (Comp. St. 1916, § 10121).

However this may be, certainly a court should not allow itself to be made the instrument of perverting the process of extradition to serve the purposes of a private litigant who was instrumental in having that process resorted to with the object of having the extradited person subjected to a civil liability, instead of being tried for the crime with which he was charged. It is fairly to be inferred from circumstances disclosed that, if the procuring of the extradition was accompanied by a purpose to try the appellant on the criminal charge on which he was extradited, that purpose was a very secondary one and was subordinated to the controlling one of getting the appellant into the Canal Zone, so that civil process for an alleged contempt of court might be served upon him and a hearing on that charge had. It was not until after it had become apparent that service could not be made of the court's order to show cause that one of the appellees, at whose instance that order was procured, made the affidavit which was the beginning of the criminal proceeding against the appellant. That criminal charge was made the means of effecting the appellant's extradition. When, as a result of the extradition, the opportunity was afforded of trying the appellant on that charge, the public official whose duty it was to prosecute it, instead of manifesting a desire to avail himself of that opportunity, actively co-operated with the counsel for the appellees in the effort to have the court give precedence to a civil case brought against the appellant before the criminal proceeding was instituted—service of process in the civil case having been made while appellant was held in custody to answer the criminal charge—and volunteered the suggestion to the court that the criminal case must wait upon the court's action in the civil one. To say the least, there was the appearance of the process of extradition being permitted to be made use of, not for the ostensible public purpose which could justify the resort to it, but to afford to private litigants the opportunity of securing the enforcement against the appellant of an asserted civil liability.

[4] The judgment rendered in the contempt proceeding was, in necessary effect, an attempt to coerce the appellant to do what he was commanded to do by a judgment or decree which had been superseded, and was not then subject to be enforced by the trial court. The bond given and approved on the allowance of the appellant's appeal from the decree rendered on May 29th was made and approved within such time and was so conditioned as to effect a stay or supersedeas of that decree, service of the citation on that appeal having been made on the day the appeal was allowed. R. S. U. S. §§ 1000, 1007 (Comp. St. 1916, §§ 1660, 1666). By the terms of that superseded decree it perpetuated the preliminary injunction issued when the suit was brought, ordered the appellant to convey the lands described in the deeds which the complaint in the case prayed to be annulled, and ordered him to account for all rents, issues and profits of the properties described in those deeds. By the decree rendered in the contempt proceedings there was what amounted to an ascertainment by the court

Digitized by Google

that the sum of $30,050 was what the appellant was chargeable with because of his conveying the lands in question, and what he was required to pay to satisfy the superseded decree, and it was ordered that the appellant be committed to jail, there to remain until he pay the said sum as he was ordered to do. We are of opinion that the court was without power so to coerce obedience to a decree which had ceased to be enforceable by it.

[5] As above indicated, the record before us discloses that at the instance of the appellees the court in the contempt proceedings made an order having the effect of a violation of the stay or supersedeas of a decree previously appealed to this court and undisposed of by it at the time such order was made. Though that order or judgment, considered as one made in an independent suit or proceeding, may not be subject to be reviewed on a writ of error (In re Chetwood, 165 U. S. 443, 462, 17 Sup. Ct. 385, 41 L. Ed. 782), yet, the record and the parties being before us, it is subject to be set aside by this court because of its having the effect of an attempted enforcement of a decree not subject to be enforced by the trial court while the case in which it was rendered was pending in this court on a suspensive appeal. Stockton v. Bishop, 2 How. 74, 11 L. Ed. 184.

In view of conclusions above stated, it is not necessary to pass on the suggestion that if, in the circumstances existing when the contempt proceeding was heard, the appellant had been subject to be punished for a contempt of court, it was only in the criminal case which was not prosecuted. See Gompers v. Bucks Stove & Range Co., 221 U. S. 418, 449, 31 Sup. Ct. 492, 55 L. Ed. 797, 34 L. R. A. (N. S.) 874.

Because of errors pointed out, each of the judgments presented for review is reversed, and the suit and the proceeding in which, respectively, those judgments were rendered are dismissed.

Reversed.

(249 Fed. 280)

CHICAGO & A. R. CO. v. ALLEN.

(Circuit Court of Appeals, Seventh Circuit. November 26, 1917. Rehearing Denied January 22, 1918.)

No. 2535.

1. COURTS ⟹37—JURISDICTION OF FEDERAL COURTS—ACTION UNDER EMPLOYERS' LIABILITY ACT.

   Whether a federal court has jurisdiction of an action by a railroad employé for an injury received in the course of his employment, as one arising under Employers' Liability Act April 22, 1908, c. 149, 35 Stat. 65 (Comp. St. 1916, §§ 8657–8665), depends upon whether the employé at the time of his injury was engaged in interstate transportation, or in work so closely related to it as to be practically a part of it, and this is a question of fact. Jurisdiction cannot be conferred on the court by a stipulation or admission by defendant that plaintiff was so engaged, irrespective of the facts.

2. APPEAL AND ERROR ⟹1178(6)—CIRCUIT COURT OF APPEALS—REVIEW—JURISDICTION.

   A general verdict, returned on trial of an action which was without reversible error, may be permitted to stand pending an inquiry and determination by the trial court on the question of its jurisdiction.

⟹For other cases see same topic & KEY-NUMBER in all Key-Numbered Digests & Indexes

Digitized by Google

In Error to the District Court of the United States for the Eastern Division of the Northern District of Illinois.

Action at law by James Allen against the Chicago & Alton Railroad Company. Judgment for plaintiff, and defendant brings error. Reversed, with directions.

Edward W. Everett, of Chicago, Ill., for plaintiff in error.

George C. Otto, of Chicago, Ill., for defendant in error.

Before BAKER, ALSCHULER, and EVANS, Circuit Judges.

EVANS, Circuit Judge. Plaintiff in error, herein called the defendant, attacks the jurisdiction of the federal court. It asserts that defendant in error, herein called the plaintiff, was not engaged in interstate commerce at the time he received his injury, and, no other ground of federal court jurisdiction appearing, the action should have been dismissed. The facts in respect to the character of plaintiff's employment are disclosed, in part, by a stipulation, which is as follows:

"It is stipulated by and between the parties to the above-entitled cause * * * that prior to and on the 25th day of September, A. D. 1912, and at the time plaintiff claims to have been injured, the defendant owned, was possessed of, and was operating a railroad and railroad shops, railroad cars, locomotive engines, and rolling stock, tools, appliances, machinery, and conveniences, and in connection therewith was during all said time engaged in intrastate and interstate commerce, and that said plaintiff was, at the time he claims to have been injured, in the employ of said defendant, and as such employé at the time he claims to have been injured was engaged in working on or about and repairing an engine which belonged to defendant, which engine prior to the time plaintiff claims to have been injured had for a long time been used by it indiscriminately in both interstate and intrastate commerce, and which engine was at the time plaintiff claims to have been injured intended by said defendant to be used thereafter in interstate and intrastate commerce as occasion might require, and which engine was shortly after the time plaintiff claims to have been injured used by said defendant in both interstate and intrastate commerce."

Defendant also showed that the engine was taken to the shops on the 8th day of July, and was removed on the 28th day of September; that the repairs consisted of a general overhauling of the engine. Defendant offered to show that the engine was hauled from Springfield to Bloomington as a dead engine on July 2, 1912; that it lay in the yards at Bloomington for six days, when it was taken to the shops for general and extended repairs, and remained in the shops until September 28th, when it was ready for use; that prior to June 23, 1912, it had been used in drawing a local passenger train within the state of Illinois and not beyond; that after September 28th, and on October 2d, it was put in use at Taluca drawing a local passenger train, which did not originate in or go beyond the state of Illinois. The court refused to receive such testimony, on the ground that defendant was bound by a letter corroborating a statement made, in open court, prior to the date of the stipulation, the contents of which letter were:

"Pursuant to conversation had before Judge Carpenter recently, we agree that when this case is tried we will admit in open court that Allen, when injured, was engaged in interstate commerce, and that his rights to recover against the defendant and its liabilities to him are controlled exclusively by

Digitized by Google

the federal Employers' Liability Act. In other words, we will make no contention that, when injured, he was engaged in merely intrastate commerce employment."

Plaintiff early sought a bill of discovery, and the statement in open court and the letter referred to came as a result of plaintiff's endeavors to obtain such discovery.

[1] Upon this record, we are confronted by the question: Did the court have jurisdiction of the case? It is elementary that the facts showing the jurisdiction of the federal court must affirmatively appear. The party who attacks the court's jurisdiction is not required to establish the negative. If the record fails to show the necessary jurisdictional facts, the action must be dismissed. It is also elementary that a federal court does not acquire jurisdiction by consent of parties. Nor will a stipulation as to facts, which are not "the facts in the case," control. True, these facts may be established by stipulation, as well as by admissions, or by any other competent testimony. But it is the facts, and not conclusions, upon which jurisdiction must depend.

The offer of the letter written prior to the stipulation was not accepted by the plaintiff, but was rejected by him, with a full appreciation of the applicability of these rules. While we might well conclude that the offer of the letter had no bearing in the present case, because never accepted, and because the agreement of the parties was immediately thereafter merged into the written stipulation, we are also required to reject it, if the record shows the plaintiff was in fact not engaged in interstate commerce at the time he received his injuries. Ignoring the significance of the rejected testimony offered by the defendant, and confining our attention entirely to the stipulation, we find therefrom that defendant was a carrier engaged in interstate commerce, and plaintiff was its employé at the time he received the injury. The controverted issue for determination then is: Does the testimony show plaintiff to have been engaged in interstate commerce at the time he was repairing the engine and was hurt?

The true test of employment in such commerce in the sense intended is: Was the employé at the time of the injury engaged in interstate transportation or in work so closely related to it as to be practically a part of it? Shanks v. Del., L. & W. R. R. Co., 239 U. S. 556, 558, 36 Sup. Ct. 188, 60 L. Ed. 436, L. R. A. 1915C, 797; C., B. & Q. R. R. v. Harrington, 241 U. S. 177, 36 Sup. Ct. 517, 60 L. Ed. 941. What is "interstate transportation or work so closely related to it as to be practically a part of it," has been the subject of inquiry in many cases. See Pederson v. Del., L. & W. R. R., 229 U. S. 146, 33 Sup. Ct. 648, 57 L. Ed. 1125, Ann. Cas. 1914C, 153; Ill. Cent. R. R. v. Behrens, 233 U. S. 473, 34 Sup. Ct. 646, 58 L. Ed. 1051, Ann. Cas. 1914C, 163; Del., L. & W. R. R. v. Yurkonis, 238 U. S. 439, 35 Sup. Ct. 902, 59 L. Ed. 1397; Shanks v. Del., L. & W. R. R. Co., 239 U. S. 556, 36 Sup. Ct. 188, 60 L. Ed. 436, L. R. A. 1916C, 797; Seaboard Air Line Co. v. Koennecke, 239 U. S. 352, 36 Sup. Ct. 126, 60 L. Ed. 324; C., B. & Q. R. R. v. Harrington, 241 U. S. 177, 36 Sup. Ct. 517, 60 L. Ed. 941; L. & N. R. R. Co. v.

Digitized by Google

Parker, 242 U. S. 13, 37 Sup. Ct. 4, 61 L. Ed. 119; Ill. Cent. R. R. v. Peery, 242 U. S. 292, 37 Sup. Ct. 122, 61 L. Ed. 309; Erie R. R. v. Welsh, 242 U. S. 303, 37 Sup. Ct. 116, 61 L. Ed. 319; M. & St. L. R. R. v. Nash, 242 U. S. 619, 37 Sup. Ct. 239, 61 L. Ed. 531; M. & St. L. R. R. v. Winters, 242 U. S. 353, 37 Sup. Ct. 170, 61 L. Ed. 358; N. Y. Cent. R. R. v. White, 243 U. S. 188, 37 Sup. Ct. 247, 61 L. Ed. 667, L. R. A. 1917D, 1, Ann. Cas. 1917D, 629; Raymond v. C., M. & St. P. R. R., 243 U. S. 43, 37 Sup. Ct. 268, 61 L. Ed. 583.

Defendant asserts confidently that the facts in this case are governed by the decision in the case of M. & St. L. R. R. v. Winters, 242 U. S. 353, 37 Sup. Ct. 170, 61 L. Ed. 358; while plaintiff, with equal confidence, relies upon Pedersen v. Del., L. & W. R. R., 229 U. S. 146, 33 Sup. Ct. 648, 57 L. Ed. 1125, Ann. Cas. 1914C, 153. In the case of M. & St. L. R. R. v. Winters, supra, the court said:

"The plaintiff was making repairs upon an engine. This engine 'had been used in the hauling of freight trains over defendant's line, * * * which freight trains hauled both intrastate and interstate commerce, and * * * it was so used after the plaintiff's injury.' The last time before the injury on which the engine was used was on October 18th, when it pulled a freight train into Marshalltown, and it was used again on October 21st, after the accident, to pull a freight train out from the same place. That is all that we have, and is not sufficient to bring the case under the act. This is not like the matter of repairs upon a road permanently devoted to commerce among the states. An engine as such is not permanently devoted to any kind of traffic, and it does not appear that this engine was destined especially to anything more definite than such business as it might be needed for. It was not interrupted in an interstate haul to be repaired and go on. It simply had finished some interstate business and had not yet begun upon any other. Its next work, so far as appears, might be interstate or confined to Iowa, as it should happen. At the moment it was not engaged in either. Its character as an instrument of commerce depended on its employment at the time, not upon remote probabilities or upon accidental later events."

We see no escape from the language of this decision. It clearly fits the case in hand, irrespective of defendant's testimony supplementing the stipulation or defendant's offered but rejected testimony. We are convinced that the necessary jurisdictional facts not only do not appear, but a situation is disclosed showing affirmatively that plaintiff was not engaged in interstate commerce at the time of the injury. The rule may be, and doubtless is, hard to apply in all cases, and unfortunate results attend its misapplication; but we are not permitted to digress therefrom because of that fact. It must be obvious to all who have studied this question that the difficulty lies, not in the rule, but in the facts which in many cases make the solution of the question extremely difficult.

The case of Pedersen v. Del., L. & W. R. R., supra, is distinguished by the language of the foregoing opinion. In that case Pedersen, an ironworker, was employed by the carrier in "alteration and repair" of some of its bridges and tracks in New Jersey, and at the time of the injury was engaged with another employé in carrying, from a tool car to the bridge, some bolts which were to be used that night in repairing the bridge; the repair consisting of removing an existing girder and inserting a new one. While so carrying the bolts or rivets, plaintiff was injured by a passing interstate train. The bridge was

Digitized by Google

used in interstate and intrastate commerce. A bridge, unlike the engine in the instant case, is permanently devoted to interstate traffic, and, while used in connection with intrastate commerce, it does not thereby lose its character as an instrumentality of interstate commerce. An engine might be used as an instrumentality of intrastate commerce, or it might be used as an instrumentality of interstate commerce. The basic difference between the engine and the bridge as instruments of commerce lies in the fact that the bridge at all times is an instrument in interstate commerce, while the engine may not be an instrument of interstate commerce. In fact, we conclude from the record now before us that, at the time plaintiff received his injuries, the engine was not an instrument of interstate commerce.

It should be borne in mind that in all these cases the party claiming the federal court has jurisdiction carries the burden of proving the facts which alone confer jurisdiction. Unless the stipulation affirmatively discloses the existence of these facts, the action must be dismissed. If the testimony received on the trial in this case, supplementing the stipulation, and which showed the engine was taken to the shop for a general overhauling on July 8th, and there remained until September 28th, be considered, the conclusion we draw from the facts appearing in the stipulation is greatly strengthened.

We find nothing in the record to support plaintiff's claim that defendant should be estopped from questioning the court's jurisdiction. The letter and the offer made in open court before the stipulation was signed were rejected by plaintiff, who sought and secured the above-quoted stipulation. Moreover, this court cannot accept any offer, stipulation, or admission made to confer jurisdiction when the real facts dispute the offer, stipulation, or admission. Minnesota v. Northern Securities Co., 194 U. S. 62, 24 Sup. Ct. 598, 48 L. Ed. 870; Thomas v. Board of Trustees, 195 U. S. 207, 25 Sup. Ct. 24, 49 L. Ed. 160; United States Envelope Co. v. Trans. Co. (D. C.) 229 Fed. 579.

Plaintiff contends, however, that the evidence showing the date the engine went to and came from the shops, as well as the nature of the repair work done upon it, came from the lips of a witness who was not qualified to speak, and he further contends that he was misled by the letter and offer, heretofore referred to, and that, if given the opportunity, he will prove that the engine upon which plaintiff was working at the time he received his injuries was an instrument of interstate commerce. Under the circumstances of this case, and particularly in view of the claim, seriously and confidently made, by counsel for plaintiff, that, if given an opportunity to establish the facts necessary to confer jurisdiction upon the court, he will be able to do so, we feel justified in reversing the judgment, with directions to the trial court to permit both parties to offer all the competent evidence they may produce bearing upon this issue.

[2] It does not follow, however, that a new trial upon all issues should be granted. Whether the verdict will stand pending the inquiry by the trial court into the facts bearing upon this issue depends upon the absence of other reversible error on the trial of this case.

Digitized by Google

Grand Trunk Western R. R. v. Reddick, 160 Fed. 898, 88 C. C. A. 80; Parker-Washington Co. v. Cramer, 201 Fed. 878, 120 C. C. A. 216; Alexandria Paper Co. v. C., C., C. & St. L. R. R., 246 Fed. 122, 158 C. C. A. 348, decided by this court in this term and session.

Did the court, assuming it had jurisdiction of the action, commit error on the trial? Defendant's counsel complains because of the instructions of the court, one of which reads as follows:

"The court instructs you that it was the duty of the defendant to provide for the plaintiff a safe place in which to work; *and the plaintiff did not assume the risk of some one on those premises, in the employ of the defendant, pushing a piece of metal weighing from 25 to 70 pounds over the side of the pit.*"

The criticism of the italicized words is based on the assumption that the court instructed the jury that:

"An employé is not held to assume the risk of a negligent act of a fellow servant."

The learned trial judge was, of course, speaking only in reference to the facts in the instant case. So limited and so restricted, we think the court was not in error in charging the jury as a matter of law that plaintiff did not assume the risk arising out of the particular negligence of defendant's employé, relied on in this case.

Other criticisms of the instructions are made, but for want of a proper exception they cannot be considered.

Complaint is also made because the verdict is excessive. The trial judge was in a far better position than are we to weigh the testimony in this regard and to pass upon the credibility of the witnesses. If plaintiff's injuries extended to the back and the spinal column, and he was totally incapacitated for the period testified to by him, we would not be justified in declaring the award excessive. The judge, who heard and saw the witnesses, reduced the verdict by a substantial sum. We cannot say that the verdict as reduced is excessive.

Judgment is reversed, with directions to the trial court to grant to the parties a trial by jury, unless the jury be waived, upon this single issue, Was plaintiff engaged in interstate commerce at the time he received his injuries? and to dismiss the action without prejudice, at plaintiff's costs, if it be found that plaintiff was not engaged in interstate commerce at the time he received his injuries, and to enter judgment upon the verdict in case this issue be determined in the affirmative.

(249 Fed. 285)

COWEN CO. v. HOUCK MFG. CO., Inc.

(Circuit Court of Appeals, Second Circuit. January 16, 1918.)

No. 112.

1. EVIDENCE ⟹90—BURDEN OF PROOF.

The burden of proof in any proceeding lies on that party against whom judgment would be given if no evidence at all were produced on either side, and is determined by the pleadings.

⟹For other cases see same topic & KEY-NUMBER in all Key-Numbered Digests & Indexes

Digitized by Google

2. PLEADING ⟹370—"ISSUES"—NATURE OF.

An issue is a single certain and material point arising out of the allegations of the parties, and should generally be made up of an affirmative and a negative.

[Ed. Note.—For other definitions, see Words and Phrases, First and Second Series, Issue.]

3. EVIDENCE ⟹94—BURDEN OF PROOF—BURDEN OF EVIDENCE.

The burden of proof, as fixed by an examination of the pleadings, does not change, although during the progress of the trial the burden of going forward with the evidence to rebut a prima facie case may shift.

4. TRIAL ⟹146—WITHDRAWAL OF JUROR—AMENDMENT OF PLEADING.

Where defendant totally abandoned the answer served, and relied on an entirely different defense orally stated at trial, the court would have been justified in withdrawing a juror and compelling an amendment, in order that defendant might plead according to the statement orally made and in a manner technically justifying the proof offered.

5. EVIDENCE ⟹90—ORAL STATEMENT OF DEFENSE—BURDEN OF PROOF.

Where defendant abandoned the answer served, and relied on an entirely different defense orally stated, the case must be treated as if the defense relied on had been regularly pleaded, in determining which party had the burden of proof.

6. CONTRACTS ⟹247—MODIFICATION—BURDEN OF PROOF.

In an action on contract, where defendant at trial set up a new and separate agreement alleged to have been orally made, and to have modified the original contract, instead of the denial pleaded in the answer, the burden of proving the oral agreement was on defendant, and charges that such burden never shifted, and that the burden of proving the original contract was on plaintiff, were erroneous and misleading.

Ward, Circuit Judge, dissenting.

In Error to the District Court of the United States for the Southern District of New York.

Action by the Cowen Company against the Houck Manufacturing Company, Incorporated. Plaintiff brought error to judgment on a verdict for much less than was sued for. Reversed, and new trial ordered.

Plaintiff here and below sued to recover the asserted cost and value of doing certain advertising for defendant. The complaint set forth what plaintiff had expended on said advertising, averred that defendant had agreed to pay the same, plus 15 per cent., and demanded judgment accordingly. The answer was a general denial, coupled with a separate defense (so called) that the amount agreed to be paid for "the alleged services and obligations" was some $2,000 less than the amount demanded in the complaint. A bill of particulars was furnished, by which it appeared that plaintiff's claim was made up of a number of separately rendered bills, each covering some definite and separable piece of advertising, and all prepared on the basis of cost plus 15 per cent.

At the trial plaintiff proved a written agreement, dated September 1, 1915, by which defendant employed plaintiff to do what advertising was ordered on the basis aforesaid, viz., cost, plus 15 per cent.; but nothing therein contained prevented a new or special contract being thereafter made for some particular job or jobs. Thereupon defendant admitted in open court liability on all the bills or statements aforesaid, except two, one of which plaintiff withdrew. As to the remaining and largest bill, covering more than one-half of the amount sued for, defendant offered to prove, was permitted so to do, and did prove (to the jury's satisfaction) a new and separate agreement, orally made in De-

Digitized by Google

cember, 1915, by which the particular job covered by the large bill was to be done at a fixed price, which was about $2,000 less than cost plus 15 per cent. This defense was not stated nor suggested in the answer. Before the case went to the jury plaintiff requested the following charge: "The burden of proving modification of the original contract is on the defendant"—and the court declined so to charge.

After some deliberation the jurors returned and asked further instructions as to the burden of proof, whereupon the court said: "The burden of proof is upon the plaintiff to establish its contract, and to establish further that this work was done pursuant to the contract of September 1st." Plaintiff then made the following request by its counsel: "I ask your honor to add to that charge that, if the defendant relies upon a separate contract, then the burden is upon the defendant to prove that separate contract"—to which the court replied: "The burden never shifts. The burden remains on the plaintiff through the case, because the plaintiff brings the lawsuit." To these refusals to charge, and to the charge as made, plaintiff duly excepted, and as the verdict proved that the jury had necessarily found that the separate and special December contract was made as sworn to by defendant (but not pleaded), this writ was taken by plaintiff to the resulting judgment. No alleged error other than that covered by the foregoing is thought to require mention.

S. Michael Cohen, of New York City, for plaintiff in error.

John T. Smith, of New York City (Henry F. Herbermann, of New York City, of counsel), for defendant in error.

Before WARD and HOUGH, Circuit Judges, and LEARNED HAND, District Judge.

HOUGH, Circuit Judge (after stating the facts as above). [1, 2] It cannot be doubted that what determines the position of the burden of proof is the answer to the question, "Who has the affirmative of the issue?" But to reconcile all the rulings made after admitting this principle would be quite impossible. An issue is "a single, certain, and material point, arising out of the allegations of the parties, and generally should be made up by an affirmative and negative." Simonton v. Winter, 5 Pet. 148, 8 L. Ed. 75. Allegations are usually made in written pleadings; therefore the affirmative of the issue is normally determined by inspection of the pleadings.

The rule (in language taken from Stephens' Digest of Evidence) is frequently stated thus:

"The burden of proof in any proceeding lies on that party against whom judgment would be given, if no evidence at all were produced on either side; regard being had to any presumption which may appear upon the pleadings." John Turl's Sons v. Williams, etc., Co., 136 App. Div. 710, 121 N. Y. Supp. 478.

It sometimes happens that a positive defense may properly be introduced under a general denial, in which case the burden of proof is still upon the plaintiff, because that burden is determined by the pleadings, and not the condition of the evidence. Adams v. Pease, 113 Ill. App. 361. An excellent statement of the general rule and its application is found in Small v. Clewley, 62 Me. 155, 16 Am. Rep. 410.

[3] Distinctions have been drawn between the burden of proof, and the burden of evidence—i. e., the duty of producing countervailing testimony (see Chamberlayne's Evidence, § 930 et seq.); but, when

Digitized by Google

the burden of proof is fixed by examination of the pleadings, it does not change, for, as was said in Heinemann v. Heard, 62 N. Y. 455:

"During the progress of the trial it often happens that a party gives evidence tending to establish his allegation, sufficient it may be to establish it prima facie, and it is sometimes said the burden of proof is then shifted. All that is meant by this is that there is a necessity of evidence to answer the prima facie case, or it will prevail; but the burden of maintaining the affirmative of the issue involved in the action is upon the party alleging the fact which constitutes the issue, and this burden remains throughout the trial."

It was this rule, or rather this familiar statement of it, which suggested the quoted remark of the lower court, though it was somewhat inaccurate to say that the burden of proof was upon the plaintiff because the plaintiff brought the suit. It is generally true that the pleadings leave the affirmative of the issue on the plaintiff, and that in the absence of any evidence the plaintiff must suffer defeat; but any plea of the nature of confession and avoidance as plainly puts the burden upon the defendant.

[4] The faulty statement of rule just mentioned would be a matter of no importance, but the difficulty with this case is that the pleadings of the parties are wholly irresponsive to the issues actually made. The case was not tried on the pleadings as written and served, but upon what amounted to oral pleadings made shortly after the trial began, and upon the very proper insistence of the trial court that the issue be simplified. Totally abandoning the answer served, the defendant confessed that it was liable, and liable upon the contract of September 1, 1915, for everything except one bill or item, and there was nothing in the nature of the charge set forth in that item, which in the nature of things took it out of the September contract; therefore defendant undertook to prove the December contract. The trial court would have been justified in withdrawing a juror, and compelling an amendment in order that defendant might plead according to its statement in open court, and in a manner technically justifying the proof it proceeded to offer.

[5, 6] The contract of September 1st in its language covered all advertising, and it was incumbent upon defendant to allege as well as prove that one particular bill had been contracted outside of that agreement. If the written pleading had justified the course of trial, the issue would have been plain; i. e., defendant admitted or confessed the force and effect of the contract of September 1st, but alleged an exception thereto. This was done by what we call an oral pleading, i. e., allegations by word of mouth, and such allegations framed the issue. Upon such an issue the affirmative, and therefore the burden of proof, was upon defendant; and this was the only issue that finally went to the jury.

Laxity of pleading and carelessness in detail cannot be used to either vary the rule or escape its operation. The case must be treated on this record as if the pleading had been regular. It is settled that the burden is on him who alleges any modification of the contract in suit. Denney v. Stout, 59 Neb. 731, 82 N. W. 18; Appeal of Kenney (Pa.) 12 Atl. 589; Anderson v. English, 121 Ala. 272, 25 South. 748. And see Banewur v. Levenson, 171 Mass. at page 12, 50 N. E. 10. In this case

Digitized by Google

defendant finally alleged, not a modification, but a new and separate agreement. The burden was plainly on defendant.

Judgment reversed, with costs, and new trial ordered.

WARD, Circuit Judge (dissenting). If the jury were mystified about the burden of proof, the plaintiff was the cause of it. It asked the court to charge that "the burden of proving the modification of the original contract is on the defendant; they alleged it; we do not." The defect of this request was that it assumed, as I think the court does, that the defendant offered to modify the contract sued on. Modification implies admission, with some change; but the defendant did not confess that the services were rendered under the September contract, and avoid that by new matter. It did not offer to modify that contract, but, on the contrary, denied that it applied to the services in question at all. The plaintiff sued upon what at common law were the common counts in general assumpsit; i. e., without specifying the special contract. Use of the common counts is quite consistent with the requirements of section 481, N. Y. Code of Civil Procedure. Moffet v. Sackett, 18 N. Y. 522; Fulton v. Ins. Co., 4 Misc. Rep. 76, 23 N. Y. Supp. 598. It had a right to proceed in general assumpsit, because the special contract had been fully performed by it and nothing remained to be done, except payment by the defendant. The special contract merely regulated the price. Dermott v. Jones, 2 Wall. 1, 17 L. Ed. 762; Dubois v. Canal Co., 4 Wend. (N. Y.) 285.

The answer contained a general denial, and also set up as a separate defense that the plaintiff was entitled to be paid for its services only the sum of $4,048.82, which the defendant tendered before suit brought and the plaintiff refused to receive. This was not a defense at all, and is to be entirely disregarded as such. It was an admission of liability and allegation of tender, affecting only the question of costs and interest (section 733, Code of Civil Procedure), if properly perfected (section 732). Therefore the cause was properly disposed of by the trial court upon the issue made by the defendant's general denial, which left the burden on the plaintiff to prove how much, if anything, the defendant owed. There was certainly no duty upon the defendant to prove this. The opinion of the court admits that the September contract did not prevent the parties from making other and different contracts. Therefore it was entirely competent for the defendant to show that those services were not rendered under the September contract, but under another and different contract.

Suppose that the plaintiff had sued to recover only the services rendered in connection with the December order; would the defendant have been obliged to plead as a defense that the services were rendered under a different contract or be remediless? And, if not pleaded as a defense, could the court have refused to let the defendant cross-examine the plaintiff's witnesses on this point in the plaintiff's case? I think the defendant could show under its general denial alone by cross-examination of the plaintiff's witnesses in the plaintiff's case, as well as by its own witnesses in its own case, that the services

Digitized by Google

were rendered under a different contract, without in any way relieving the plaintiff of the burden that lay upon it throughout of proving what amount, if any, it was entitled to recover.

(249 Fed. 290)

AMERICAN DRUGGISTS' SYNDICATE v. CONTINENTAL SPECIALTY CO. OF BALTIMORE, MD., Inc.

(Circuit Court of Appeals, Second Circuit. January 16, 1918.)

No. 108.

SALES ⟹24—CONSTRUCTION—OPTION.

A written contract, as modified by defendant's acceptance, relating to the sale by defendant of an ointment manufactured by plaintiff, *held* merely to give defendant an option for the purchase of the formula for the ointment, and not to constitute a binding agreement for its purchase.

In Error to the District Court of the United States for the Eastern District of New York.

Action by the Continental Specialty Company of Baltimore, Md., Incorporated, against the American Druggists' Syndicate. There was a judgment for plaintiff, and defendant brings error. Reversed, and new trial ordered.

Writ of error from a judgment for $45,056.17. The jurisdiction of the District Court depended upon diverse citizenship. The action was upon a contract alleged to have been entered into on the 1st day of April, 1913, by which the defendant agreed to purchase the plaintiff's formula for a certain product known as "the Continental Ointment," together with the right to use the plaintiff's name in connection therewith, for the sum of $50,000. The complaint further alleged that the contract also required the defendant to carry a stock of the products of the plaintiff at its various depots and to pay the defendant 20 cents a pound for the product; that the contract was to last for a period of two years, within which the defendant should have the right to discontinue the sale, and at the end of that two years was to declare its purpose to purchase the formula in question; that the plaintiff was ready and willing to perform the conditions on its part, but that the defendant neglected to push the sale of the products, to carry the stock as far as possible, and to pay the purchase price of $50,000, to the damage of the plaintiff of $50,000.

Upon the trial it appeared that the plaintiff, a Baltimore corporation, was the manufacturer of a certain ointment under a secret formula, which it made at Dayton, Ohio, and in advertising which it had spent approximately $50,000. In the early part of 1913, one Savage, representing the plaintiff, had an interview with one Goddard, representing the defendant, looking toward an agreement by which the defendant should become the selling agent of the plaintiff, and after which an extensive correspondence ensued between the parties. This correspondence is conceded by both sides to be the basis of the parties' rights, and upon its introduction the court dismissed the jury upon motion of both sides for a verdict, and eventually, after due consideration, directed a verdict for the plaintiff for $45,000, the difference between the purchase price of the formula, and what the plaintiff had been able to procure upon its sale, had with notice to the defendant. The correspondence begins on February 18, 1913, by a letter from the plaintiff to the defendant, making a proposal in many respects like that in the letter of April 1, 1913, upon which the plaintiff relies to establish the contract. The chief variation, for the pur-

Digitized by Google

poses of this case, between that letter and the letter of April 1, 1913, is in the following paragraph:

"It will be understood and agreed that at any time during the period of five years you are to have the sole and exclusive right to purchase the good will and business of this company, including its trade-mark and formula for preparing its products, and for which you are to pay the sum of fifty thousand ($50,000.00) dollars in cash within five years from the date of this agreement."

The defendant replied on February 21, 1913, saying that it would undertake no responsibility whatever so far as guaranteeing results were concerned, and on February 28, 1913, the plaintiff again replied, substantially restating the terms of its proposal. To this letter the defendant replied on March 4, 1913, that the arrangement outlined in that letter was satisfactory, and added: "You can either consider this letter a formal acceptance of your proposal as outlined in your communication of February 28, or you can prepare a contract embodying the provisions of that letter and send it on for signature." A delay ensued, owing to the necessity of the plaintiff's procuring the consent of its stockholders, and a notice was issued to the stockholders, calling a special meeting for March 27, to consider a proposal "to give an option" to the defendant for the sale of the corporate assets. After some more correspondence the plaintiff wrote to the defendant on April 1, 1913, a letter of which the following is a copy:

"April 1, 1913.

"Mr. C. H. Goddard, Secretary, American Druggists' Syndicate, Borden and Van Alst Aves., Long Island City, N. Y.—Dear Sir: As requested, we herewith submit for your consideration and acceptance a condensed agreement for the operations between this company and your syndicate.

"It is agreed: That the Continental Specialty Company, as also the American Druggists' Syndicate, shall each contribute, to be sold for their mutual benefit and profit, all stock either of them have on hand of the products of the Continental Specialty Company, including all such that may be in the hands of their distributing depots, or that may be now held on consignment by dealers, also including all printed matter consisting of circulars, posters, cut-outs, electrotypes, etc. That the said products so combined shall be sold by the American Druggists' Syndicate at the regular trade prices to be agreed upon, and the net amount received from such sales shall be equally divided between the syndicate and the company, the amounts to be paid to each the month following the sale thereof. That the Continental Specialty Company shall continue the manufacture of its products under its formula for the purpose of supplying the same to the American Druggists' Syndicate as and when required at twenty (20c) cents per pound net in bulk, payable the 5th of the month following the purchase.

"The American Druggists' Syndicate agrees: To carry a stock of the prepared products as manufactured by the Continental Specialty Company at its various distributing depots, and also as far as possible with the druggists connected with its syndicate. That it will use due diligence in pushing the sale of the said products to the trade generally by advertising, soliciting, and by their travelers and otherwise. That the prices which have been in vogue by the company to the wholesale trade for those products will not be reduced unless by mutual consent in writing. That the net amount paid by the syndicate to the company each month for the ointment furnished in bulk at twenty (20c) cents per pound (less fifteen [15%] per cent. to cover the expense and cost of manufacturing) shall be applied as a credit towards the payment of the fifty thousand ($50,000.00) dollars to be paid to the company, provided the same is paid within five years from this date. That upon the syndicate completing its payment of fifty thousand ($50,000.00) dollars to the company as above it shall at once obtain the trade-mark, formula for preparing the products, and the sole right to use the company's name.

"If at the expiration of two years from this date the syndicate should desire to discontinue this sales agreement, it can exercise that right by giving the company thirty days' previous written notice, and thereupon returning to the company or paying for any unsold products that they or their depots may then have on hand that were furnished by the company free of cost, and all

Digitized by Google

money that may have been credited the syndicate from the proceeds from material furnished in bulk, which would have been a credit had the syndicate exercised the right of purchase, shall be held by the company as compensating damages.

"If at the expiration of two years from April 1, 1913, the syndicate should desire to continue the agreement with the company, the syndicate agrees in that event to purchase from the company for the remaining three years Continental Ointment in amounts of not less than five thousand ($5,000.00) dollars annually, the amounts to be paid for the month following the purchase, and the amount so received by the company, less fifteen per cent. to cover expense and cost of manufacturing, shall be credited to the syndicate on account of the fifty thousand ($50,000.00) dollars purchase price as agreed, and to be paid within five years from April 1, 1913.

"Awaiting your confirmation of the above, and directions for shipping the stock and material we have on hand, we beg to officially confirm the above agreement.

"Yours very truly, Continental Specialty Company,
"Clarence Cottman, President.

"F. A. Savage, Treasurer."

To this the defendant answered by a letter of which the only material portion is as follows: "We have received your consolidated letter covering our proposal, and there is but one objection that we have to make to it, and that is the paragraph which stipulates that we shall buy at least $5,000 worth a year after the second year. We are willing, however, to waive even this, provided it is distinctly and positively understood with your people that we are not sanguine of making a success of the sale of the ointment." To which the plaintiff replied on April 14th, so far as is material, as follows: "We are prepared to withdraw the stipulation put forward, that you are to buy at least $5,000 worth per annum after the second year, leaving the amount that you are to purchase entirely with you to decide. We might suggest, however, that should, after two years, the sales prove such as we mutually hope and expect, you will then commence the payment to us of a substantial amount each year on account of the purchase price. We are perfectly willing to leave to your good judgment the amount you are to pay us annually on account of the $50,000.00 to be paid us within five years from April 1, 1913."

The defendant made some unsuccessful efforts, whose good faith the plaintiff challenges, to sell the ointment during the two succeeding years, and on April 1, 1913, wrote the plaintiff a letter notifying them that they desired to discontinue the sales agreement. This letter presumptively reached the plaintiff on April 2, 1915, and is the breach laid in the complaint. The court held that the notice of April 1st was not in season, as under the contract it should have been given thirty days before the expiration of two years, which would be on or before March 2, 1915. The defendant on this appeal contends that there was no absolute contract to purchase the formula for $50,000, but only an option; and, second, that within the terms of the contract a notice given at the expiration of the two years would be sufficient.

Tomlinson, Coxe & Tomlinson, of New York City (John C. Tomlinson, of New York City, of counsel), for plaintiff in error.

Miller & Auchincloss, of New York City (Albert C. Ritchie and Stuart S. Janney, both of Baltimore, Md., of counsel), for defendant in error.

Before ROGERS and HOUGH, Circuit Judges, and LEARNED HAND, District Judge.

LEARNED HAND, District Judge (after stating the facts as above). The letter of April 1, 1913, was written in response to the suggestion of the defendant in its letter of March 4th that the plain-

Digitized by Google

tiff might treat its own letter of February, 28th as the contract between the parties, or that it might prepare a contract embodying those provisions and send it for signature. The plaintiff adopted the second alternative, and the letter of April 1st begins with the statement that it is submitting "a condensed agreement." We therefore incline to hold that the parties intended the letter of April 1st to take up all the prior negotiations and to be the basis of their mutual rights. This is the position of the plaintiff itself, and since in our judgment the result is no different, whether or not we consider the earlier correspondence, we shall assume that the letter of April 1, 1913, was intended to be the final embodiment of the negotiations, without making any decision upon that question.

We cannot find in that letter any express undertaking to purchase the formula, and the first question resolves itself, therefore, into whether, from reading the document as a whole, it becomes apparent that the defendants agreed to purchase the formula if they did not repudiate the contract within two years, or whether the purpose was to give the defendant an option at any time within five years for that purchase at the price of $50,000. The contract starts with provisions for the sale of the stock of products which either party has on hand anywhere. These the defendant agrees to sell at regular trade prices to be agreed on, the amounts to be divided equally between the two parties. So far the contract cannot be held to be material to this controversy. For the future, the plaintiff was to continue to manufacture its product and supply it to the defendant at 20 cents a pound, which the defendant should pay on the 5th of the month following the purchase. The defendant agreed to carry a stock of these products at its various depots and elsewhere, and to use due diligence in pushing their sale at prices which had theretofore been made current by the plaintiff itself. These are the only express obligations which the defendant assumed in the contract. The rest is to be drawn from inference. Continuing, the contract then provided that the amount paid by the defendant each month, less 15 per cent. for manufacture, should be applied as a credit "towards the payment of the $50,000 to be paid to the company"—i. e., the plaintiff—"provided the same is paid within five years from this date," and that the defendant upon completing its payments should obtain the trade-mark, the formula, and right to use the plaintiff's name.

Here the engagements of the parties cease, for the remaining two paragraphs, about which much of the controversy has turned, relate only to provisions for its continuance or termination. Now it seems to us that the contract up to this point did no more than, in case the defendant chose, while the contract endured, to purchase the formula, to give it the privilege of crediting upon the purchase price 17 cents a pound for all the ointment which it had theretofore purchased, but that it did not commit the defendant to a purchase without an acceptance of the option. Indeed, we think that there can be no reasonable argument to the contrary, unless the remaining paragraphs are considered. Therefore the question turns upon the effect of the two subsequent paragraphs, which, though intended to fix the duration

Digitized by Google

of the "sales agreement," must necessarily be read with the contract as a whole, and are proper to throw light upon the intent of the earlier stipulations.

The first paragraph provides that the defendant may terminate at the end of two years by giving thirty days' previous written notice, that thereupon it shall return to the plaintiff all goods on hand or pay for them, and that all money which would have been credited to the defendant, "had it exercised the right of purchase," shall be held by the plaintiff. Every one likewise concedes that this paragraph contemplates that within the first two years the defendant shall not be bound to declare upon its option; but the plaintiff insists that the contract meant to limit the option to a period of two years, and that, if the defendant did not disavow the contract within two years, it necessarily agreed to take it up. It relies particularly for that construction upon the phrase, "had the syndicate exercised the right to purchase." There is force in this contention. The language seems to imply that all conditions upon the right of purchase would be terminated at the end of two years.

When we come, however, to the last paragraph, a different intent is manifested. Now it is quite true that this paragraph was declined by the defendant in its letter of April 10th, and its refusal was confirmed by the plaintiff's letter of April 14th, so that as a stipulation between the parties it does not exist. Still we may consider it in deciding what the meaning of the prior terms actually was, and from that consideration it seems to us clear that the option continued till the end of the contract. The proposed stipulation bound the defendant to buy at least $5,000 of ointment annually for the remaining three years at the old terms, with the same privilege of crediting all but the cost of it upon the purchase price. Now, if the defendant's continuance of the sales agreement effected an election to buy under the option, such a stipulation would have been wholly irrelevant to the consequent relations of the parties. By hypothesis the plaintiff was to get no profit from the sales, and could have had no motive of its own to continue the business. All it could be concerned with thereafter would be the terms of payment, and the stipulation was not intended merely to fix those terms: First, because it covered only a small part of the price at most; second, because the provision for credit upon the purchase price would be quite out of place; and, third, because it is too clearly an agreement to purchase goods in the future. If, on the other hand, the option still remained open, the purpose and the form of the stipulation both are apparent, and fit with the arrangement as a whole, because the plaintiff would become assured at the least of a substantial sale of its ointment at the profit originally contemplated and the agreement would continue.

The only possible explanation consistent with the plaintiff's position is that the paragraph was inserted to insure the defendant during the last three years of an adequate supply of the ointment; but this is impossible, because it contains a promise of the defendant, and the obligation to purchase a minimum is inconsistent with a bare intention to guarantee the obligor a supply of the goods. The mean-

Digitized by Google

ing of the agreement as originally proposed by the plaintiff does not, therefore, seem to us to admit of much doubt; but it must be conceded that, after the defendant had rejected the minimum purchases during the last three years, there was not much purpose in the division of the period into two parts. Moreover, it is true that the defendant in two years would have had an adequate opportunity to learn what the commercial future of the ointment would be, and ought to have been in a position to decide upon the option. Yet since the plaintiff drafted an original contract such as to show that the defendant was to retain its option for the whole period, we should be slow to impute to the defendant's rejection of the only rigid obligation which it contained a purpose to substitute a much more onerous undertaking, not proposed in the original form submitted by the opposite party. While that rejection did, it is true, somewhat mutilate the scheme as originally proposed, we will not say that the resulting obligations were more favorable to the plaintiff than those it first put forward; such an interpretation would too obviously violate what both sides had in mind.

In the face of such structural difficulties we should not be disposed to lay stress upon much stronger language than is to be found in the words "to be paid," which occur several times in the agreement, or upon the imperfect subjunctive already noticed in the first of the two paragraphs. Were we, however, to go over the language of the two paragraphs with verbal nicety, our conclusion would be here and there confirmed. For example, in the first paragraph occur the words, "discontinue this sales agreement"; in the second, "continue the agreement." Such language, unless controlled by its context, normally refers to the sales agreement earlier provided before, which only bound the defendant to "use due diligence in pushing the sale of the ointment." It seems to us pretty clear, therefore, that the original purpose of the plaintiff was to give the defendant two years generally "to push the sales," and at the end of three years to require it to buy at least $5,000 a year of the ointment. These things the defendant must do absolutely and at its own risk. If it chose at any time within five years to purchase the formula, it might do so by exercising its option, and in that case an account should be struck between the parties, in which the defendant should be allowed 17 cents for each pound that it has purchased theretofore. When the defendant refused the second paragraph, the contract remained for the rest of the term, what it had been before, an obligation to "use due diligence in pushing the sale," and the defendant, having never exercised its option, was under no obligation to pay the purchase price. At best we should feel that any other interpretation was too doubtful to survive the usual canon contra proferentem.

It is quite true that in the letter of April 14th the plaintiff used language indicating that it supposed the defendant would be under an absolute obligation before five years had expired; but this was only in the form of a suggestion to the defendant, and the last of those paragraphs from that letter quoted in the statement of fact puts the matter again in question. In any event, the defendant never made

Digitized by Google

answer to that letter, and no expressions in it can be taken as part of the contract between the parties, except in so far as it accepted the limitation imposed by the defendant in its letter of April 10th. It follows, therefore, that the defendant is not shown to have been under any absolute obligation to purchase the formula, and any consideration of the point upon which the case turned below becomes unnecessary. Upon that question we are not ourselves wholly in agreement. It may be that the plaintiff is right in maintaining that the notice of discontinuance must be served within 30 days before April 1, 1913, and that the defendant was guilty of a breach of the contract; but that breach was at most limited to a failure to push the sales with due diligence, which, as we view it, was the only obligation under which the defendant at any time came, unless it chose to accept the formula. No damages for such a breach were proven, and indeed none were asked upon the trial. If any such point is to be taken, the matter will have to be raised upon a new trial.

The judgment must be reversed, and a new trial ordered.

(249 Fed. 296)

KEATLEY v. UNITED STATES TRUST CO. et al.

No. 73.

(Circuit Court of Appeals, Second Circuit. January 10, 1918.)

ACTION ⟹23—EQUITABLE RELIEF IN ACTION AT LAW—JUDICIAL CODE.

Judicial Code, § 274b, as added by Act March 3, 1915, c. 90, 38 Stat. 956 (Comp. St. 1916, § 1251b), provides that "in all actions at law equitable defenses may be interposed by answer, plea, or replication without the necessity of filing a bill on the equity side of the court"; also that, "in case affirmative relief is prayed in such answer or plea, the plaintiff shall file a replication." *Held*, that it was not the intention of Congress by such provisions to abolish all distinctions between actions at common law and suits in equity, and to establish one form of civil action for all cases; that the only case in which a plaintiff can obtain equitable relief in an action at law by replication is where a replication is required, because of a prayer for affirmative relief in the answer or plea; and that where an answer did not pray for such relief, but pleaded a release, which on its face was a complete legal defense to the action, plaintiff could not, by filing a replication, obtain a cancellation of the release, which could only be done by a bill in equity.

Learned Hand, District Judge, dissenting.

In Error to the District Court of the United States for the Eastern District of New York.

Action at law by Harry Wronkow Keatley against the United States Trust Company and Morgan J. O'Brien, as executors of the will of Herman Wronkow. Judgment for defendants, and plaintiff brings error. Affirmed.

John B. Johnston, of New York City (Vine H. Smith, of New York City, of counsel), for plaintiff in error.

Stewart & Shearer, of New York City, for defendant in error United States Trust Co.

⟹For other cases see same topic & KEY-NUMBER in all Key-Numbered Digests & Indexes

Digitized by Google

A. B. Boardman, of New York City (Charles B. Fernald, of New York City, and George L. Shearer, of New York City, of counsel), for defendant in error O'Brien.

Before WARD and ROGERS, Circuit Judges, and LEARNED HAND, District Judge.

WARD, Circuit Judge. This is a suit by Harry Wronkow Keatley against the executors of the last will and testament of Herman Wronkow, deceased, to recover the sum of $10,000, with interest from November 30, 1911. November 30, 1910, Wronkow died, leaving a large estate. April 25, 1894, he executed the following instrument and delivered it to Lydia Keatley, the plaintiff's mother, on or about April 30:

"Whereas, Mrs. Lydia Keatley, the wife of John Keatley, of Marshaltown, Iowa, has been and is a friend to me, and has in many ways befriended me, for which I wish and hereby agree to repay her for such friendship by contributing to the support and education of her son, Harry Keatley, the sum of $500 per annum until the said Harry Keatley reaches the age of 21 years, and pay the same in quarterly payments, namely, on the first day of May, August, November, and February of each year from the first day of May, 1894. I further agree to bequeath to the said Harry Keatley and direct my executors to carry out my request to pay out of my estate after my death the sum of $10,000 to the said Harry Keatley in lieu of the stipulated yearly $500 as before said, which I agree to pay to him during my lifetime until the said Harry Keatley reaches the age of 21 years, which payment, however, of $500 yearly shall be discontinued and cease after my death. Should I survive the said Harry Keatley, then this foregoing stipulation shall cease and be null and void."

On the same day Mrs. Keatley executed and delivered to Wronkow the following instrument:

"Received from H. Wronkow the above stipulations and provisions, which I have voluntarily accepted for all claims I had, have, or may have, of all and whatever nature or action, for damages in courts of equity or United States."

This transaction followed Mrs. Keatley's employment of an attorney to enforce certain demands she was making against Wronkow. Wronkow made some or all of the annual payments up to the time of the plaintiff's coming of age, March 31, 1904, but died without making any provision for him in his will.

The executors set up in their answer in bar of the plaintiff's claim the following release:

"To All Whom These Presents shall Come or may Concern—Greeting: Know ye, that I, H. W. Keatley, of Washington, D. C., for and in consideration of the sum of six hundred ($600) dollars lawful money of the United States of America to me in hand paid by Herman Wronkow, the receipt whereof is hereby acknowledged, have remised, released, and forever discharged, and by these presents do for myself, my heirs, executors, and administrators, remise, release, and forever discharge the said Herman Wronkow, his heirs, executors, and administrators, of and from all and all manner of action and actions, cause and causes of action, suits, debts, dues, sums of money, accounts, reckoning, bonds, bills, specialties, covenants, contracts, controversies, agreements, promises, variances, trespasses, damages, judgments, extents, executions, claims, and demands whatsoever, in law or in equity, which against him I have ever had, now have, or which against his heirs, executors, or administrators hereafter can, shall, or may have, for, upon, or by reason

Digitized by Google

of any matter, cause, or thing whatsoever from the beginning of the world to the day of the date of these presents.

"In witness whereof, I have hereunto set my hand and seal the 29th day of July in the year one thousand nine hundred and nine."

The plaintiff testified that he had known Wronkow from childhood, and had always been told that he was his guardian. Wronkow was a part of his Christian name, and Wronkow during his childhood gave him toys, took him to the theater, and treated him in a most intimate relation. July 29, 1909, the plaintiff came on from Washington, D. C., saw Wronkow in his office, and signed the release. He testified that when he did so he did not know of the existence of the instrument dated April 25, 1894, and his mother testified that she had never told him of it. The trial judge directed a verdict for the defendants on the ground that the release was a complete bar.

As the plaintiff executed the instrument, knowing that it was a release, it was at best voidable, and not void. Therefore, as the law stood until March 3, 1915, he could only have escaped from it by filing a bill in equity for cancellation, which he had not done. Standard Portland Cement Co. v. Evans, 205 Fed. 1, 125 C. C. A. 1; Hogg v. Maxwell, 218 Fed. 356, 134 C. C. A. 164. The act of March 3, 1915, added section 274b to the Judicial Code in the following words:

"Sec. 274b. That in all actions at law equitable defenses may be interposed by answer, plea, or replication without the necessity of filing a bill on the equity side of the court. The defendant shall have the same rights in such case as if he had filed a bill embodying the defense of seeking the relief prayed for in such answer or plea. Equitable relief respecting the subject matter of the suit may thus be obtained by answer or plea. In case affirmative relief is prayed in such answer or plea, the plaintiff shall file a replication. Review of the judgment or decree entered in such case shall be regulated by rule of court. Whether such review be sought by writ of error or by appeal the appellate court shall have full power to render such judgment upon the records as law and justice shall require." Comp. St. 1916, § 1251b.

The distinction between legal and equitable procedure has been jealously preserved by the Supreme Court. Bennett v. Butterworth, 10 How. 669, 675, 13 L. Ed. 859; Scott v. Armstrong, 146 U. S. 499, 13 Sup. Ct. 148, 36 L. Ed. 1059. We think it quite clear that Congress did not intend by the above amendment to the Judicial Code to abolish all distinctions between actions at common law and suits in equity and to establish one form of civil action for all cases. The provisions of the section apply, with one exception, presently to be considered, to defendants only:

"The defendant shall have the same right * * * as if he had filed a bill embodying the defense or seeking the relief prayed for in such answer or plea. Equitable relief * * * may thus be obtained by answer or plea."

Two references to the plaintiff create some uncertainty:

"That in all actions at law equitable defenses may be interposed by answer, plea or replication. * * * In case affirmative relief is prayed in such answer or plea the plaintiff shall file a replication."

We should construe the word "replication" in the same sense in each case, if possible. The general replication, which is a mere denial intended to put the cause at issue, has been generally abandoned in the Code states and by the Supreme Court in admiralty rule 51 (29 Sup.

Digitized by Google

Ct. xliv) and the present equity rule 31 (198 Fed. xxvii, 115 C. C. A. xxvii). Full effect is given to the provision that an equitable defense may be interposed by replication, by construing "replication" as a special replication setting up a defense to an answer interposing an equitable defense and asking affirmative relief. Such an answer is what is known at law as a "counterclaim." The answer in the present case sets up a purely legal defense. It is not even a counterclaim. To such a defense the section as we construe it does not permit a replication interposing an equitable defense. The plaintiff should have applied by bill in equity for cancellation of the release.

Therefore we are compelled to affirm the judgment.

LEARNED HAND, District Judge (dissenting). It seems to me that we should not construe so narrowly section 274b. The phrase, "equitable defenses may be interposed by * * * replication without the necessity of filing a bill on the equity side of the court," can only mean, I think, this: That where the defendant interposes a bar valid at law, the plaintiff may set up in his next pleading facts avoiding the bar in equity. The suggestion is that it might give the plaintiff the right to plead to the defendant's "equitable defenses" set up in the answer, but that is independently provided for in the fourth sentence of the act. Besides, the defendant's answer to a suit in equity cannot properly be said to be interposed by "filing a bill on the equity side of the court," which is the language of the first sentence.

So far as we may look to the purpose of the section I cannot think there is any doubt. Congress can hardly be thought to have any predilection for plaintiffs' suits in equity rather than defendants', and we must leave a capricious exception in practice, if we do not include a case like this. I agree that the language of the section is not what a Mitford or a Langdell would have used; but the purpose seems to me perfectly plain, and we ought, I think, to try to effect it if we can.

Section 274a (as added by Act March 3, 1915 [Comp. St. 1916, § 1251a]), does not perhaps fit verbally, certainly not if I am wrong about section 274b, but it shows the purpose to avoid recourse to independent suits in equity with their attendant delays. Indeed, without section 274b I should have thought that a replication at law to avoid the release would fall under section 274a, as a "suit at law" which "should have been brought in equity," and that the plaintiff might have amended in the very action and proceeded. It can hardly be that section 274b takes away such a right.

The result here is extremely hard upon the plaintiff, because, so far as I can see, it will not do him any good after this judgment to avoid the release. His claim will be merged, which is all he can sue on. The defendant did not raise any such point, either in the District Court or here, and the only ground for our raising it nostra sponte that occurs to me is that it touches the District Court's jurisdiction over the subject-matter, which seems to me certainly untrue. The parties having tried out the issue, without objection, as they supposed they might under the state practice, the absence of any formal replication is not a defect which the defendant could have urged here for the first time—

Digitized by Google

Keator Lumber Co. v. Thompson, 144 U. S. 434, 12 Sup. Ct. 669, 36 L. Ed. 495 (replication by traverse), Comer & Co. v. Wade, 107 Ala. 300, 307, 19 South. 966, 54 Am. St. Rep. 93 (replication in confession and avoidance)—and in any event it did not raise it. Thus an affirmance will now deprive the plaintiff, even if I am wrong about section 274b, of his undoubted right, had the objection been raised at the trial, to ask for a stay of the action until he could file his bill in equity.

I dissent.

(249 Fed. 300)

In re SALMON.

(Circuit Court of Appeals, Second Circuit. December 24, 1917.)

No. 69.

1. LIMITATION OF ACTIONS ⟹163(1)—PAYMENT ON BARRED DEBT—EFFECT.
A payment made by one who knows he is insolvent, and which he directs to be applied to his credit, and which is made to one who has no knowledge of the insolvency of the payor, takes the debt out of the statute of limitations, so that on the bankruptcy of the payor it may come in and participate in the assets, for the statute does not extinguish the debt, but merely bars the remedy, and is a personal privilege, which the debtor may waive or assert at election.

2. LIMITATION OF ACTIONS ⟹158—PAYMENT ON BARRED DEBT—NOTE.
Where there was only one debt due from the insolvent, his direction to put to his credit a note delivered to the creditor must be construed as a payment on the debt, and to have revived the same, although it had been barred by limitations.

3. BANKRUPTCY ⟹166(3)—PREFERENCES—KNOWLEDGE OF INSOLVENCY.
To constitute a voidable preference under the Bankruptcy Act, the person receiving the payment or benefited by it must have reasonable cause to believe that the debtor was at the time insolvent, and the mere fact that claimant knew from the debtor's statement that he had previously been financially embarrassed and hard pressed by his creditors is not enough to show that a payment on the eve of bankruptcy was a preference, where the debtor had subsequently informed the claimant that he had financed his business and was all right.

Appeal from the District Court of the United States for the Southern District of New York.

In the matter of Charles Salmon, bankrupt. From an order (239 Fed. 413) sustaining an order of the referee, expunging the claim, the estate of Hamilton H. Salmon appeals. Reversed, with directions to reinstate the expunged claim.

This cause comes here on appeal from an order made by the District Court of the United States for the Southern District of New York. The facts are as follows:

The bankrupt, on January 27, 1916, made a payment on account by giving the note of one Bernstein to his order and indorsed by him to the estate of Hamilton H. Salmon, in the sum of $125.09, which note was renewed at maturity. The renewed note was duly paid. At the time the note was turned over to the estate the bankrupt was indebted to it in the sum of $60,067.54. Prior to this payment by the Bernstein note the last payment the bankrupt had made on the account had been made on June 3, 1896, so that the debt had become barred by the statute of limitations. At the time the bankrupt

---

⟹For other cases see same topic & KEY-NUMBER in all Key-Numbered Digests & Indexes

Digitized by Google

turned over the Bernstein note, he directed one of the executors of his brother's estate to credit it to his account, and his account was accordingly so credited. About a week later Charles Salmon was adjudicated a bankrupt, and on April 7, 1917, the estate of Hamilton H. Salmon filed proof of claim. The trustee thereupon moved to expunge the claim on the ground that Charles Salmon was not indebted to the claimant in any sum, and that, if it were, the statute of limitations was a bar to the claim. At the hearing before the referee, one of the executors of the estate, being the executor to whom the bankrupt delivered the note, testified that the bankrupt said that he was having difficulty in business, and that that was all that he said. He was asked whether he said that he could not meet his obligations, and the witness replied, "No; he did not say anything of the kind." The witness was then asked whether he (the witness) inferred from what was said that his brother had difficulties in meeting his obligations; and he answered that he drew no such inference, and that his brother had made the same remark to him in the year preceding, "but he then told me that he was all right again." The witness also said that, every time he saw his brother, he had asked him for payments on the indebtedness due from him to the estate. He saw him very infrequently, and had not seen him in a year before he came to turn over the Bernstein note, and that he remained only about two minutes. "I had two gentlemen in my private office, and he wanted to see me for a moment, and he just left that note and said, 'Put it to my credit,' and he walked right out. He had an engagement, and I had two gentlemen in my private office at the time."

The referee held that the payment did not remove the bar of the statute of limitations from the bankrupt's indebtedness to the estate of Hamilton H. Salmon, and that there was nothing in the evidence sufficient to justify a finding that the turning over of the Bernstein note was an acknowledgment on the part of the bankrupt of the $59,000 indebtedness for which the estate proved its claim. He added that, "even if the claim were allowed, it would have to be on condition that the payment, which was clearly preferential, be paid back into the estate." He thereupon entered an order expunging that claim from the files in his office. An appeal was taken to the District Court, and the order of the referee was confirmed. The District Judge stated that he could not "agree that a bankrupt, finding himself in a desperate financial position, may revive an outlawed claim by a written acknowledgment or a part payment. * * * By it alone the assets of the bankruptcy are charged with an obligation which was either nonexistent before, or against which there was a valid defense, it makes no difference which."

Blau, Zalkin & Cohen, of New York City (Lewis H. Saper, of New York City, of counsel), for trustee.

Williams, Folsom & Strouse, of New York City (Lazarus Goldstone, of New York City, of counsel), for claimant.

Before WARD, ROGERS, and HOUGH, Circuit Judges.

ROGERS, Circuit Judge (after stating the facts as above). [1] The question presented is whether a payment, made by one who knows he is insolvent at the time, and which he directs to be applied to his credit, and which is made to one who has no knowledge of the insolvency of the payor, takes the debt out of the statute of limitations, so that it can come in and share in the assets in the bankruptcy court pari passu with the other claims. We are satisfied that the question must be answered in the affirmative.

A statute of limitations does not extinguish a debt. It goes to the remedy, and not to the cause of action. It is merely a personal privilege which the debtor may waive or assert at his election. The cases are so numerous to that effect that it is not necessary to cite them.

Digitized by Google

In Quantock v. England, 4 Burr. 2628 (1770), which was an action by the assignees of a bankrupt, Lord Mansfield said:

"It is settled 'that the statute of limitations does not destroy the debt'; it only takes away the remedy. The debtor may either take advantage of the statute of limitations, if the debt be older than the time limited for bringing the action; or he may waive this advantage, and, in honesty, he ought not to defend himself by such a plea. And the slightest word of acknowledgment will take it out of the statute. Here the debtor himself has not objected; he has submitted to the commission, and been examined under it. Therefore the objection does not now lie in the mouth of a third person."

The other three judges concurred with the Chief Justice. Such has been the law in England ever since.

In Campbell v. Holt, 115 U. S. 620, 6 Sup. Ct. 209, 29 L. Ed. 483 (1885), the Supreme Court held that the statute of limitations does not, after the prescribed period, destroy or discharge the debt. The debt and the obligation to pay it remains. The debtor is simply permitted, if he elects to do so, to plead the statute as a bar. The Legislature could repeal the statute after the period had run and the bar had been created, and then the creditor might sue and recover on his cause of action, and the constitutional rights of the debtor would not be violated by the legislation. The court, in its opinion written by Mr. Justice Miller, said:

"We certainly do not understand that a right to defeat a just debt by the statute of limitations is a vested right, so as to be beyond legislative power in a proper case. * * * We can understand a right to enforce the payment of a lawful debt. The Constitution says that no state shall pass any law impairing this obligation. But we do not understand the right to satisfy that obligation by a protracted failure to pay. We can see no right which the promisor has in the law which permits him to plead lapse of time, instead of payment, which shall prevent the Legislature from repealing that law, because its effect is to make him fulfill his honest obligation."

The court pointed out that a distinction in this respect exists between statutes of limitation which bar an action to recover real or personal property and those which bar the recovery of a debt. And in Hulbert v. Clark, 128 N. Y. 295, 28 N. E. 638, 14 L. R. A. 59 (1891) the New York Court of Appeals, through Judge Earl, asserts, although in a dictum, a like doctrine. A somewhat analogous question to that arising in the instant case arose in New York before the Supreme Court, General Term, Second Department, in Lawrence v. Harrington, 48 Hun, 618, 1 N. Y. Supp. 577 (1888). In that case, after a debtor had obtained his discharge in bankruptcy, he made a payment on certain promissory notes included in his discharge, and it was held that both as against the bankrupt's discharge and the statute of limitations the old debt was restored, and a judgment obtained thereon was affirmed.

[2] There can be no question, we think, but that the payment which the bankrupt made was intended to apply upon the debt. The District Judge, differing therein from the referee, thought that as there was no other debt between the parties, and as the bankrupt asked to have the note applied to his credit, there could be no possible question that he intended to make a part payment. That is the proper inference to be drawn under the circumstances.

Digitized by Google

[3] We also agree with the District Judge that the facts do not disclose a preference. To constitute a voidable preference under the Bankruptcy Act, the person receiving the payment, or to be benefited by it, must have had reasonable cause to believe that the debtor was at the time insolvent and that the payment would effect a preference; and insolvency under the act means something more than that the debtor was financially embarrassed and hard pressed by his creditors. This condition may exist, and the debtor still be solvent, so that if the executor, who received payment, simply knew that the debtor said that he was having difficulty in financing his firm, it would not taken alone be reasonable cause to believe him insolvent, especially in view of the fact that he had made the same remark a year before, and had thereafter told him that he had "financed" and was "all right again." The law is well established that, even if the creditor entertains doubts concerning the solvency of the debtor, it is not enough. He must have a knowledge of such facts as will carry him beyond this and furnish a reasonable ground to believe that the payment will give him preference over other creditors.

The fact that other creditors as a result must share with the estate of Hamilton H. Salmon in the assets of the bankrupt is no injustice to them. Their claims and the claim of the estate are alike the honest debts of the bankrupt, and the moral obligation is the same as respects each, and it is a maxim of equity that equality is equity.

The order is reversed, and the District Court is directed to reinstate the expunged claim.

(249 Fed. 303)

KING et al. v. BARBARIN et al.

(Circuit Court of Appeals, Sixth Circuit. March 5, 1917.)

No. 3084.

1. CARRIERS ⟹177(3)—CARRIAGE OF GOODS—MISDELIVERY.
   Under the Carmack Amendment (Act June 29, 1906, c. 3591, § 7, pars. 11, 12, 34 Stat. 595 [Comp. St. 1916, §§ 8604a, 8604aa]), the initial carrier of an interstate shipment is liable for a misdelivery by the terminal carrier.

2. CARRIERS ⟹52(1)—NATURE OF BILL OF LADING.
   A bill of lading is both a receipt and a contract of carriage and delivery.

3. CARRIERS ⟹83—BILLS OF LADING—DELIVERY.
   A delivery by a carrier to the consignee is made at the carrier's peril, where the consignee does not surrender the bill of lading.

4. CARRIERS ⟹59—BILLS OF LADING—HOLDERS.
   A carrier, by delivering goods to the consignee without the production of the bill of lading, becomes liable to a bona fide holder of the bill for value, whether by way of purchase or as security for advances before the delivery of goods at destination.

5. CARRIERS ⟹83—BILLS OF LADING—DELIVERY OF GOODS.
   Provision in a bill of lading to notify one other than the consignee does not warrant the carrier in delivering the shipment, save by order of the lawful holder of the bill of lading.

⟹For other cases see same topic & KEY-NUMBER in all Key-Numbered Digests & Indexes

Digitized by Google

6. CARRIERS ⟹83—DELIVERY—BILLS OF LADING.
An actual indorsement by the consignee of a forged bill of lading affords a carrier no more protection than would be given by delivery directly to the consignee without production of any bill of lading.

7. CARRIERS ⟹82—BILLS OF LADING—CONSIGNEES—OWNERSHIP.
Though the consignees were also named in the bill of lading as consignors, yet, where the carrier acknowledged receipt of the shipment, not from the consignors, but from the owners, the consignees were only prima facie owners of the goods shipped.

8. CARRIERS ⟹94(3)—OWNERSHIP OF GOODS—PRESUMPTION.
The presumption of ownership arising from a bill of lading in which the consignee was named as consignor may be rebutted by other evidence showing the real ownership.

9. CARRIERS ⟹56—BILLS OF LADING—TRANSFER.
Transfer of a bill of lading, without indorsement and with intent to pass title, is a constructive delivery of the property which it represents.

10. CARRIERS ⟹83—BILLS OF LADING—DELIVERY OF PROPERTY—OWNERSHIP.
A bill of lading, instead of naming as consignors the sellers, who were the owners, named the consignee as consignor, and directed notice to a third person. The sellers attached to the bill of lading a draft drawn on the consignee, which was dishonored. The bill of lading recited receipt of the shipment, not from the consignors, but from the owners. *Held* that, as the presumption of ownership might be rebutted, and as the bill of lading represented the property, the carrier was not justified in conclusively presuming that the consignees were the owners, and in delivering the property without production of the original bill of lading, possession of which the consignees never secured, having dishonored the draft to which the bill of lading was attached.

11. CARRIERS ⟹83—CARRIAGE OF GOODS—ACTIONS—RECOVERY.
In such case, the sellers having taken back from the bank their dishonored draft, drawn on the consignees, are entitled to recover from the carrier, despite an asserted lack of privity between the sellers and the carrier.

In Error to the District Court of the United States for the Eastern District of Michigan; Arthur J. Tuttle, Judge.

Petition by George F. Barbarin and O. A. Beach, doing business as Barbarin & Beach, against Paul H. King and Dudley E. Waters, receivers of the Pere Marquette Railroad Company. There was an order allowing petitioners' claim, and the receivers bring error. Affirmed.

Parker, Shields & Brown, of Detroit, Mich., for plaintiffs in error.
Thos. A. Conlon, of Detroit, Mich., for defendants in error.

Before KNAPPEN and DENISON, Circuit Judges, and SESSIONS, District Judge.

KNAPPEN, Circuit Judge. Defendants in error, whom we shall call petitioners, were in the grain and elevator business at Freeland, Mich. They sold to Botsford & Barrett, of Detroit, Mich., a carload of beans. On December 5, 1911, petitioners, under the direction of Botsford & Barrett shipped the beans, delivering the car to the Pere Marquette Railroad Company at Freeland, taking from the railroad's agent a standard form original order bill of lading (the draft of which was sent by Botsford & Barrett to petitioners), acknowledging receipt of

Digitized by Google

the car from the "owners." The bill of lading showed that the car was "consigned to the order of Botsford & Barrett, designation Pittsburgh, etc. Notify Arbuckle & Co. at same." At the foot of the bill of lading appeared the names of Botsford & Barrett as shippers. The bill of lading contained this express stipulation:

"The surrender of the original order bill of lading properly indorsed shall be required before the delivery of the property."

Petitioners had not received any payment on account of the car of beans, and on the delivery to them by the railroad company of the bill of lading attached it to a draft drawn by them on Botsford & Barrett, and placed the same in bank to their credit; the draft was sent on for collection and returned unpaid. Botsford & Barrett never had personal possession of the bill of lading. They, however, received from their customer, Arbuckle & Co., payment for the beans. The beans were never recovered by petitioners, their draft was never paid, and they lost the purchase price of the shipment.

The master, to whom were referred the issues raised under the petition filed by Barbarin & Beach in the railroad receivership case for reimbursement of the loss, found that the shipment was delivered by a connecting carrier upon a forged bill of lading, and allowed petitioners' claim. The exceptions to the master's report were overruled, and petitioners' claim allowed by the District Court for the value of the shipment, with interest and costs. As argued here, the case presents but the single question whether, under the facts, the carrier became liable for the sale price of the beans, by reason of their delivery without the surrender of the original bill of lading and in violation of its express terms.

[1] The general rule governing the obligations of common carriers as to delivery of freight are well settled and require little citation of authority. The difficulty lies in their application to the specific facts before us. It should go without saying that under the Carmack Amendment to the Interstate Commerce Act the initial carrier is liable for a misdelivery by the terminal carrier.

[2-4] The bill of lading was both a receipt and a contract of carriage and delivery (Cunard S. S. Co. v. Kelley [C. C. A. 1] 115 Fed. 678, 53 C. C. A. 310); and by the contract, including the express provision that the surrender of the bill properly indorsed should be required before the delivery of the shipment, the carrier agreed to transport the shipment to Pittsburgh and there deliver it to the consignee, or (if the bill had been transferred) to whomsoever should be the lawful holder of the bill. The well-settled rule in such cases is that delivery by the carrier to the consignee is made at the carrier's peril, unless, when made, the consignee surrenders the bill of lading. Union Pacific R. Co. v. Johnson, 45 Neb. 57, 65, 63 N. W. 144, 50 Am. St. Rep. 540. And see Furman v. Union Pacific R. Co., 106 N. Y. 579, 585, 13 N. E. 587.

And a carrier, by delivering goods to the consignee without the production of the bill of lading, is liable to a bona fide holder of the bill for value—whether by way of purchase or as security for advances—before the delivery of the goods at destination. Peoria Bank

Digitized by Google

v. Northern R. R. Co., 58 N. H. 204; Ratzer v. Burlington, etc., R. Co., 64 Minn. 245, 247, 66 N. W. 988, 58 Am. St. Rep. 530.

[5, 6] The provision for notifying Arbuckle & Co. did not mean that the shipment was to be delivered without the order of the lawful holder of the bill of lading (North v. Merchants' Transportation Co., 146 Mass. 315, 319, 15 N. E. 779); and an actual indorsement by the consignee of a forged bill of lading afforded the carrier no more protection than would be given by a delivery directly to the consignee without the production of the original bill.

[7-10] The question thus is: Were petitioners, as between themselves and the carrier, the lawful holders of the bill of lading, entitling them to be recognized as such? It is beyond question that, had petitioners been named in the bill as shippers, a delivery to the consignees without the production and surrender of the bill of lading would have rendered the carrier liable. The carrier contends, however, that by the delivery of the shipment to it upon a bill of lading in which Botsford & Barrett were named both as shippers and consignees petitioners became strangers to the transaction, and relinquished thenceforth all right of control over the beans; that the carrier had neither notice nor knowledge that petitioners intended to retain any control over or ownership in the shipment, and were therefore entitled conclusively to treat Botsford & Barrett as the owners and to deliver the shipment to their order, without requiring the surrender of the bill of lading. This proposition presents the pivotal question in the case.

In our opinion this contention fails to give due weight to the considerations that by the bill of lading the carrier acknowledged receipt of the shipment, not from the "consignors" in terms, but from the "owners"; that the consignees were only prima facie the owners of the beans, notwithstanding the shipment had been consigned to their order (Turnbull v. Mich. Central R. R. Co., 183 Mich. 213, 219, 150 N. W. 132); that "the presumption as to ownership arising from the bill may be explained or rebutted by other evidence showing where the real ownership lies" (The Carlos F. Roses, 177 U. S. 655, 665, 20 Sup. Ct. 803, 807, 44 L. Ed. 929); and that the actual owner of the goods was entitled to the benefit of the express provision of the contract that the shipment should not be delivered without the surrender of the bill of lading.

Petitioners were in fact owners of the beans at the time of their delivery to the carrier. The latter delivered to them a bill of lading which was the symbol of the property named therein. Its transfer to them by the consignors, without indorsement and with intent to pass the title, would have deprived the latter of control of the goods and have constructively delivered them to the former. Merchants' Bank v. U. R. R. & T. Co., 69 N. Y. 373, 379; Bank v. Railroad, 58 N. H. 203, 204. Under such delivery, with the intent stated, it would not be necessary to the protection of petitioners' rights that they give notice thereof to the carrier who held the property. Forbes v. Boston & Lowell R. R. Co., 133 Mass. 154, 156; Union Pacific R. R. Co. v. Johnson, 45 Neb. 57, 63 N. W. 144, 50 Am. St. Rep. 540. By the transaction in question Botsford & Barrett presumably acquiesced, to say the least, in pe-

Digitized by Google

titioners' retention of the bill. The fact of such retention, under the circumstances shown, was, in our opinion, evidence of an intent on the part of petitioners to hold the title until the beans were paid for, so far as necessary to secure such payment, and of the consent of Botsford & Barrett thereto. Merchants' Bank v. U. R. R. & T. Co., supra, at page 380. Under these circumstances, and in view of the practice of grain dealers to ship goods and collect therefor on draft accompanied by bill of lading, we think the carrier was not entitled, from the mere fact that Botsford & Barrett were named as shippers, conclusively to presume that petitioners had received payment for the beans, but was fairly charged with notice, not only that petitioners might at least not have received their pay, but of whatever claim they might turn out to have, so far as evidenced by their possession of the bill of lading.

[11] Had petitioners not taken back from the bank their discredited draft on Botsford & Barrett, the bank, in our opinion, would clearly be entitled to recover. This proposition finds express support in Canandaigua Natl. Bank v. Cleveland, etc., Ry. Co., 155 App. Div. 53, 139 N. Y. Supp. 561, affirmed 214 N. Y. 694, 108 N. E. 1091. There, as here, the owner and seller of the goods shipped took from the carrier a bill of lading in which the consignee was named as consignor, and negotiated at a bank a draft on the consignee for the purchase price, accompanied by the bill of lading. The case differs from the instant case, so far as seems important, only in the fact that the sellers did not take up the draft from the bank, and the suit was by the latter; but the decision was not rested upon the existence of rights in the bank superior to those of the seller of the goods and pledgor of the bill, but upon the proposition that the seller held the title and had the right to sell the same to the bank. Indeed, by the commercial law, as declared by the decisions of the Supreme Court and by the courts of the majority of the states, a bill of lading, while negotiable, is not so in the same sense as a promissory note; and the transferee for value, however innocent, must trace his title back to the owner and transferrer. Friedlander v. T. & P. Ry. Co., 130 U. S. 416, 425, 9 Sup. Ct. 570, 32 L. Ed. 991; Atchison, etc., Ry. Co. v. Harold, 241 U. S. 371, 377, 36 Sup. Ct. 665, 60 L. Ed. 1050; Douglas v. Bank, 86 Ky. 176, 179, 5 S. W. 420, 9 Am. St. Rep. 276; Empire Transportation Co. v. Steele, 70 Pa. 188. The asserted lack of privity between the seller and the carrier would apply to the Canandaigua Case, if applicable here. But there was, in our opinion, no lack of privity in the instant case between the carrier and the actual owners of the goods, clothed with the possession of the bill of lading for the protection of their rights. In our opinion the rights of petitioners are not made less than those the bank would have had from the mere fact that their ownership antedated the shipment, and that the bill of lading was retained by them for the express protection of their antecedent ownership and right to receive pay before parting with title. The nature of the contract has not been changed, nor has the carrier been injured, by the fact that Botsford & Barrett were named in the bill of lading as consignors. Had they actually made the shipment, the rights of others would still be likely to intervene, as, for example, those of subsequent

Digitized by Google

pledgees, to secure advancements, or those of petitioners, under actual delivery of bill of lading by Botsford & Barrett, to secure payment of their draft for the price of the beans. We think it clear that in the latter case petitioners would have been protected. We are not impressed that the protection is lost because their ownership antedated the shipment, and because the bill of lading was retained by them, instead of being manually turned over to them by Botsford & Barrett. Petitioner's loss is due directly to the carrier's failure to observe its contract.

We have not overlooked the decisions cited by defendants as directly sustaining their contention, viz., St. Louis Southwestern Ry. Co. v. Gilbreath (Tex. Civ. App.) 144 S. W. 1051, and Nelson Grain Co. v. Ann Arbor R. R. Co., 174 Mich. 80, 140 N. W. 486. What we have said indicates that we do not find these cases persuasive. While the facts in the Nelson Grain Company Case were practically the same as here, not only was the decision by a divided court, but the force of the majority opinion is to our minds affected to some extent by the later unanimous decision in Turnbull v. Mich. Central R. R. Co., supra, although the two decisions are readily distinguished.

In our opinion, the order of the District Court, allowing plaintiffs' claim, should be affirmed.

(249 Fed. 308)

ALABAMA & V. RY. CO. et al. v. AMERICAN COTTON OIL CO.

(Circuit Court of Appeals, Fifth Circuit. February 4, 1918.)

No. 3061.

1. CARRIERS ⟹121—LOSS OF GOODS—LIABILITY.
   Where a consignee of cotton oil furnished its own tank cars for the shipment, and it was not apparent that the inner valve in the car had not been closed, the railroad company, though bound to exercise a high degree of care, cannot be held liable for loss of the oil resulting from failure to securely close the valve, notwithstanding the outer cap might have prevented the escape, had it not been defective; it appearing cars were often transported without fastening the outer cap.

2. CARRIERS ⟹136—LOSS OF GOODS—ACTION—JURY QUESTIONS.
   In an action against a railroad company for loss of cotton oil shipped in a tank car furnished by the consignee, the question whether railroad company was negligent, or whether the loss resulted from failure of the shipper's servants to securely fasten the inside valve of the car, *held*, under the evidence, for the jury.

3. CARRIERS ⟹117—LOSS OF GOODS—LIABILITY—LEASE OF CAR.
   Where a railroad company made an allowance of the freight because the consignee furnished its own tank car, the company, as it exercised no right over the car, except for the limited purpose of transporting the shipment, should not be treated as a lessee.

In Error to the District Court of the United States for the Southern District of Mississippi; Henry C. Niles, Judge.

Action by the American Cotton Oil Company against Alabama & Vicksburg Railway Company and another. There was a judgment for plaintiff, and defendants bring error. Reversed.

⟹For other cases see same topic & KEY-NUMBER in all Key-Numbered Digests & Indexes

Digitized by Google

R. H. Thompson, of Jackson, Miss., T. C. Catchings, of Vicksburg, Miss., and J. Blanc Monroe and Monte M. Lemann, both of New Orleans, La. (J. H. Thompson, of Jackson, Miss., on the brief), for plaintiffs in error.

R. L. McLaurin, of Vicksburg, Miss. (McLaurin & Armistead, of Vicksburg, Miss., and Sullivan & Cromwell, of New York City, on the brief), for defendant in error.

Before WALKER and BATTS, Circuit Judges, and EVANS, District Judge.

BATTS, Circuit Judge. The American Cotton Oil Company, on March 16, 1914, contracted to purchase cotton seed oil from the Caldwell Cotton Oil Company of Vicksburg. It delivered to the latter company, on a spur of the Yazoo & Mississippi Valley Railroad, which connected with the plant of the Cotton Oil Company, one of its own oil tank cars, for the loading of the purchased oil. After loading, the car was delivered to the Alabama & Vicksburg Railway Company for shipment, and that company issued its bill of lading to the Caldwell Cotton Oil Company, "notify the American Oil Company at Cincinnati." The Caldwell Cotton Oil Company drew its draft upon the American Cotton Oil Company, with bill of lading attached, and the draft was duly paid. The tank car was received by the railway company and transported by it to Meridian, Miss., where it was delivered to the Alabama Great Southern Railroad Company. The car moved from Meridian on March 27, 1914, and when it reached McClures, Ala., 40 or 60 miles from Meridian, it was discovered that the tank was leaking. The train was stopped and efforts made to prevent the leakage, but all the oil escaped. Suit was by the American Cotton Oil Company to recover from the two railroads the amount paid for the oil. The Alabama Great Southern Railroad Company filed a plea of the general issue, and gave notice, in accordance with the Mississippi practice, of what it would undertake to prove, viz.: That by the terms of the bill of lading it was contracted by the Caldwell Cotton Oil Company and the railroad that neither the initial railroad nor any carrier in possession of the property should be liable for any loss thereto caused "by the act or default of the shipper or owner"; that the oil was loaded by the consignor, by its own employés and agents, and without any participation by the railroad company, into a car specially manufactured for receiving and transporting oil, which was the property of plaintiff, and furnished by it to the Caldwell Cotton Oil Company for the purpose of receiving the oil; that the tank was carelessly loaded by the agents and employés of the Caldwell Cotton Oil Company; that the inner valve was not closed; that the outer valve or discharge pipe beneath the car, through which the oil was intended to be drawn off, was closed by a cap screwed upon it, but that the threads were worn so that it was not tightly screwed on, by reason of which it fell off; that if the inner valve had been closed, the defect in the cap of the outer valve would have made no difference; that it had no means of knowing whether the inner valve had been closed or not; that the cap on the top of the car was screwed down

Digitized by Google

tight, and that whether the inner valve was closed could not have been ascertained, except by unscrewing the cap and making an examination from the top, which it was under no obligation to do; that outwardly the car was in good and safe condition; that the car was delivered to the Alabama Great Southern Railroad Company at Meridian, with its condition still apparently good, and that the receiving company did not know that the inner valve was not closed, or that the cap on the discharge pipe was not tightly screwed on; that, when the fact was discovered that the oil was leaking, it immediately endeavored to stop the leak; that at no time after the tank was placed in its possession was it roughly handled; and that there was no negligence on its part, and no want of care or foresight.

The allegations with reference to the sale of the oil, furnishing the car, delivery to the railroads, and the loss of the oil were proved. The tank car in which the oil was loaded was of steel. It was filled from the top and was designed to be emptied by a valve in the bottom. This valve was closed by a rod, which ran to the top of the car, held in place by a coilless spring. Underneath the valve was a cap that screwed from the bottom of the car. The cap was not designed to hold the contents of the car, but would have had that effect if the screw threads had not been defective. The unscrewing of this cap would not have the effect of emptying the car, the valve being in place.

The testimony indicates that the car was filled by two employés of the Caldwell Cotton Oil Company. One of these testified that, when they loaded the car, the first thing they did was to take the cap off. He then put the pipe in, and he states that he saw that the inner valve was in good condition. He said that he looked into the car with a light, but did not go down into it; that there was about an inch of something that looked like oil in the tank, and it apparently being clean cotton seed oil, he loaded on top of it. He said that to find out what was in the tank he raised the valve and let it fall back, and that it was left without any further examination.

The balance of the testimony is with reference to the investigations and examinations which were made and the testimony of persons who were familiar with cars of this character and the valves used in this car. This testimony all indicates that, if the valve had been put properly in place, it could not have gotten out of its gasket, even with rough handling by the railroad. The evidence strongly indicates that, when the valve was pulled up by the employé of the Caldwell Company before loading, it did not get back properly into place. The evidence also indicates that the cap underneath, while it might have held the oil, was not intended for that purpose, and that an inspection which would have disclosed a deficiency in this cap would not have suggested the necessity of making any change or repair in the car; it appearing that not infrequently these caps were unscrewed in transit.

[1, 2] The evidence is ample to justify the submission to the jury of the defense of the railroad companies, to the effect that the loss of the oil resulted from the negligence of the employés of the Caldwell Cotton Oil Company, provided such negligence could, under any circumstances, relieve the railroads accepting the car and issuing a bill

Digitized by Google

of lading therefor. The trial judge, at the instance of the plaintiff, American Cotton Oil Company, directed a verdict against the railroads.

If the defect in loading, or the defect in the car, had been apparent to the railroad company at the time of the acceptance of the car, the railroad company would doubtless be held responsible, notwithstanding the car had been chosen by the shipper and had been loaded by him. Even under such circumstances, to permit recovery by the shipper would involve a questionable policy. While there is every reason for holding the railroad companies to a very high degree of care in the exercise of their duties to the public, it can scarcely consist with public policy to encourage the furnishing by shippers of bad cars or bad containers of any kind, or defective loading, by excusing them from the results of their negligence. No such question, however, arises in this case. The evidence would justify a finding to the effect that the damage resulted from the negligence of the shipper in the loading, and that the negligence in the loading, whereby the valve was not properly seated in its gasket, could not have been ascertained by the railroad, except by unloading the car at a time when there was no apparent reason for unloading.

The following cases support the proposition that the carrier is not to be held responsible for loss occasioned by imperfect packing, or other carelessness on the part of the shipper: Carpenter v. Baltimore & Ohio Railroad Co., 6 Pennewill (Del.) 15, 64 Atl. 253; Pennsylvania Co. v. Kenwood Bridge Co., 170 Ill. 645, 49 N. E. 217; Klauber v. American Express Co., 21 Wis. 21, 91 Am. Dec. 452. The case of Gulf, Colorado & Santa Fé Ry. Co. v. Wittnebert, 101 Tex. 368, 108 S. W. 150, 14 L. R. A. (N. S.) 1227, 130 Am. St. Rep. 858, 16 Ann. Cas. 1153, involved a case of substantially the same character as this, and the ruling was in accord with the conclusion we have reached. There seems to be no adjudication by any federal court upon the subject, but we are entirely satisfied with the reasoning and conclusions of the state courts.

[3] The plaintiff undertakes to defend the action of the trial court upon the ground that the car became, by its acceptance by the railroad company and the circumstance that an allowance was made for its use, leased to the railroad; and insists that the rule should be the same as where the railroad company had furnished the car. In fixing the rate to be charged for the transportation of oil, a reduction is made on account of the fact that the car is furnished by the shipper. This is in no sense a lease to the railroad company. The railroad company exercises no right over it, except for the limited time and purpose for which it is tendered by the shipper.

The instructions asked by defendants cannot be regarded as a request for the court to determine the questions of fact. The issues tendered by the defendant railroad company should have been submitted to the jury.

The case will be reversed for proceedings in conformity herewith.

Reversed.

Digitized by Google

(249 Fed. 312)

ALABAMA GREAT SOUTHERN R. CO. v. MORRIS & CO.

(Circuit Court of Appeals, Fifth Circuit. February 4, 1918.)

No. 3088.

1. TRIAL ⟹143—CONFLICTING EVIDENCE—JURY QUESTION.
Where the evidence is conflicting, issues should be submitted to the jury.

2. CARRIERS ⟹121—CARRIAGE OF GOODS—LIABILITY OF RAILROAD COMPANY.
Where a seller of cotton seed oil loaded same in its own tank car, buyer cannot, having paid bill of lading with draft attached, recover against railroad company for loss of oil resulting from defect in car not discoverable by reasonable inspection, even though railroad company made seller, who was required by contract to deliver oil, an allowance for use of car.

In Error to the District Court of the United States for the Southern District of Mississippi; Henry C. Niles, Judge.

Action by Morris & Co. against the Alabama Great Southern Railroad Company. Judgment for plaintiff, and defendant brings error. Reversed and remanded.

Albert S. Bozeman, of Meridian, Miss. (B. F. Cameron, Jr., of Meridian, Miss., on the brief), for plaintiff in error.

Geo. B. Neville, of Meridian, Miss. (Neville, Stone & Currie, of Meridian, Miss., and Borders, Walter & Burchmore, of Chicago, Ill., on the brief), for defendant in error.

Before WALKER and BATTS, Circuit Judges, and EVANS, District Judge.

BATTS, Circuit Judge. Morris & Co. instituted suit against the Alabama Great Southern Railroad Company in the circuit court of Lauderdale county, Miss., alleging that it had purchased from the Eagle Cotton Oil Company, of Meridian, a tank of cotton seed oil, which, under the terms of the purchase, was to be delivered by the seller to the plaintiff at Chicago; the plaintiff to pay the costs of freight and to pay the price to seller upon presentation of its draft with bill of lading. The railroad company received the oil from the oil company, and issued its bill of lading. Draft was drawn, with bill of lading attached, and paid. It is alleged that the oil was never delivered to plaintiff, and prayer is made for judgment for its value.

The case was removed to the District Court of the United States for the Southern District of Mississippi, where the defendant set up that the tank car in which the cotton seed oil was shipped was the car of the shipper; that it was not furnished by the defendant to the shipper or to the consignee, but was furnished and selected by the Eagle Cotton Oil Company; that the oil was loaded by the shipper at its plant at Meridian, Miss., in the car so owned and selected by it for that purpose; that when the oil was tendered for shipment it was already loaded in the car, to be carried and consigned to the order of the shipper at Chicago, Ill.; that the car was defective, in that it was

Digitized by Google

an old car, and that the tank had been worn through at a point where it rested on a support bracket; that the tank had been patched by riveting a thin metal patch over the worn place; that the metal body of the tank at that place was thin and worn and weak; that the patch had not been applied in a workmanlike manner, but so applied that the ordinary wear and tear incident to the careful hauling of the car when loaded caused the body of the tank to crack and break alongside the edge of the patch, whereby the contents was lost; that the defect was known to the shipper, but was not known to the defendant, although the defendant inspected the car with proper and reasonable care, both at the time and place of shipment and at other stations while the car was in transit; that the defect was concealed under the iron and wooden supports of the tank, and was not discoverable by reasonable inspection of the car; that the shipper, under whom the consignee claims, and who was the agent of the consignee in making the shipment, was negligent in furnishing and selecting a defective car and in loading oil therein; that the car and contents were handled by defendant and its connecting carrier with all reasonable care, and that the injury and damage suffered by the plaintiff is the fault of the shipper.

In answer to this, the plaintiff pleaded that the defendant had leased from the Cotton Oil Company the tank car, in which the cotton seed oil was loaded, and had agreed to pay the Oil Company 3¼ cents per mile for said car; that an agent of the defendant at Chattanooga, Tenn., inspected the tank car, and discovered that the oil was leaking therefrom, and placed on the car a bad-order card, calling attention to the leak; that thereafter the car was carried by the defendant to its shop at Chattanooga, but that defendant carelessly and negligently failed, either to stop the leak or to transfer the oil to another car; and that thereafter the oil was lost.

The demurrers to the answer and replication were overruled, and evidence presented to the jury. At the end of the introduction of testimony, the plaintiff filed a motion requesting the court to instruct a verdict for plaintiff for the amount sued for, assigning as reasons for the motion: (1) Because, under the law, it was the duty of the defendant to furnish a fit and suitable car in which to carry the oil in controversy from Meridian, Miss., to Chicago, Ill., and the defendant cannot escape this duty by showing that the car belonged to the consignor, and was defective when it was delivered to the defendant; (2) because the testimony of the defendant shows that a defect, which the defendant claims existed, was an open and patent defect; (3) because the evidence of defendant shows that an employé of the defendant at Chattanooga, Tenn., discovered a leak in the car, and the defendant did nothing to stop the leak or to transfer the oil to another tank; (4) because the evidence shows, without contradiction, under tariffs adopted by the defendant, defendant agreed to pay the consignor, the Eagle Cotton Oil Company, the owner of the car, three-fourths cents per mile loaded and empty for said car, and also agreed to make all necessary repairs on said car while in its possession at the cost of the owner of the car; (5) because the testimony does not warrant the jury in finding a verdict for the defendant against the plaintiff; (6) because the defendant has failed to prove that it made a careful in-

Digitized by Google

spection of the tank car in controversy by a competent inspector, to discover any defects in said tank car; (7) because the defendant has failed to prove that the loss of the oil resulted solely from a defect in the tank which was hidden and not discoverable upon a careful inspection by a competent inspector.

This motion was sustained by the court, who directed the jury to return a verdict against the defendant for the amount sued for. From the judgment rendered upon this verdict the proceedings in error have been taken.

Taking up the several grounds upon which the motion is based:

(1) The shipper did not call upon the defendant to furnish a fit and suitable car in which to carry the oil in controversy, but tendered to the company a car filled with oil and ready for transportation.

(2) The question as to whether or not the defect which the defendant claims existed was an open and patent defect was one which should have been submitted to the jury.

(3) The evidence shows that an employé of the defendant, or of one of its connecting lines, upon an inspection of the car, made a report as follows:

"Bad Order. Marked for Ld Shop 8-17, for the following repairs: 1 brake lever & 3 brake pins gone. Brake ratchet wheel loose brake—B—Oil leaking out A & B 12/37 p. m."

The car was put in the shop and repairs made, but the evidence indicates that no leak was found, and a subsequent inspection when the car left Chattanooga failed to disclose any defect or leak. The evidence with reference to the inspection and repair is of a character to be submitted to the jury.

(4) The evidence shows, without contradiction, that the Eagle Cotton Oil Company received a bill of lading for the car which was tendered, and that, in reaching the rate to be charged, a deduction is made by the applicable tariff on account of the furnishing of the car by the shipper. This did not constitute a lease of the car to the railroad company. During the time the car was in transit, the railroad company was under obligations to exercise reasonable care to make the necessary repairs at the cost of the owner. The issue as to whether or not this was done should have been submitted to the jury.

(5) The evidence in the case, with reference to all contested issues, was conflicting, and was such as would have warranted the jury in finding a verdict for either party.

(6) The issue as to whether defendant made careful inspection of the car by competent inspectors was one which should have been left to the jury.

(7) The question as to whether the loss of the oil resulted solely from a defect in the tank which was hidden and not discoverable upon a careful inspection by a competent inspector is one with reference to which any finding by the jury could properly be sustained.

[1, 2] The matters set up by the railroad company, if true, constituted a complete defense to plaintiff's cause of action. See Alabama & Vicksburg Ry. Co. v. American Cotton Oil Co., 249 Fed. 308, 161 C. C. A. 316, this day decided. Upon all of these issues there was

Digitized by Google

conflicting testimony, and they should have been submitted to the jury under proper instructions.

The judgment is reversed, and the cause remanded for proceedings not inconsistent herewith.

Reversed and remanded.

(249 Fed. 315)

SHEATZ v. MARKLEY et al.

(Circuit Court of Appeals, Third Circuit. January 30, 1918. Rehearing Denied March 12, 1918.)

No. 2304.

1. ASSIGNMENTS ⟹58—PARTIAL ASSIGNMENTS—EFFECT.
   It is the rule in the federal courts that, unless a debtor agrees to accept a partial assignment of a debt due by him, he is not bound thereby.
2. CORPORATIONS ⟹406(3)—SECRETARY—AUTHORITY OF.
   That the secretary and treasurer of a corporation was in charge of its office and accounts does not show that he was empowered to accept a partial assignment of a debt due by the corporation, in the absence of evidence that he was so held out.
3. CORPORATIONS ⟹426(2)—SECRETARY AND TREASURER—AUTHORITY—RATIFICATION.
   Where the secretary and treasurer of a corporation was not capable of binding the corporation by assenting to a partial assignment, he could not bind it by purporting to ratify his unauthorized act.
4. EVIDENCE ⟹155(8)—ASSIGNMENTS—PARTIAL ASSIGNMENTS.
   Where contractors sued a corporation to the use of plaintiff, to whom they had made a partial assignment of a debt due them, and an auxiliary ledger evidencing the assignment was introduced in evidence, other books of the corporation, showing transactions between the contractors and the corporation, were admissible.
5. EVIDENCE ⟹234—ADMISSIONS—ADMISSIBILITY.
   In an action against corporation by contractors, to the use of one to whom they had made a partial assignment of a debt due them, evidence of admissions made by the contractors that the contract on which the claim was based had not been performed by them though occurring after the alleged partial assignment, are admissible in evidence; the acceptance of the assignment having been denied, and the time that the admissions were made going only to their probative force.

In Error to the District Court of the United States for the Eastern District of Pennsylvania; J. Whitaker Thompson, Judge.

Action by John R. Markley and Isaiah B. Miller, to the use of E. Kirby-Smith, against the International Lumber & Development Company, whose receiver, John O. Sheatz, was afterwards substituted as defendant. There was a judgment for plaintiffs, and defendant brings error. Reversed, and new trial awarded.

Owen J. Roberts, Olin Bryan, and Harry Reiss Axelroth, all of Philadelphia, Pa., for plaintiff in error.

Henry J. Scott, of Philadelphia, Pa., and Fred H. Atwood, of Chicago, Ill., for defendants in error.

Before BUFFINGTON, McPHERSON, and WOOLLEY, Circuit Judges.

⟹For other cases see same topic & KEY-NUMBER in all Key-Numbered Digests & Indexes

Digitized by Google

McPHERSON, Circuit Judge. In this action the use plaintiff, E. Kirby-Smith, sued the International Lumber & Development Company (whose receiver, John O. Sheatz, was afterward substituted as defendant), claiming to recover money due or to become due by the company to the legal plaintiffs, Markley & Miller.

He based his claim on Markley & Miller's assignment to him on August 28, 1911. Several years before that date they had contracted with the company to cultivate and develop a ranch in Mexico, and had employed Kirby-Smith as manager; his duties requiring him to live on the ranch and to look after the work on the ground. In 1911 he gave up his employment, and on August 28 he met Markley & Miller in Chicago, where his claim against them was compromised, and the sum of $105,000 was agreed upon as due. Thereupon they executed an assignment of that amount out of such money as might then be due or might become due thereafter upon their contract with the company. They also signed notes aggregating $105,000, and drew drafts upon the company in the same amounts as the notes and falling due on the same dates. The plaintiff offered evidence to the effect that C. M. McMahon, the company's secretary and treasurer, was present at the settlement and agreed to the assignment on behalf of the company, and also offered evidence tending to show that Markley & Miller had performed the original contract. He asserted that during the year 1912 the company agreed with Markley & Miller that about $364,000 was due to them under the contract, and proved the payment of the first draft, for $4,000, and the refusal of the others.

The assignment was only partial, and the use plaintiff undertook the burden of showing the company's acceptance, as well as the fact that it owed to Markley & Miller, either on August 28 or thereafter, enough money to pay the amount assigned. In the effort to establish these facts, he offered evidence of McMahon's presence in Chicago, and his declaration at the conference there that the company owed or would owe Markley & Miller $400,000 under the contract, and would pay the drafts covering their assignment. This raised the question of McMahon's authority to bind the company, and to support his authority the plaintiff called the chief bookkeeper, who testified that McMahon conducted the company's correspondence, had full direction of its funds, and was in general charge of the office. The by-laws were not offered, nor was any resolution of the board of directors referring to McMahon's authority. It appeared that when he returned from Chicago he gave the bookkeeper a list of the drafts, so that a memorandum of their amounts and due dates might be made, and that he directed the payment of the first draft, and the dishonor of the others. The plaintiff also offered evidence that Markley & Miller had agreed to pledge certain collateral security with their notes, and he attempted to show that the company had taken part in carrying out this agreement. On this point the facts were these: The company's stock was to be paid for in installments; until all the installments were paid, the subscribers received, not the stock itself but a form of contract, and it was a definite amount of these stock contracts that Markley & Miller agreed in August to pledge as collateral.

Digitized by Google

In September, under some arrangement that was not fully explained, the company issued stock contracts in the name of Markley & Miller, who assigned them in blank and pledged them as security for the notes. On some of these contracts the stock was afterwards issued, apparently in the name of a dummy. It was not proved that the company issued the stock contracts for the purpose of carrying out Markley & Miller's assignment, or with knowledge thereof. This is an outline of the plaintiff's case on the subject of the company's acceptance of the assignment.

On the other question—whether Markley & Miller had performed their contract with the company, and, if so, how much was due thereon—the plaintiff offered the following evidence: He attempted to prove the company's declaration against interest, contained in an account with Markley & Miller, kept in a book that was produced at the trial and called an "auxiliary ledger." He called the bookkeeper to identify the volume as an official record of the company, but the witness testified that, although the book had been kept in the principal office, it was not one of the company's official records, and did not contain all the entries that were found in other books concerning Markley & Miller's debits and credits. This ledger, however, was admitted in evidence as a declaration against interest, and the account therein showed that the company, at and after August 28, owed the contractors much more money than the amount assigned. The receiver attempted to cross-examine the witness, in order to show what books of the company contained the complete transactions with Markley & Miller, and attempted later, as a part of his own case, to offer other books of the company to show the true state of their account. But the trial judge declined to allow the cross-examination, and declined also to admit the other books as part of the receiver's case, for the purpose of showing the account as a whole. The receiver then offered to prove that certain specific items, not contained in the "auxiliary ledger," were proper charges against Markley & Miller; but the offer was excluded, on the ground that these items had been charged against one or other of the contractors individually. Apparently neither Markley nor Miller had done any business with the company, except under the contract of October, 1904.

The court asked the jury to find (1) whether McMahon had actual authority to bind the company by his acceptance of the assignment, or whether he had been previously held out as having such authority; and (2) whether the auxiliary ledger showed a sufficient indebtedness to Markley & Miller at and after August 28. As part of the charge, the jury was instructed that sufficient facts (if believed) were in the case to establish McMahon's authority, but that the jury must determine from the evidence whether McMahon did accept the assignment for the company.

[1-3] We regret that another trial of this case must be had, but we see no way to avoid it. On the two fundamental questions in dispute erroneous decisions were made that cannot be disregarded. Whatever the rule may be in other tribunals, the rule in the federal courts is that, unless a debtor agrees to accept the partial assignment of a

Digitized by Google

debt due by him, he is not bound thereby. Mandeville v. Welch, 5 Wheat. 277, 5 L. Ed. 87, 1 Rose's Notes (Rev. Ed.) 1041; 2 Rul. Case Law, 618, § 26. This being so, the plaintiff was bound to prove that the company had accepted Markley & Miller's assignment, and this in turn depended essentially upon McMahon's authority. So far as appears, he was not expressy authorized to bind the company, and we cannot assent to the proposition that such authority may be implied from the fact that he was discharging the customary duties of secretary and of treasurer. And there was no evidence that he had been held out to any one as so empowered; nothing was proved, except that he was in charge of the company's office and accounts—as might be expected from a secretary and treasurer—attending to the correspondence, keeping the accounts, and receiving and paying out the money. If, with the company's knowledge and implied assent, he had been usurping the corporate powers, and had come to represent the company for most, if not for all, corporate purposes, this fact was not made to appear, and in the absence of evidence we must decline to accept the assertion of counsel on this subject. It is hardly necessary to add that, if he was not capable of binding the company by assenting to the assignment, he could not ratify his own unauthorized act, unless the company gave him power so to do. Woodruff v. Shimer (C. C. A. 3) 174 Fed. 584, 98 C. C. A. 430.

[4] Upon the other question, also, we cannot sustain the rulings at the trial. We do not pass upon the correctness of restricting the receiver's cross-examination of the bookkeeper. In any event, the ruling did no serious harm, for the receiver had a subsequent opportunity to go into the same subject when his turn came to be heard. But the opportunity was of no avail; the offers he made were excluded, and here we think a mistake was made. Assuming the "auxiliary ledger" to have been an official book of the company—and upon the evidence before us this seems to have been a fairly disputable point concerning which we think the jury should have received more definite instructions—it did not follow that the other books of the company might not throw important light upon the true state of the account, and if they did afford such help they should have been received and considered. The fact that some items sought to be proved may have been entered on what were formally the individual accounts of the contractors was not conclusive. On the record before us, the only transactions Markley & Miller had with the company grew out of their contract, and the appearance of some transactions in a seemingly individual account, while others appeared in a firm account, was open to explanation. In a word, the relations between the company and the contractors should have been thoroughly investigated, and for this purpose we think the books as a whole (speaking, of course, in general terms) were relevant.

[5] We are of opinion, also, that the court should have admitted the receiver's offer to prove admissions by Markley tending to show that the contract of October, 1904, had not been performed. The fact that these admissions were made in December, 1912, was not sufficient to exclude them. We are dealing, not with a situation where

Digitized by Google

the debtor had accepted the assignment, but with a situation where the acceptance itself was a matter of dispute, and where the performance of the contract, and therefore the existence of a fund, was also in controversy. It was essential to determine whether the company owed Markley & Miller anything, and, if so, how much—in other words, whether in August, 1911, Markley & Miller had any valuable right to assign. On this question the admission of Markley, that the original contract had not been performed, was evidence, and we do not see that its competency would be affected by the fact that it was made in 1912. Under the circumstances the right of the use plaintiff could not be greater than the right of the legal plaintiffs, although of course the probative value of the admissions might not be as great as if they had been made before the assignment was executed. The date of making them might be a reason for regarding them with caution, but it would not be sufficient to exclude them altogether. Certainly, if there was nothing of value to assign in August, 1911, the assignment had no effect, and upon this point Markley's admissions should have been received.

We need not take up the assignments of error in detail. We have said enough to indicate our opinion about the proper course of the trial, and enough, we hope, to be a sufficient guide when the controversy comes again before the District Court.

The judgment is reversed, and a new trial is awarded.

(249 Fed. 319)

In re JARMULOWSKY et al. Petition of WILSON. Petition of BORTZ.

(Circuit Court of Appeals, Second Circuit. January 16, 1918.)

Nos. 114, 115.

1. COURTS ⚷372(1)—FEDERAL COURTS—PRECEDENTS.
   On questions of general commercial law, the decisions of the state courts are not controlling in the federal courts, but the rules enunciated by the various national courts should be applied.

2. BANKS AND BANKING ⚷127—CHECKS—DEPOSITS.
   In the absence of any special agreement between the depositors and a bank, title to checks deposited will pass to the bank, and it becomes merely a debtor for the amount thereof.

3. BANKS AND BANKING ⚷159—DEPOSIT OF CHECKS—EFFECT.
   Whether there was any special agreement taking a deposit of checks out of the general rule, under which title would have passed to a bank and it would have become a debtor to the depositors for the amount thereof, is a question of fact.

4. BILLS AND NOTES ⚷188—INDORSEMENT—EFFECT.
   Where checks deposited were indorsed in blank, any lawful direction might be written over the blank indorsement.

5. BANKS AND BANKING ⚷165—COLLECTIONS—PROCEEDS.
   When a bank, collecting checks as agent for a depositor, gets the money on the checks, the relation of debtor and creditor arises.

⚷For other cases see same topic & KEY-NUMBER in all Key-Numbered Digests & Indexes

Digitized by Google

6. BANKS AND BANKING ⟹166(2)—DEPOSIT OF CHECKS—EFFECT.

Where their passbooks provided that deposits of checks should not be drawn upon until collected, the checks so deposited belonged to the depositors until collection, even though they were indorsed in blank and commercial depositors were allowed to draw on deposits of checks, for the banker might have written any lawful direction above the blank indorsement, and the privilege in favor of commercial depositors, which was without consideration, might have been withdrawn at any time; so, where the checks were not collected until after a receiver took charge of the affairs of the banker, the depositors were entitled to the proceeds as against the receiver.

Petitions to Revise Orders of the District Court of the United States for the Southern District of New York.

In the matter of the bankruptcy of Louis Jarmulowsky and Harry Jarmulowsky, doing business under the firm name and style of S. Jarmulowsky's Bank. The petitions of L. M. Wilson and Benjamin Bortz, which were opposed by Eugene Lamb Richards, as receiver in bankruptcy, were granted (243 Fed. 632), and the receiver petitions to revise. Affirmed.

The appellant in these causes, Mr. Richards, is at once superintendent of banks for the state of New York and receiver in bankruptcy of Jarmulowsky et al., who conducted business in New York City as bankers under the name of "S. Jarmulowsky's Bank." Pending these appeals adjudication has been entered, and for all practical purposes Mr. Richards may be regarded as the trustee in bankruptcy. On May 11, 1917, the superintendent of banks took possession of Jarmulowsky's Bank pursuant to the statutes of New York, because in his opinion there existed an impairment of capital and an insufficient reserve. On the same day a petition in bankruptcy was filed against the Jarmulowskys.

Quite as much from the admissions or statements of the parties as from a meager and ill-prepared record, we find that on May 10, 1917, Bortz deposited in the bank two checks, aggregating $304.90. One of these was plainly an out of town check; the other was apparently local—i. e., drawn against some bank in the city of New York. On the same May 10th Wilson similarly deposited two Philadelphia checks, aggregating $354. Both depositors indorsed their checks in blank and received credit (i. e., the checks were not entered "short") in their passbooks for the face of the checks, and both their passbooks contained the following notice: "Deposits of currency or coin may be drawn against after deposit, but deposits of checks shall not be drawn against until collected." The checks aforesaid, with many others, were by the Jarmulowskys redeposited to their own account in sundry chartered banks of this city, and all were in time duly collected; but (as is admitted) such collection had not been made when Mr. Richards, at the opening of business on May 11th, took possession of the bankrupts' bank.

The receiver introduced evidence to the effect that Bortz had a so-called "commercial" account with Jarmulowsky, and that as a depositor of that kind he had been permitted to draw against uncollected checks, notwithstanding the passbook notice aforesaid. As to Wilson, he introduced no such evidence. There is no other difference between the two causes; it being admitted that both as to Bortz and Wilson it was understood that the bank had perfect right to summarily charge back and against the depositor's account any check not collected on presentation, notwithstanding the apparent credit of the passbook or the privilege extended to commercial depositors like Bortz.

On these facts and admissions the District Court entered orders requiring Mr. Richards, as receiver, to pay over to the petitioners, respectively, what he had received out of the check collections above described, and thereupon the receiver took these appeals.

⟹For other cases see same topic & KEY-NUMBER in all Key-Numbered Digests & Indexes

Digitized by Google

Koenig, Goldsmith & Sittenfield, of New York City (Milton M. Sittenfield and Solomon Selig, both of New York City, of counsel), for Richards as receiver.

Virginius Victor Zipris, of New York City (Norman M. Behr, of New York City, of counsel), for Bortz and Wilson.

Before WARD, ROGERS, and HOUGH, Circuit Judges.

HOUGH, Circuit Judge (after stating the facts as above). [1] In this matter of general commercial law it is our duty to apply the rules enunciated by the Supreme and other courts of the United States; we are not controlled by state decisions. Railroad Co. v. National Bank, 102 U. S. 14, 26 L. Ed. 61, reaffirming Swift v. Tyson, 16 Pet. 1, 10 L. Ed. 865.

[2] In the absence of any special agreement between these depositors and their bank, the title to the checks would have passed to the bank, and the bank become merely a debtor to the depositor for the amount entered in the passbook. Burton v. United States, 196 U. S. 297, 25 Sup. Ct. 243, 49 L. Ed. 482, approving Cragie v. Hadley, 99 N. Y. 131, 1 N. E. 537, 52 Am. Rep. 9.

[3-6] Whether there was any other or special agreement made is a question of fact. St. Louis & San Francisco R. R. Co. v. Johnston, 133 U. S. 566, 10 Sup. Ct. 390, 33 L. Ed. 683. On the facts above stated the evidence making for an absolute ownership of the checks by the bankrupts is the entry of full credit in the passbook and the fact that the depositors indorsed in blank; but it is to be noted, as they did not indorse either, "For deposit" or "For collection," nor indorse specially, the Jarmulowskys might have written any lawful direction over the unrestricted signatures of the depositors. It is said, also, that in the case of Bortz the privilege of checking against such deposits as the one in question tends to show that the bankrupts became the absolute owners of the checks. On the other hand is the notice in the passbook which undoubtedly constituted part of the original contract between banker and depositor.

We regard the fact that the depositors' indorsements were in blank of no importance, since any indorsement (at least) consistent with the original intent of the parties might have been written thereover. Nor do we think the privilege said to have been extended to "commercial" depositors like Bortz affords any guide to decision. It was a privilege, a favor, without consideration; it could have been retracted at any time, and cannot, therefore, be held to show any change in the legal relation assumed by the parties when petitioners became depositors in bankrupts' institution.

Therefore both of these proceedings present the same question, which is whether a depositor who is credited with the face of checks, which he has agreed not to draw against until they shall have been collected, has by the act of deposit parted with the title to the checks in question or other such negotiable paper. It is obvious (and is indeed admitted) that unless there was such parting with title the relation of the bank to the depositor in respect of such collectible items is that of agent. Of course, if the agency had been fulfilled by collection of the checks be-

Digitized by Google

fore May 11th, no such question could be presented, for the moment the bank got money on the checks the relation of debtor and creditor arose. Goshorn v. Murray, 210 Fed. 880, 127 C. C. A. 464.

But here, when petition was filed and the bank superintendent took possession, the agency (if it existed) was terminated before collection effected, and the depositors can follow their own property or its proceeds wherever they can find it, in the absence of supervening superior rights. If these petitioners had indorsed their checks "For deposit" and received full credit therefor, the decision of Putnam, J., in Beal v. City of Somerville, 50 Fed. 647, 1 C. C. A. 598, 17 L. R. A. 291, would entirely cover the case. And it is our opinion that what the parties here meant was to create as to everything but cash the relation of principal and agent. This inference we draw from these undisputed facts: No depositor had any right (as distinct from an occasional and gratuitous privilege) to draw against anything but cash; this arrangement was advantageous to the bank; and the right to summarily charge back uncollected items, even after full apparent credit on deposit, is thought inconsistent with any intent on the bank's part to become the owner of such items as those under consideration.

We conclude, therefore, that the course of business shown herein is in effect the same as though the checks aforesaid had been specifically indorsed "For collection and deposit to the account of" the depositors. If this had been done, the situation would be too clear for argument. See Morse on Banking (5th Ed.) § 587.

The orders appealed from are therefore affirmed, with one bill of costs, to be taxed in the Case of Wilson.

(249 Fed. 822)

BARTLETT & KLING et al. v. DINGS et al.

(Circuit Court of Appeals, Eighth Circuit. February 23, 1918. Rehearing Denied May 29, 1918.)

No. 4944.

1. UNITED STATES ⟹67(3)—CONTRACTORS' BONDS—LIMITATIONS.
   The one-year limitations against actions on bonds required by Act Feb. 24, 1905, c. 778, 33 Stat. 811 (Comp. St. 1916, § 6923), of contractors performing work for the United States, begins to run from the time of settlement by the goverment with the contractors.

2. UNITED STATES ⟹67(1)—CONTRACTORS' BONDS—LIABILITY.
   The bond required by Act Feb. 24, 1905, of contractors performing work for the United States being intended not only to secure the government, but to protect third persons who may furnish labor or materials, an agreement between the contractor and a subcontractor, freeing the former from liability to laborers employed by or to those furnishing materials to the latter, is unavailing against the claims of such persons.

3. UNITED STATES ⟹67(3)—CONTRACTORS' BONDS—ACTION BY ASSIGNEE.
   The claims of laborers who performed services for a subcontractor on government work are assignable, and the assignee may recover therefor on the contractor's bond.

⟹For other cases see same topic & KEY-NUMBER in all Key-Numbered Digests & Indexes

Digitized by Google

4. UNITED STATES ⟹67(1)—CONTRACTORS' BONDS—LIMITATION OF LIABILITY.
A government contractor, required to give bond under Act Feb. 24, 1905, cannot escape liability to laborers employed by a subcontractor by posting notices that it would not be responsible to employés of the subcontractor.

5. UNITED STATES ⟹67(2)—CONTRACTORS' BONDS—INTEREST—ALLOWANCE—TIME.
Interest on sums due laborers employed by a subcontractor on government work is properly allowed from the date the assignee of such claims intervened in the proceedings by other creditors against the contractor and the surety on its bond, required by Act Feb. 24, 1905.

Appeal from the District Court of the United States for the Southern District of Iowa; Martin J. Wade, Judge.

Intervention by J. F. Dings and another in a suit by the United States, for the use and benefit of the American Radiator Company, against Bartlett & Kling, a corporation, and the Fidelity & Deposit Company of Maryland, a corporation, wherein interveners set up claims against defendants. From a judgment for interveners, defendants appeal. Affirmed.

C. L. Bartlett, of Cedar Rapids, Iowa, for appellants.

Before HOOK and SMITH, Circuit Judges, and TRIEBER, District Judge.

TRIEBER, District Judge. The appellant Bartlett & Kling had entered into a contract with the United States for the erection of a public building, and executed the bond required by the act of Congress of February 24, 1905 (33 Stat. 811, c. 778 [Comp. St. 1916, § 6923]) with the Fidelity & Deposit Company as its surety. Creditors of the contractor instituted suit against it and its surety for moneys due them for materials furnished and used in the erection of the building. The contractor had sublet a part of the work on the building to J. E. Gunder & Co., who became indebted, in the course of their work, to certain laborers employed by them in the erection of the building, which claims were assigned to appellees, who filed interventions in the main proceeding, setting up these facts.

The appellant in its answer denies all the allegations of indebtedness to appellees' assignors, and if the amounts claimed to be due these workmen were due and had been assigned to appellees, they still would not be entitled to be subrogated to the rights of said laborers. For a further defense it set up that said Gunder & Co., when they became subcontractors, had executed a bond to the principal contractor, with the appellees as sureties, whereby they assumed all liability and risk up to the time of final acceptance for all work and materials furnished, and to at all times keep free and clear from all liens and claims for said work and materials. For another defense the appellant pleaded that before and during the time when these workmen were employed by Gunder & Co. and performed the labor and work, as alleged in the intervention, it had posted in conspicuous places in, on, and around said building notices that all persons working on said building must look wholly for their pay to the parties by whom they were em-

⟹For other cases see same topic & KEY-NUMBER in all Key-Numbered Digests & Indexes

Digitized by Google

ployed, and that the employés of all subcontractors must look solely to said subcontractors for their pay, and that under no circumstances would Bartlett & Kling or any other parties be beholden to them for their pay. For further defense it set up that the work on the building had been completed prior to October, 1912, and that this intervention was not filed until October 17, 1913, more than one year after the completion of said work on the said contract.

By an amendment to the answer the appellant pleaded that the workmen, who assigned their claims to appellees, had all been paid by the subcontractors, and also pleads the fact that appellees were sureties on the bond of Gunder & Co. to hold the principal contractors harmless from all claims. There was a reply filed to these answers, in which it was alleged that the defendant Bartlett & Kling and J. E. Gunder & Co., through its receiver, had entered into a written stipulation, by which all claims of J. E. Gunder & Co., individually, against Bartlett & Kling, were compromised and settled, as well as all counterclaims of Bartlett & Kling against J. E. Gunder & Co. That among other stipulations was the following:

"'It is understood that this settlement is without prejudice to the claim of Frank L. Root and J. F. Dings on account of the wages claimed to have been paid as shown by their petition of intervention, and also without prejudice to the claim made in the petition of intervention filed in the federal court against the Bonding Company on account of the money said to have been paid on the receiver's certificates. As part consideration hereof, Bartlett & Kling agree that to the extent of any and all liability, if any, it may be held for in the United States District Court as to the American Radiator Company, and as to the alleged creditors of J. E. Gunder & Co. and of said receiver, and as to all of the interveners in said suit in the United States District Court, it shall not in any way or court or at any time look to or hold said J. E. Gunder & Co. or its said bond, or sureties on said bond, or the receiver, liable in any way for reimbursement or indemnity on account of Bartlett & Kling or the Bonding Company having to pay any or all of said intervenors or the plaintiff therein"

—which stipulation was approved by the court, which had appointed the receiver. Upon the hearing of the cause the court found the issues in favor of the interveners, and rendered judgment for the amount claimed, with interest from the date the intervention was filed.

[1] There is nothing in the record to show when the final settlement was made by the government for the building, nor when the original suit on the bond was instituted. The one-year statute of limitations begins to run from the time of settlement by the government with the contractors. This has been conclusively determined in Illinois Surety Co. v. Peeler, 240 U. S. 214, 218, 36 Sup. Ct. 321, 60 L. Ed. 609.

[2] The claim that by reason of the contract between appellant and Gunder & Co., the subcontractors, the appellant is not liable, is untenable, and cannot affect the materialmen and laborers. The act of Congress creates a direct liability on the surety to these persons. As was held by this court in United States v. National Surety Co., 92 Fed. 549, 34 C. C. A. 526, and followed in Equitable Surety Co. v. United States, 234 U. S. 448, 34 Sup. Ct. 803, 58 L. Ed. 1394:

"The bond which is provided for by the act was intended to perform a double function—in the first place, to secure to the government, as before, the faithful performance of all obligations which a contractor might assume towards

Digitized by Google

it; and, in the second place, to protect third persons from whom the contractor obtained materials or labor."

[3] The contention that the claims of laborers are not assignable is wholly untenable. United States Fidelity Co. v. Bartlett, 231 U. S. 237, 34 Sup. Ct. 88, 58 L. Ed. 200.

[4] The posting of notices by Bartlett & Kling that it would not be responsible to the employés for its subcontractors does not release it from liability. If that were permitted, the law would be a snare and a delusion, because every contractor would avail himself of it, and deprive the materialmen and laborers of the benefits of the act.

[5] The objection to the sufficiency of the evidence is without merit. The proof clearly established that these workmen performed the work, received their time checks or labor vouchers, and the evidence shows that the amounts were justly due them, and had not been paid.

There was no error in allowing interest from the date the intervention was filed. United States v. United States Fidelity Co., 236 U. S. 512, 35 Sup. Ct. 298, 59 L. Ed. 696; Illinois Surety Co. v. John Davis Co., 244 U. S. 376, 37 Sup. Ct. 614, 61 L. Ed. 1206.

Other alleged errors presented on behalf of appellant have received consideration and are without merit.

The court below committed no error, and its judgment is affirmed.

(249 Fed. 325)

SOUTHWESTERN GAS & ELECTRIC CO. v. THOMAS et ux.

(Circuit Court of Appeals, Fifth Circuit. February 11, 1918. Rehearing Denied March 11, 1918.)

No. 3057.

1. LANDLORD AND TENANT ⟹167(2)—DEFECTS—LIABILITY.

Where a street railway company conducted an amusement park for purpose of increasing its traffic, and as part of the park constructed a pool, it is liable for the death of one drowned as a result of structural defects in the pool, even though it leased the pool to one who for a small sum operated the same.

2. DEATH ⟹69—DEATH OF CHILD—MEASURE OF DAMAGES.

A recovery by parents for the wrongful death of their child is entirely compensatory, but the jury is permitted to take into consideration the capacity, the age, and disposition of the child, as well as the ages of the parents, and their physical and financial condition; hence, where it appeared that parents were unable to educate all of their children, but had educated the child for whose death they sought recovery, under an agreement that he should repay such advances, evidence of that transaction is admissible, though the agreement between the parents and their child was unenforceable as a contract.

3. DEATH ⟹99(3)—MEASURE OF DAMAGES.

An award of $5,000 in favor of parents for the wrongful death of their minor son 19 years of age, who had attended normal school, had almost finished the high school grades, and had been invited to teach one of the grades, at which occupation he would have earned from $85 to $90 per month, is not excessive;. it appearing that the parents, though they had a number of children, were unable to educate them all, and had educated the deceased under an agreement that he should repay the advances.

⟹For other cases see same topic & KEY-NUMBER in all Key-Numbered Digests & Indexes

Digitized by Google

In Error to the District Court of the United States for the Eastern District of Texas; Gordon Russell, Judge.

Action by Jake Thomas and wife against the Southwestern Gas & Electric Company. There was a judgment for plaintiffs, and defendant brings error. Affirmed.

John J. King, of Texarkana, Tex. (W. L. Estes, of Texarkana, Tex., on the brief), for plaintiff in error.

Hugh Carney, H. A. O'Neal, and E. A. Allday, all of Atlanta, Tex., for defendants in error.

Before WALKER and BATTS, Circuit Judges, and FOSTER, District Judge.

BATTS, Circuit Judge. Suit was by Jake Thomas and wife, defendants in error, against the Southwestern Gas & Electric Company, for damages for negligence resulting in the death of their son. It was alleged that defendant was operating a street railway system in Texarkana, Tex., and that, in connection therewith, it conducted a park to which the public was invited, and for entrance to which and to the various amusements therein, charges were made; that within the park was a swimming pool, an artificial body of water, constructed by defendant; that the son of plaintiffs, Henry Thomas, 19 years of age, went on defendant's line of railway to the park, and, paying the charges, entered the swimming pool; that while wading in the water the son was drowned, having plunged into water over his head on account of a step-off or sudden depression in the bottom of the pool, from three feet in depth to about seven feet; that at the place there was nothing to indicate the depression, and no ropes or buoys or safety appliances by which a person stepping off could rescue himself; that there was only one attendant in charge and no boats at hand, and no appliances for resuscitating persons. By a second count it was alleged that C. W. Greenblatt was, as servant of defendant or acting with defendant as a partner, or under a lease, engaged in the operation of the park, and charges of negligence were made against him, as well as the company. Greenblatt was made a party to the suit more than two years after the accident, and a plea of limitation by him was sustained.

[1] By the charge of the court the consideration of the jury in determining negligence was confined to such defects as they might find in the construction and maintenance of the lake; the charges with reference to the operation of the swimming pool were withdrawn from their consideration. The structural defects submitted were the sudden step-off or depression, the absence of signs and markers, and the absence of ropes and buoys, or other safety appliances. If these alleged defects were structural defects, the issues with reference to them were properly submitted.

It is quite possible that the charge of the court was more favorable to the defendant than the law requires. Instead of operating the swimming pool directly, the company made a temporary arrangement with Greenblatt by which, for a small sum, he operated the pool for its receipts. The pool, and the other amusements of the park, were op-

Digitized by Google

erated for the purpose of increasing the revenues of the street railway company from fares, rather than from the profits of the park. It is to be doubted if, by the arrangement made with Greenblatt, the company in any way relieved itself of liability for negligence in operation.

However this may be, the leaving of a step-off or depression in the pool, without indicating its presence, and without providing a way by which persons whose lives became thereby endangered might secure safety, must be regarded a structural defect, for which the owner was responsible. The company continuously invited the public to use the park, and offered the pool as a proper place in which to bathe. While an issue of fact was made with reference to the existence of the deep place in the pool, this issue was determined adversely to the defendant. No reason appears why defendant is not liable to plaintiffs for such compensatory damages as resulted from this negligence.

[2, 3] The trial court permitted testimony to be introduced to the effect that the young man who was drowned had, during his minority, made an agreement with his father to the effect that, if the father would send him to school, he would, after he became of age, repay the amount expended therefor. The evidence indicates that the father was a farmer, with a number of children, and that he was not in a position financially to educate all of them, and that, by reason of the arangement mentioned, advances were made to the deceased in excess of those to the other children. This arrangement between the father and son had no force as a contract, nor would the parties be permitted to recover the amount expended under its terms. A recovery by parents for negligent injury to the son, resulting in death, is entirely compensatory; the determination of the amount to be recovered is essentially difficult; complete accuracy is impossible. The jury is permitted to take into consideration the capacity, the age, and the disposition of the child, and the ages of the parents and their physical and financial condition, and any other fact which might be of value in throwing light upon the probable contribution of the child to his parents after he shall have reached his majority. The circumstances that these extraordinary advances had been made to the son, that he was an exceptionally capable young man, and that he had promised to repay his parents the amount expended for his education, are proper to be considered in connection with other evidence. The charge of the court is not susceptible of the construction that the jury was directed to return a verdict for the amount of these advances; they were merely authorized to consider the agreement and the advances made under it, as they were the other facts throwing light on this essentially difficult matter.

It is contended that the amount awarded, $5,000, is grossly excessive. The evidence is to the effect that the father was 52 years of age; that his wife, the mother, was 48 years of age; that the deceased son was an exceedingly capable young man; that he was helpful on the farm; that he had attended the normal school at Texarkana, and had almost finished the high school course at Atlanta; that he had been

Digitized by Google

invited to teach one of the grades; that he was physically able to work, and knew how and showed a willingness to labor; that he was a boy of good character and devoted to his mother; that as a teacher in the schools he could have earned $85 or $90 per month; that he had looked forward to a professional career, for which he was apparently well adapted. The amount awarded seems large, as compared to judgments in a number of other cases called to our attention; but it is not so entirely excessive as to warrant us in substituting our judgment for that of the jury and the trial judge.

The judgment is affirmed.

(249 Fed. 328)

PILSON v. UNITED STATES.

(Circuit Court of Appeals, Second Circuit. February 18, 1918.)

No. 155.

1. POST OFFICE ⚷48(2)—UNMAILABLE MATTER—INDICTMENT.
   An indictment, alleging that defendant, in violation of Criminal Code (Act March 4, 1909, c. 321) § 211, 35 Stat. 1129 (Comp. St. 1916, § 10381), deposited in the mails a letter and circular giving information where, how, and from whom and by what means contraconceptives might be obtained, which set forth the entire transaction in detail and the letter, but did not set forth the circular, with sufficient certainty advised defendant of the offense, and was not open to attack because not setting forth the circular in extenso, for defendant, if desirous, might have obtained a copy by application for bill of particulars.
2. CRIMINAL LAW ⚷1043(2)—APPEAL—OBJECTIONS—SUFFICIENCY.
   Though an indictment, charging that defendant deposited in the mails a letter and circular giving information as to the obtaining of contraconceptives, was attacked for lack of reasonable certainty, the objection that the circular was not set out in extenso was not raised, so as to justify review, since, if that was the basis of the objection, it should have been stated more definitely.
3. POST OFFICE ⚷49—OFFENSES—EVIDENCE—SUFFICIENCY.
   In a prosecution for violating Criminal Code, § 211, by depositing in the mails a letter and a circular giving information as to where, how, and from whom contraconceptives could be obtained, evidence *held* sufficient to warrant a conviction.
4. CRIMINAL LAW ⚷402(2)—EVIDENCE—SECONDARY EVIDENCE.
   Where defendant testified that in response to a subpæna duces tecum he had produced all correspondence before the grand jury and asserted that he did not receive decoy letters, in response to which it was contended he deposited in the mails nonmailable matter, secondary evidence of such decoy letters was properly received, though the government served no notice to produce.

In Error to the District Court of the United States for the Southern District of New York.

Joseph H. Pilson was convicted of violation of Criminal Code, § 211, by depositing in the mails a letter and circular giving information where, how, and from whom, and by what means, might be obtained articles intended for the prevention of conception, and he brings error. Affirmed.

⚷For other cases see same topic & KEY-NUMBER in all Key-Numbered Digests & Indexes

Digitized by Google

The indictment consisted of two counts, upon the first of which a verdict of not guilty was rendered, and the second of which alleged that the defendant upon a date stated unlawfully deposited, or caused to be deposited, nonmailable matter in a branch post office of the city of New York, the said matter consisting of a letter given in extenso and referring to a circular which gave information where, how, and from whom and by what means might be obtained articles intended for the prevention of conception and to produce abortion. Upon the trial it was proved that the defendant, a printer by trade, was the owner of 98 out of 100 shares of a New York corporation called "the Vital Fire Remedy Company." This corporation did business in the city of New York, and was under the general direction of the defendant, though the immediate charge of the business was under one Wright, who was employed by the defendant. Two decoy letters were sent to the Vital Fire Remedy Company by a post office inspector, requesting information concerning the sale of "Tansy Pills," which had been advertised by the corporation. The first letter stated that the subscriber was pregnant, could not afford any more children, and wished these pills to be relieved of her condition. Wright, in answer to this letter, signed and sent a letter, inclosing the circular for special treatment, and stating that it would explain what the writer asked. This circular did not directly refer to the prevention of conception, but stated that, if the Tansy Pills failed to establish normal conditions in the patient, a certain preparation of binoxide of manganese would prove effective where all remedies failed. In answer to this another decoy letter of similar import was written, inclosing $3.10 for a package of binoxide of manganese pills. This letter the defendant personally opened and cashed the money order. He also addressed a package of pills to the subscriber of the decoy letter.

The defendant in his defense swore that he had instructed Wright, in case of all correspondence of the sort in question, to refer the same to him and not to answer it; that he had never seen the letters, but had handed them over to Wright; that in the case of the second letter he had taken out the money order and cashed it without reading the letter; and that he had addressed the box of pills at the request of Wright, without knowing the purpose for which they were sent. The originals of the decoy letters were not produced upon the trial, but carbon copies were introduced in evidence in their stead. In order to lay a foundation for these, the government showed that a subpœna duces tecum had been served upon the corporation to produce before the grand jury all correspondence from persons asking for medicine, received at its office from January 1, 1913, until the day of the subpœna, on January 13, 1914, and that in response to such subpœna the defendant had appeared at the office of the district attorney and turned over some boxes of letters. The defendant's testimony upon this matter was as follows: "I produced all the letters that I had at that time. I brought them down to you" (the district attorney) "and gave them to you. I think you were at the grand jury room, which is upstairs." In an interview with a post office inspector the defendant denied ever having seen the originals of the carbon copies which were admitted in evidence.

The defendant's points are, first, that the second count was void for lack of reasonable certainty; second, that there was not sufficient evidence that the defendant had caused the letter to be sent; and, third, that the secondary evidence was improperly admitted.

Hyacinthe Ringrose, of New York City, for plaintiff in error.

Francis G. Caffey, U. S. Atty., of New York City (Julian Hartridge, Asst. U. S. Atty., of New York City, of counsel), for the United States.

Before WARD and HOUGH, Circuit Judges, and LEARNED HAND, District Judge.

LEARNED HAND, District Judge (after stating the facts as above). [1, 2] The crime laid in the second count was in mailing a

Digitized by Google

letter telling where, how, and from whom, and by what means, contraconceptives might be obtained. Criminal Code, § 211. The letter answering the first decoy was set forth ipsissimis verbis; so also was the signature at the end of the circular; but the circular itself was not. The circular stated that, if Tansy Pills were not efficacious, binoxide of manganese would serve, which the corporation would sell at $3.10. It was objected at the trial that "the indictment and its two counts fail to set forth with legal sufficiency and reasonable certainty any crime." The indictment surely set forth the crime with reasonable certainty; it advised the defendant of the place and time of mailing the letter; it set forth the letter in extenso and identified the circular beyond doubt. All the requirements of justice were answered; he knew what was the charge, and any judgment on the indictment would have been a good bar under the plea of autrefois acquit. Had he wished a copy of the circular, he might have applied for a bill of particulars; but the substance of the circular appears with sufficient clearness. The only objection was that the indictment was not legally sufficient, which raised no specific question, and did not advise the court of the particulars of the supposed insufficiency. We can see nothing in the indictment which could be challenged, except the failure to extend the circular upon the indictment itself. We do not find it necessary to pass upon that question, because, if that was in fact the basis of the objection, it should have been stated more definitely. No one from the objection could have known that the defendant complained of this omission; indeed, the precise point was not even taken in this court. We think that the objection was not sufficient to raise this question and that, as to the question it did raise, it was not well taken.

[3] There was ample ground to connect the defendant with Wright's act. He was in charge of the business; he opened the box in which the letters came and handed them over to Wright; he took the money order out of the second letter and cashed it, and wrote with his own hand the address to the pill box; and he swore that he had given Wright instructions not to answer any letters similar to the decoys. It was extremely unlikely that Wright, who had no motive to disobey such instructions, should have disregarded them, without bringing the decoy letters to him. It was most unlikely that the defendant should have cashed the money order, or addressed the pills, if he had not read the second letter, or, if he had read the second letter, that he had not authorized Wright to answer the first, on which the indictment was based. The jury was clearly entitled to infer from the character of the business and the nature of the circulars that it was a part of his plan to respond to requests of the sort contained in the decoy.

[4] The admission of secondary evidence of the decoys was justified. It is true that the government served no notice to produce, and, if there was reason to suppose that the letters were still in the possession of the defendant, this might be a valid objection to the admission of secondary evidence; but we have the defendant's own testimony that he had produced all the letters which corresponded

Digitized by Google

to the subpœna in January, 1914, and the subpœna covered the decoys. It makes no difference whether this subpœna was served in the preparation of an earlier indictment or not. Prima facie, the government was in possession of all the original letters which the defendant had. Furthermore, the defendant had told Noile (the post office inspector) before the trial that he had never seen the originals, and it must have been idle to give a notice to produce that which he had disclaimed ever receiving. The proper foundation for secondary evidence was therefore present. Briggs v. Hervey, 130 Mass. 186.

None of the exceptions seems to us valid, and the judgment is affirmed.

(249 Fed. 331)

BILLINGSLEY et al. v. UNITED STATES (two cases).

BILLINGSLEY v. UNITED STATES.

(Circuit Court of Appeals, Ninth Circuit. March 5, 1918. Rehearing Denied May 13, 1918.)

Nos. 3022-3024.

1. CRIMINAL LAW ⟹274, 1149—PLEAS—WITHDRAWAL.
   Granting leave to withdraw pleas of guilty and enter pleas of not guilty to an indictment is discretionary with the trial court, and its discretion is not reviewable.
2. CONSPIRACY ⟹28—OFFENSE—OVERT ACT.
   The offense of conspiracy to commit a crime may be consummated by the doing of some overt act to effectuate the purpose, although the crime be not actually committed.
3. CRIMINAL LAW ⟹59(1)—"PRINCIPAL."
   In view of Pen. Code (Act March 4, 1909, c. 321) § 332, 35 Stat. 1152 (Comp. St. 1916, § 10506), declaring that any one who aids, abets, counsels, or procures the commission of an offense is a principal, defendants, where they conspired with agents of a common carrier to violate section 238 (Comp. St. 1916, § 10408), making it an offense to knowingly deliver certain interstate shipments of intoxicants to any one other than the consignee, are indictable as principals, though they were not agents or employés of any railroad or common carrier.

In Error to the District Court of the United States for the Northern Division of the Western District of Washington; Jeremiah Neterer, Judge.

Logan Billingsley and Fred Billingsley pleaded guilty to an indictment charging conspiracy to violate Pen. Code, § 238 (Comp. St. 1916, § 10408), while Logan Billingsley, who, with others, was charged with conspiracy to violate Act Feb. 4, 1887, c. 104, 24 Stat. 379, entitled "An act to regulate commerce," pleaded guilty, as did both of the named defendants, to an indictment charging conspiracy to violate Pen. Code, § 238, and "An act to regulate commerce." Their motion for leave to withdraw their pleas of guilty and be permitted to enter pleas of not guilty having been denied (242 Fed. 330), the named defendants bring error. Affirmed.

⟹For other cases see same topic & KEY-NUMBER in all Key-Numbered Digests & Indexes

Digitized by Google

Bell & Hodge, of Seattle, Wash., for plaintiffs in error.

Clay Allen, U. S. Atty., of Seattle, Wash., and Clarence L. Reames, U. S. Atty., of Portland, Or.

Before GILBERT and HUNT, Circuit Judges, and WOLVERTON, District Judge.

WOLVERTON, District Judge. The three above-entitled cases, in which the Billingsleys, one or both, were defendants below, may be considered together. In the first, Logan and Fred Billingsley were charged with conspiracy to violate section 238 of the Penal Code (Comp. St. 1916, § 10408). Both pleaded guilty. In the second, Logan Billingsley, with others, was charged in two counts with conspiracy to violate the act of Congress approved February 4, 1887 (24 Stat. 379, c. 104), entitled "An act to regulate commerce." Billingsley pleaded guilty to count 1 of the indictment. In the third, the Billingsleys were indicted by three counts. In two of the counts they were charged with conspiracy to violate section 238 of the Penal Code, and in the other count with conspiracy to violate the act to regulate commerce. Both these defendants pleaded guilty to all three of the counts. Subsequently the Billingsleys moved the court for leave to withdraw their pleas of guilty, and to be permitted to enter pleas of not guilty. The motion in each case was denied, and exceptions were saved. A writ of error in each case is now prosecuted to this court, on the grounds, first, that the court committed error in denying the motion for leave to withdraw the pleas of not guilty; and, second, that the indictment does not state facts sufficient to constitute an offense against the government.

[1] As to the first assignment of error, the law is settled in this court contrary to defendants' contention. Andrews v. United States, 224 Fed. 418, 139 C. C. A. 646. The matter of granting leave to withdraw the pleas of guilty was one discretionary with the trial court, and is not reviewable. It may be added here, however, that the record shows nothing but the bare motions for leave to withdraw the pleas of guilty. There were no affidavits filed, nor other showing made, in support of them, and there is absolutely nothing here to indicate in the smallest particular that the trial court abused its discretion in denying the motions. The assignment of error is therefore wholly without merit.

[2, 3] As it respects the sufficiency of the indictments, it is urged that they are defective, as related to the alleged conspiracy to violate section 238 of the Penal Code, because they do not show, nor attempt to show, that the defendants were, or at any time had been, officers, agents, or employés of any railroad company, or other common carrier, engaged in interstate commerce.

Section 238 denounces the act of any officer, agent, or employé of any railroad company, express company, or common carrier in doing the things there interdicted. The thought must not be lost sight of that the indictments are for conspiracy to commit an offense, not for committing the offense itself. We must look, therefore, to the statute defining conspiracy for the purpose of ascertaining whether the

Digitized by Google

indictments state facts essential to constitute that particular offense. It is unnecessary to state the elements essential to a conspiracy under the statute. They are so well known that it would be a work of supererogation to do so. Any person who aids, abets, counsels, commands, induces, or procures the commission of an offense against the United States is a principal, and may be so charged. Section 332, Penal Code (Comp. St. 1916, § 10506).

William H. Pielow and William Frazier are charged along with the Billingsleys as co-conspirators. Pielow was an officer, agent, and employé of a transfer company, or common carrier, and Frazier was also an employé of a transfer company, which companies had a part in the transportation of intoxicating liquors unlawfully brought into the state of Washington from the state of California. So it may be seen that the Billingsleys were at least aiding and abetting in the unlawful transportation of intoxicants into the state of Washington. While the Billingsleys were not officers or employés of a common carrier, they conspired with such officers to commit the offense denounced by the Penal Code. It makes no difference whether the offense was actually committed or not; the conspiracy may, nevertheless, have been committed by the doing of some overt act to effectuate its purpose. There is no reason why a person not an officer may not conspire with an officer to commit the offense, or even why two persons not officers may not conspire to cause the offense to be committed, by prevailing upon officers to do the acts constituting the offense. In this way the conspiracy statute would be transgressed, even if the offense designed to be committed were not actually accomplished. But, if it were accomplished, it would be by the connivance and inducement of the co-conspirators not officers or employés of the common carriers. Being principals, the Billingsleys were indictable along with the officers and employés engaged with them in the common purpose. We hold, therefore, that the indictments are sufficient. For cases of analogy, see United States v. Cohn et al. (C. C.) 142 Fed. 983, and Steigman v. United States, 220 Fed. 63, 135 C. C. A. 131.

Affirmed.

(249 Fed. 333)

In re FRANKLIN BREWING CO.

Petitions of PEOPLE'S TRUST CO.

(Circuit Court of Appeals, Second Circuit. January 29, 1918.)

Nos. 68, 101.

1. BANKRUPTCY ⟹262(3)—POWERS OF COURT—SALE OF PROPERTY—LIENS.

A court of bankruptcy has power to order the sale of any property of a bankrupt free of liens, and to transfer the same to the proceeds; and while it is good practice, and usual, not to order such sales unless there is a fair prospect that the proceeds will at least discharge the lien, this is not a rule of law, and in special cases, as where the validity of

---

⟹For other cases see same topic & KEY-NUMBER in all Key-Numbered Digests & Indexes

Digitized by Google

the lien itself is in litigation, and the property is wasting while waiting decision, it is a matter within the discretion of the court to sell it and save expense.

2. BANKRUPTCY ⟹262(3)—POWERS OF COURT—SALE OF PROPERTY.
A clause, in a mortgage securing bonds, giving the holders the right to bid on their bonds at any foreclosure sale, does not in any way limit the power of a court of bankruptcy to sell the property free from lien.

3. CONSTITUTIONAL LAW ⟹163—IMPAIRING OBLIGATION OF CONTRACTS——BANKRUPTCY ACT.
Congress, in the exercise of its constitutional power to establish systems of bankruptcy, may, and in fact always does, impair the obligation of contracts.

4. BANKRUPTCY ⟹262(1)—POWERS OF COURT—SALE OF PROPERTY.
Where the property of a bankrupt consisted of both personalty and realty, together constituting and operated as a brewery, and which had been mortgaged as such, it was error for the court to confirm a sale free of lien of the personalty only, leaving unsold the realty, which was also included in the order of sale, thus destroying the business entity of the mortgaged property.

Petitions to Revise Order of the District Court of the United States for the Eastern District of New York.

In the matter of the Franklin Brewing Company, bankrupt. On petitions of the People's Trust Company to review two orders of the District Court. First order affirmed, and the second reversed.

The first order directed certain property of the bankrupt to be sold free and clear of the lien of a mortgage; the second confirmed a sale (pursuant to the first order) of the mortgaged personalty, separated and sundered from the realty, the attempted sale of which was set aside. The bankrupt corporation had made a mortgage to a trustee, creating a lien upon existing and after-acquired property, which property, taking realty and personalty together, constituted a brewery. The mortgage secured a considerable issue of bonds, and contained provisions specifically authorizing holders to bid on their bonds at any foreclosure sale. When bankruptcy arose, there had been no foreclosure, nor was any suit pending therefor, the mortgaged property came into the physical possession of the receiver and (afterwards) the trustees in bankruptcy, and so remained when the orders complained of were made.

The designed effect of the lower court's procedure was to prevent foreclosure, or the use of bonds in bidding in the manner provided in the mortgage. Bondholders were offered the right to use their bonds up to a large percentage of any bid, subject to subsequent ascertainment of their validity. This they declined. Before any order made, the trustee in bankruptcy had instituted plenary suit, alleging the invalidity of the mortgage, and of all the bonds issued thereunder, praying that their nullity be decreed and the mortgaged property declared part of the estate in bankruptcy, freed of the mortgaged lien. The sale produced, as was probably expected, much less than the face of the mortgage bond. The trustee under the mortgage took these petitions.

Henry F. Cochrane, of Brooklyn, N. Y., for petitioner.

Samuel E. Maires, of Brooklyn, N. Y., for trustee in bankruptcy.

Before WARD, ROGERS, and HOUGH, Circuit Judges.

HOUGH, Circuit Judge (after stating the facts as above). [1] The questions raised as to the order for sale free and clear are suggested by the fact that when order made there was no reasonable likelihood that the mortgaged property would produce, or nearly so, the amount

⟹For other cases see same topic & KEY-NUMBER in all Key-Numbered Digests & Indexes

Digitized by Google

of a lien whose validity and existence was denied. It is said that such an order was unlawful.

We have recognized the power of the court sitting in bankruptcy to sell free and clear of liens, and transfer the same to the proceeds of sale (Re Kohl-Hepp Brick Co., 176 Fed. 340, 100 C. C. A. 260; Re Haywood Wagon Co., 219 Fed. 655, 135 C. C. A. 391), agreeing with earlier considerations of the same question in the First Circuit (Re Union Trust Co., 122 Fed. 937, 59 C. C. A. 461; Re Shoe & Leather Reporter, 129 Fed. 588, 64 C. C. A. 156). It is good practice, and the usual procedure in this circuit, not to order such sales unless there is a fair prospect that the proceeds will at least discharge the lien. Cf. Re Fayetteville Wagon, etc., Co. (D. C.) 197 Fed. 180; Re Saxton Furnace Co. (D. C.) 136 Fed. 697; Re Pittelkow (D. C.) 92 Fed. 901; and (under an earlier Act) Re Taliaferro, Fed. Cas. No. 13,736.

[2] The reason, or one very good reason, for this forbearance, is that, unless more is produced by sale than the lien debt, there is nothing coming to the estate in bankruptcy; therefore the bankruptcy court does not meddle with what it can never administer. But this is not a rule of law, and where (for instance) the very existence of any lien is in litigation, and property is wasting while waiting decision, it must be matter of discretion whether or not to sell promptly and save expense. Nor does a mortgage clause giving the right to bid on bonds in any way limit the power of the court, however much it may influence its discretionary application.

[3] Congress, in the exercise of its constitutional right to establish systems of bankruptcy, may, and indeed always does, impair the obligation of contracts; a doctrine going much further than this point requires. Mitchell v. Clark, 110 U. S. at page 643, 4 Sup. Ct. 170, 312, 28 L. Ed. 279; Canada, etc., Ry. v. Gebhard, 109 U. S. at page 539, 3 Sup. Ct. 363, 27 L. Ed. 1020. Therefore we find in the order directing sale free of lien nothing unlawful, nor any abuse of discretion amounting to error of law, which is the only error available here upon a petition to revise. There was a drastic exercise of authority, but no intimation is intended that circumstances might not justify it as matter of discretion.

In Re Roger Brown & Co., 196 Fed. 758, 116 C. C. A. 386, it seems to be regarded as legal error to order sale, unless there is reasonable expectation of a surplus over lien, citing as authority the cases from the First circuit above given. No such limitation can be found in them; on the contrary, the same court held (In re Loveland, 155 Fed. 838, 84 C. C. A. 72) that bankruptcy had jurisdictional power to order such sale, without "first determining either the validity or amount of the lien." We agree with that ruling, which covers the present situation.

[4] But what was ordered to sale free of lien was what had been mortgaged, and that was a brewery, something made up of property both real and personal, and constituting a business entity, which in its entirety had been hypothecated by an agreement good until set aside by competent authority. The effect of confirming a sale of personalty and leaving the realty unsold was to destroy the brewery and (vary-

Digitized by Google

ing the expressed intent of the order of sale) substantially subtract from the mortgaged property a part only, and sell that alone. If such an order had been made in the first place, it would have been unlawful, because (if for no other reason) no conceivable discretion could have advised it under the circumstances admitted. We perceive no difference between ordering such a sale, and producing it by a partial confirmation.

The petition complaining of the order for sale is dismissed, and order approved; that assigning for error sale of personalty only is sustained, the sale set aside, and the matter remanded, with directions to proceed in any manner not inconsistent with this opinion. There will be no costs in this court.

(249 Fed. 336)

HAMMER v. UNITED STATES.

(Circuit Court of Appeals, Second Circuit. March 13, 1918.)

No. 189.

1. SALES ⟹61—CONTRACTS—PASSAGE OF TITLE.
   In case of a controversy as to whether an agreement was a sale, under which title passed, or whether it was only an executory contract, the question is one of intention, to be ascertained from the actions of the parties.
2. POISONS ⟹4—SALE OF NARCOTICS—CONSUMMATION—DELIVERY.
   Where the parties had agreed on all the terms of a sale of narcotic drugs in violation of Harrison Act Dec. 17, 1914, c. 1, 38 Stat. 785 (Comp. St. 1916, §§ 6287g–6287q), and nothing remained to be done, except that at delivery payment should be made, the sale was completed, for, as at common law mutual assent of the parties was sufficient to validate a sale of personalty, title passes where nothing but payment by the buyer remains, though the seller retains possession until payment.
3. CRIMINAL LAW ⟹369(1)—EVIDENCE—OTHER OFFENSES.
   In a prosecution for an unlawful sale of narcotics, in violation of the Harrison Act, which occurred at a point far distant from defendant's residence, evidence that defendant was engaged in the business of dispensing narcotics at his residence is admissible, and not subject to attack as disclosing other offenses; it appearing that defendant was a licensed dealer, and that other consignments of narcotics, save the one furnishing the basis for the prosecution, were lawfully ordered and delivered.

In Error to the District Court of the United States for the Southern District of New York.

Riley C. Hammer was convicted under the Harrison Act of an illegal sale of narcotics, and he brings error. Affirmed.

The indictment was under the Harrison Act (Act Dec. 17, 1914, §§ 1, 2, and 9), and so far as here material charged that Hammer had, within the Southern district of New York, "sold, bartered, and given away" to one Fowle a quantity of the drugs forbidden by the statute; such sale, barter, and giving away having been made "not in pursuance to a written order of the persons to whom" the said drugs were sold, bartered, and given away.

It was shown that Hammer did business in Tampa, Fla., and there conducted a "Medical Institute" frequented by persons described as "dopers and patients that were sick," that he had registered in the proper internal revenue

---

⟹For other cases see same topic & KEY-NUMBER in all Key-Numbered Digests & Indexes

Digitized by Google

collector's office in Florida as a dealer in narcotics, that one Rogers, under the name of Gray, was connected with Hammer's business and shipped narcotics, and especially the consignment thereof which gave rise to this indictment, and that one Peak, a drug addict, had, while at Tampa, come to know Hammer's "Institute" and had purchased drugs there.

Peak became an informer, and arranged with Fowle, a revenue agent, the following transaction: He (Peak) communicated with Hammer, asserting that he had a customer in New York for a quantity of drugs, and would act as agent for a commission. Hammer agreed, stating in substance that he could supply what was wanted up to almost any limit. Thereupon Rogers and Hammer, in Tampa, put drugs, of which the sale price was to be $1,750, in a package and sent it by express to Peak in New York C. O. D., and Hammer himself at once started for that city to oversee the matter.

Peak met him at the station, together they went to a hotel, and there Fowle was introduced as the buyer, and with him Hammer discussed drug sales and stated definitely the amount then in the express company's care. Fowle said he wanted that and more, and the three men arranged to meet the next morning, go to the express office, get the drugs, and pay the money. They met accordingly, Hammer and Peak identified themselves as shipper and consignee respectively, Hammer gave Peak a check for the latter's commission, the express clerk was in substance directed to deliver the drug package to Fowle on receiving the money, and Fowle began to count out money, when other agents in waiting stepped up, arrested Hammer, and seized the drugs.

Hammer was convicted, the trial court charging: "If the parties had agreed on all the terms, and nothing remained to be done, except that at delivery the payment should be made, at the time of the delivery, and all that they intended was that Hammer should have a right to withhold the goods until he got the money, if that was the sum and substance of the contract, then the sale was completed when that contract was made. But if you find that they intended, in addition to those terms, that Hammer should have the right, not only to retain possession until payment, but should retain title to the property, then there was no sale until the payment was made."

The assignments of error substantially assert (1) that no sale was made; and (2) it was error to permit the jury to learn of transactions in Tampa, and especially anything of the nature of defendant's business there.

Charles H. Griffiths and Raymond H. Sarfaty, both of New York City, for plaintiff in error.

Francis D. Caffey, U. S. Atty., and John C. Knox, Asst. U. S. Atty., both of New York City.

Before WARD, ROGERS, and HOUGH, Circuit Judges.

HOUGH, Circuit Judge (after stating the facts as above). [1, 2] 1. The contention of plaintiff in error is that there was no actual sale, but merely an agreement to sell. Doubtless there is often difficulty in determining into which category the transaction falls, as was said in the Elgee Cotton Cases, 22 Wall. 187, 22 L. Ed. 863. But there is no doubt that at common law mutual assent of the parties was enough to validate a sale of personalty. If by the agreement the property passed, the "bargain and sale" was complete. It was and is only if the passage of the property (i. e., the title) is to occur in the future, or on conditions inconsistent with immediate transfer, that the contract is executory. Hatch v. Oil Co., 100 U. S. at page 130, 25 L. Ed. 554. And when controversy arises, as here, as to the true character of the agreement, the question is one of intention; the general rule being that the agreement is "just what the parties intended to make it." 100 U. S. 131, 25 L. Ed. 554.

Digitized by Google

But such intent is to be collected from what the parties did, and in this instance it is to be remembered that we are not concerned with the rights of creditors or other third parties; the inquiry is only whether as between Hammer and Fowle the sale was completed. It is contended that the method of shipment conclusively negatives the intent found by the jury under the instruction quoted above. But, as was held in Simmons v. Swift, 5 B. & C. 857, if the bargain is made, and nothing remains to be done to the goods, though the buyer cannot take them away without paying the price, "property passes immediately," and this was distinctly approved in the Hatch Case, supra, 100 U. S. at page 132, 25 L. Ed. 554.

As the jury were plainly told to decide whether it was intended that Hammer should withhold possession only, or withhold title also, until payment made, we think the instruction exactly right.

[3] 2. The plaintiff in error asserts that, by permitting the nature of Hammer's Tampa business to be shown, the rule laid down by *this* court in Marshall v. United States, 197 Fed. 513, 117 C. C. A. 65, was violated. The transaction which resulted in a sale in New York began in Tampa; it could not be understood, without a knowledge of what was done there in respect of this particular shipment, and of Peak's relations with the Institute. If such evidence of the whole transaction was injurious to the accused, it was the fault of relevant facts of his own making. The Marshall Case states the impropriety of proving "offenses" other than the one charged in the indictment, and confines the ruling to the "facts in the case in hand." We discover no proof of other offenses. Hammer was licensed, and Rogers was a doctor; non constat that what Rogers distributed (other than the present consignment) was lawfully ordered and delivered.

Judgment affirmed.

(249 Fed. 338)

WEST INDIA S. S. CO. v. CHICAGO HOUSE WRECKING CO.

(Circuit Court of Appeals, Second Circuit. February 20, 1918.)

No. 64.

1. SHIPPING ⟹104—CONTRACTS—REDUCTION TO WRITING.

Where the parties orally agreed upon a contract of affreightment by water, intending that a written contract should be drawn up, the oral contract was binding, the parties having acted upon it, and it appearing from the forms prepared by each party that there was a meeting of the minds on every material term; and neither party had the right, in preparing a written form, to introduce a new provision in the contract.

2. SHIPPING ⟹153—FREIGHT—ACTIONS—EVIDENCE.

Evidence *held* to sustain libelant's contention that a shipment was transported pursuant to a contract of affreightment previously entered into between the parties, and not under an independent engagement.

Appeal from the District Court of the United States for the Southern District of New York.

⟹For other cases see same topic & KEY-NUMBER in all Key-Numbered Digests & Indexes

Digitized by Google

Libel by the West India Steamship Company against the Chicago House Wrecking Company. From a decree for respondent, libelant appeals. Reversed, with directions.

R. J. M. Bullowa, of New York City (Ferdinand E. M. Bullowa, of New York City, of counsel), for appellant.

Henry J. Mayer, of New York City (Henry B. Gayley, of New York City, of counsel), for appellee.

Before WARD and ROGERS, Circuit Judges, and LEARNED HAND, District Judge.

WARD, Circuit Judge. The Chicago House Wrecking Company having about 18,450 tons of scrap iron to be shipped from Colon, Panama, to the United States, employed one Elliott, a ship broker, to engage freight room therefor. Elliott introduced Harris, president of the Chicago Company, to the libelant, the West India Steamship Company. August 26, 1914, a meeting was had at which terms were discussed, but no agreement arrived at. The scrap iron to be moved was specified, all being large pieces, easily handled, for which a rate of freight lower than that charged for small miscellaneous scrap would be reasonable. The principal difference between the parties was as to the amount of freight rate. August 29th they met again, when the rate of $3.15 a ton was agreed on, as were also the quantity and specific kind of scrap iron to be carried, the times of shipment from Colon, the rate of loading and discharging, the party to do the loading and discharging, the port or ports of discharge, and the demurrage. It was intended that a written contract should be drawn between the libelant and Elliott, who was to be named in it, instead of the Chicago Company, at the request of that company; but this was never done, because the Chicago Company refused to sign the form prepared by the libelant and the libelant refused to sign either of two successive forms prepared by the attorney for the Chicago Company. The reason why the libelant refused to sign the latter was that the Chicago Company wished to insert in the written contract, after the description of the 18,450 tons of scrap, a provision in one of the following forms: "And such other material as owned by the charterer," or with "option of shipping up to 1,000 tons of miscellaneous scrap iron," or "and such iron and steel owned by the charterer and not specifically mentioned." These were matters not agreed upon nor even mentioned at the meeting of August 29th.

[1] The District Judge held that the contract, if orally agreed upon, would be enforceable, notwithstanding it had not been put into writing as contemplated; but he held that the minds of the parties had not met, and for this reason dismissed the libel. We think they had met upon every material term. If the form prepared by the libelant be compared with the two forms prepared by the Chicago Company, it will be seen that there was no substantial difference whatever, except as to the provision above mentioned. Neither of the parties, after the meeting of August 29th, had a right to insert a new provision in the contract. Sanders v. P. B. F. Co., 144 N. Y. 209, 39 N. E. 75, 29 L. R. A. 431, 43 Am. St. Rep. 757.

Digitized by Google

[2] September 14th the libelant sent the steamer Meridian to Colon, where she loaded a cargo of small miscellaneous scrap known as "American scrap," and sailed to Philadelphia, arriving October 26th. There is a dispute between the parties whether this engagement was an independent one, as the Chicago Company claims, or whether it was carried under the contract of August 29th for 18,450 tons of what is known as "French scrap." The fact that the bill of lading stated the freight to be "according to contract with West India Steamship Company," and that the freight which both parties agreed was $3.15 a ton, the same as that called for in the case of the 18,450 tons, is some indication that the shipment was under that contract. On the other hand, the fact that the scrap was of a different character is an indication to the contrary. The libelant explains taking the same rate of freight for this small stuff by saying that it did not know what scrap was loaded on the Meridian until the arrival of the steamer at Philadelphia. This might well be, as it was only the time charterer of the steamer. However, the testimony of Elliott, the broker, that but one contract was made or talked about, and that was for 18,450 tons of French scrap, convinces us that the libelant's account is true. As we have found that to be an enforceable contract, the Chicago Company is not likely to complain because its liability would be increased by holding that the Meridian's cargo was carried under a different and independent contract.

The Chicago Company, finding that it could not load its steamers in the time originally agreed upon, wanted at the end of September to delay the shipments from Panama until early in 1918, and, this failing, because the libelant needed its steamers then for the sugar season, wanted to cancel the balance of the contract, negotiations which seem to us plainly to recognize the existence of the contract. October 1 the libelant advised Elliott that it had declared the steamer Argo for the next cargo to be ready to load at Colon October 12th. He replied that he thought the date was too early. Receiving no further instructions, the Argo went to Colon, whereupon the Chicago Company advised the libelant that other employment should be sought for the steamer, because it would not be able to load.

October 21st the libelant declared the steamer Evanger to load at Colon on or about November 2d, and following her the Guildhall, to load on or about November 15th, and following her the steamer Berlin. This brought about a telephone conversation with a new attorney for the Chicago Company, who told the libelant that his client would not load these steamers, and that it had better get the best employment for them possible with a view to reducing the loss, but at the same time saying that the Chicago Company did not admit that any contract had been entered into. This was the first repudiation of the contract by the Chicago Company. Down to that time there had been correspondence and negotiations between the parties consistent only with the existence of the contract.

The decree is reversed, and the court below directed to enter a decree in favor of the libelant, with the usual order of reference.

Digitized by Google

(249 Fed. 341)

In re NEWMARK.

(Circuit Court of Appeals, Second Circuit. January 16, 1918.)

No. 117.

1. BANKRUPTCY ⟹414(3) — DISCHARGE — CONCEALMENT OF PROPERTY — EVIDENCE.

Evidence *held* insufficient to show that a bankrupt's wife held in trust for him a lease delivered to her by a corporation in which the bankrupt was a stockholder, and so a discharge could not be denied on the ground the bankrupt had concealed and failed to turn over to his trustee such lease.

2. BANKRUPTCY ⟹413(7)—DISCHARGE—DENIAL.

Discharge is a statutory matter, and the court, as well as an objecting creditor, is confined to the specifications of objection.

Appeal from the District Court of the United States for the Southern District of New York.

In the matter of the bankruptcy of Charles Newmark. From an order granting a discharge to the bankrupt, Anton Larson & Son, Incorporated, an objecting creditor, appeals. Affirmed.

Newmark was a large shareholder in Newmark & Davis, Incorporated, a corporation which owned a heavily mortgaged apartment house. In it one apartment was finished to the taste of Mrs. Newmark, and the corporation executed and delivered to her a lease of that apartment for three years at $1 a month, with the privilege of subletting. She never occupied the apartment, but sublet it at $137.50 per month. This occurred in 1914, and in the same year the rents of the apartment house were assigned to the holder of the first mortgage, who apparently took possession; but Newmark and his fellow shareholder, Davis, continued to act as agents in collecting rent and superintending the house until about September, 1915. Mrs. Newmark never gave any consideration for the lease, nor did she ever pay the $1 per month rent. Her subtenant paid his rent by checks to the order of Newmark & Davis, Incorporated. Such checks were received by Newmark, who cashed some of them, but, as he testified, turned the proceeds over to his wife, who declared that she got all her subtenant's rent and used it for various purposes, including the maintenance of a home where her husband lived with her.

In 1916 Newmark was adjudicated a bankrupt upon his own petition, and when he applied for discharge this appellant objected that he had "concealed" and "failed to turn over" to his trustee the above lease made to his wife; it being alleged that the same was "held in trust for him" by her. The District Court granted discharge, and the objecting creditor took this appeal.

Ferdinand E. M. Bullowa, of New York City (Lawrence E. Brown, of New York City, of counsel), for appellant.

Jacob R. Schiff, of New York City, for appellee.

Before WARD, ROGERS, and HOUGH, Circuit Judges.

HOUGH, Circuit Judge (after stating the facts as above). [1] Mrs. Newmark's lease was created nearly two years before this bankruptcy. For all that this record shows, Newmark was solvent in 1914; and while we may be sure that Newmark & Davis, Incorporated, was not then prosperous, there is no evidence that the corporation was insolvent at the time. But let it be assumed that the gift of a three-year lease from the corporation to Mrs. Newmark was a fraud upon

Digitized by Google

its creditors, or upon the corporation itself, it is also true the persons injured are not before us. The single question in this case is whether the bankrupt, when he filed petition, individually owned the lease, and consequently concealed and kept from his individual creditors that piece of unscheduled property.

The position of objecting creditor would be much stronger if the wife had been the recipient of anything that ever belonged to her husband; but Newmark never owned this apartment house, and, however dishonorable was his conduct in procuring such a gift from a concern that had in effect mortgaged even the rents of the building, the very absence of morals revealed by the admitted transaction renders it unlikely that Mrs. Newmark was a trustee for him. The ordinary cunning of dishonesty would suggest that the husband have nothing to do with what (as she testified) his wife had asked for. It is not necessary for the bankrupt to insist that suspicion is not proof; we do not suspect him of owning it, nor even of wanting it, for all that he needed was to keep on good terms with his wife, so that she would permit him to live with her in, or on the proceeds of, the apartment she desired.

[2] Discharge is a statutory matter. The court, as well as the objecting creditors, is confined to the specifications of objection. Those specifications must be affirmatively proved, and the one before us contains nothing but the assertion that Newmark owns the lease. We think the proof is the other way, and that the case is even clearer than In re Dauchy, 130 Fed. 532, 65 C. C. A. 78, and In re Hammerstein, 189 Fed. 37, 110 C. C. A. 472, where we were compelled to grant discharges under circumstances not similar, but suggestive.

Order affirmed, without costs.

(249 Fed. 342)

In re CHAVKIN et al.

(Circuit Court of Appeals, Second Circuit. January 16, 1918.)

No. 93.

1. BANKRUPTCY ⟹303(2)—PROCEEDING BY TRUSTEE TO REQUIRE SURRENDER OF PROPERTY—EVIDENCE—FINANCIAL STATEMENT.

   On the hearing of the petition of a trustee to require bankrupts, who were partners, to turn over property not scheduled, a written financial statement, signed by one of the firm, made a short time before the bankruptcy to a creditor as a basis of credit, and purporting to show a surplus of assets over liabilities, is admissible in evidence, and, although not conclusive, may be persuasive.

2. BANKRUPTCY ⟹303(1)—PROCEEDING TO REQUIRE BANKRUPT TO TURN OVER PROPERTY—BURDEN OF PROOF.

   When a trustee lays a foundation by any competent evidence, including the claims of bankrupts themselves, that they had unscheduled assets within a reasonable time before the filing of the petition, the bankrupts must then account for the property, or rebut the trustee's prima facie case by credible evidence.

⟹For other cases see same topic & KEY-NUMBER in all Key-Numbered Digests & Indexes

Digitized by Google

3. BANKRUPTCY ⟹303(3)—ORDER REQUIRING BANKRUPTS TO TURN OVER PROPERTY—PETITION TO REVIEW.

An order requiring bankrupts to turn over property *held* supported by evidence, on a petition to revise such order in matter of law.

Petition to Revise Order of the District Court of the United States for the Eastern District of New York.

In the matter of Joseph Chavkin, Barnet Chavkin, Nathan Chavkin, David Chavkin, and Benjamin Chavkin, trading as the North Central Knitting Mills and as R. Chavkin & Sons, bankrupts. On petition of bankrupts to review an order of the District Court requiring them to turn over property. Affirmed.

The partners in the bankrupt firm were five brothers, and a sister was the bookkeeper. After an examination under section 21a of the Bankruptcy Act (Comp. St. 1916, § 9605), and at the first meeting of creditors, the trustee petitioned for an order against the bankrupts requiring them to pay over to him property, or the value thereof, neither scheduled nor surrendered. The evidence for the trustee in this proceeding consisted of (in part) a "financial statement," made March 25, 1916, signed by the bankrupt Joseph Chavkin, showing a net surplus of firm assets of over $60,000 and certified as "a true and correct showing of the present financial condition of" the bankrupts, made to a creditor "for the purpose of purchasing goods and for establishing a continuing line of credit" with said creditor. The trustee also introduced in evidence the examination, especially of Joseph Chavkin, under section 21a and at the first meeting of creditors. He also called said Joseph as a witness in this proceeding. The District Court entered an order requiring the bankrupt to surrender substantially what the financial statement aforesaid declared them to be worth, less what had been turned over to the trustee when petition was filed against them, about a month after the date of said statement. To this order the bankrupts filed this petition to revise.

Myers, Kutner & Schuhmann, of New York City (Maurice Lefkort, of New York City, of counsel), for bankrupt.

Samuel C. Duberstein, of New York City, for trustee.

Before WARD, ROGERS, and HOUGH, Circuit Judges.

HOUGH, Circuit Judge (after stating the facts as above). This cause having been brought before us by petition to revise, our duties are limited to inquiring whether any error of law was committed below. There are but two points to be considered, viz. petitioner's assertions (1) that it was error to admit in evidence the financial statement above referred to, and (2) that there was no evidence upon which the court could ground the order complained of.

[1] 1. That a statement of this kind is competent, and may be persuasive evidence, against a bankrupt in proceedings of this nature, was specifically held in Re Loeb, 232 Fed. 601, 146 C. C. A. 559. The use in what are commonly known as "turn-over proceedings" of these "financial statements" has long been common and well known. They are not conclusive, but it is difficult for us to understand how anything can be more persuasive, as against the person making it, than a solemn statement of financial worth made to induce credit.

[2] 2. It seems to be thought by the petitioners that, because all the bankrupts, except Joseph Chavkin, swore that their business duties

⟹For other cases see same topic & KEY-NUMBER in all Key-Numbered Digests & Indexes

Digitized by Google

gave them no acquaintance whatever with the firm's financial condition, and Joseph himself, when called as a witness in this proceeding, refused to answer substantially every question put to him on the ground that such answer might incriminate or degrade him, therefore there was no evidence, other than said financial statement, upon which to ground the order complained of.

Without expressing any opinion on the probative value of the testimony or affidavits of a man who even declined to recognize his signature to the schedules in bankruptcy (on the ground above stated), we find in the record evidence obtained upon examination under section 21a and largely from the sister bookkeeper, of the substantial correctness of said financial statement. At all events there was certainly some evidence, and its comparative value is not for us to decide. There was jurisdiction in the court to make the order. In re Schlesinger, 102 Fed. 117, 42 C. C. A. 207. The trustee lays a foundation when he shows by any competent evidence, including the claims or assertions of the bankrupts themselves, that they had unscheduled property a reasonable time before petition filed; the bankrupt must then account for said property, or otherwise rebut the trustee's prima facie case by credible testimony. In re Weinreb, 146 Fed. 243, 76 C. C. A. 609; In re D. Levy & Co., 142 Fed. 442, 73 C. C. A. 558; In re Graning, 229 Fed. 370, 143 C. C. A. 490, Ann. Cas. 1917B, 1094.

[3] These bankrupts seem to have made no attempt to comply with this rule; but, assuming that there was conflicting evidence presented to the court, the question thereby presented was of fact, and not reviewable in a proceeding of this nature.

It may be added that petitioners seem to think that this is a contempt proceeding, because in the same order which directed the payment of money to the trustee the bankrupts were called on to show cause why they should not be punished for contempt, if they did not make the required payment. Such, however, is not the case. There has been no punishment for contempt, and no order adjudging contempt. We have nothing before us but the legal propriety of the "turn-over" order.

Order affirmed, with costs.

(249 Fed. 344)

WILLIAMS v. CANARY.

(Circuit Court of Appeals, Eighth Circuit. March 2, 1918.)

No. 4934.

1. PARENT AND CHILD ⟹9—CONTRACTS—VALIDITY.

While equity will closely scan a contract between a parent and his child, entered into shortly after the child reached his majority, yet the contract is not prima facie void, and where not unconscionable, and made by the child with complete understanding, will not be stricken down.

2. GUARDIAN AND WARD ⟹131—CONTRACTS—VALIDITY.

Where a guardian, shortly after a ward reached his majority, or while any of the guardianship duties were yet to be performed, contracted with the ward, the guardian has the burden of showing that the transaction was fair and reasonable, and that no advantage was taken.

⟹For other cases see same topic & KEY-NUMBER in all Key-Numbered Digests & Indexes

Digitized by Google

3. GUARDIAN AND WARD ⟹69—CONTRACTS—STATUTE—CONSTRUCTION.
The purpose of Rev. Laws Okl. 1910, §§ 3339-3341, providing that a guardian shall not be discharged until a year after his ward's majority, is to provide a period for the orderly review of the guardian's acts and the settlement of his accounts, and not to extend his authority over the ward's estate, or its accompanying disqualification; so a contract between a guardian and ward within the year period is not for that reason invalid.

Appeal from the District Court of the United States for the Eastern District of Oklahoma; Ralph E. Campbell, Judge.

Suit by Emma P. Williams, née Canary, against James D. Canary. From a decree dismissing the petition, plaintiff appeals. Affirmed.

Malcolm E. Rosser, of Muskogee, Okl. (George S. Ramsey, of Muskogee, Okl., and Edgar A. De Meules and Villard Martin, both of Tulsa, Okl., on the brief), for appellant.

Joseph B. Tomlinson, of Independence, Kan., for appellee.

Before HOOK and SMITH, Circuit Judges, and TRIEBER, District Judge.

HOOK, Circuit Judge. This is a suit by Emma P. Williams, formerly Canary, against James D. Canary, to cancel an oil and gas mining lease of a tract of land in Oklahoma patented to her as a Cherokee allottee, and also a working contract supplemental to the lease, upon the ground that he obtained them by fraud and undue influence. At the hearing on the merits the trial court held the instruments valid and dismissed the petition. The plaintiff appealed.

The defendant is plaintiff's father, and had been the guardian of her estate during her minority by appointment of the court having cognizance of such matters. A prior lease to an oil company, executed by him as her guardian, had just expired with her minority. There were at that time 10 producing oil wells on the property. The lease and the contract in controversy were executed the day after the plaintiff became of age, and that circumstance is now principally relied on to invalidate them. The trial court found from the evidence that plaintiff voluntarily executed the instruments and fully understood their terms; also that their provisions were more advantageous to her than she could at the time have obtained from others or by her own operation of the property. We concur in this conclusion, and if further assurance were needed it would appear from plaintiff's acquiescence in the transaction and the receipt of its substantial fruits for more than six years before this suit was brought, during the last four of which she was married and living apart from her father. The suit is quite without warrant or foundation in any fact aside from the time the lease and the contract were made.

[1] A child, upon attaining majority, becomes clothed with contractual capacity, and that necessarily implies the power to pick both subject-matter and parties and to bind himself equally with those with whom he deals. There is nothing in the law that fixes a further period of disqualification for the parent. A contract between parent and major child cannot be said to be prima facie void in law, or for

⟹For other cases see same topic & KEY-NUMBER in all Key-Numbered Digests & Indexes

Digitized by Google

that reason to be so doubtful as to impose an affirmative burden of justification. Jenkins v. Pye, 12 Pet. 241, 9 L. Ed. 1070. It is common experience, however, that the influence, personal confidence, and trust incident to that relation do not ordinarily end with minority, but continue in varying degrees and afford favorable opportunities for imposition and abuse. Because of this, the transaction, when assailed in a court of equity, will be examined with a searching eye to discover whether in all the circumstances a fraudulent or unconscionable advantage has been taken, and in the inquiry its proximity to the time of majority will be regarded. But equity will not condemn in the face of perfect knowledge, understanding, free consent, and good faith by those concerned.

[2] In the case of a transaction between guardian and ward at or near the time of emancipation, and while any of the guardianship duties are yet to be performed, the rule is more strict. Equity casts upon the guardian the burden of showing that the transaction was understood, was fair and reasonable, and that no advantage was taken. Harper v. Taylor, 113 C. C. A. 572, 193 Fed. 944; 2 Pom. Eq. Juris. § 961. As we have seen, that burden was discharged in this case.

[3] There is a contention that, as a statute of Oklahoma provides that a guardian appointed by a court is not entitled to his discharge until a year after his ward's majority, the relation between plaintiff and defendant still existed at the time of the transaction, and therefore the latter was wholly disqualified to contract. But the statute was to provide a period for the orderly review of his acts during guardianship and the settlement of his accounts. It was not intended as an extension of his authority over the ward's estate or its accompanying disqualification. The same statute authorized the ward upon coming to majority to settle accounts with his guardian and give him a release which would be valid if obtained fairly and without undue influence. Rev. Laws Okl. 1910, §§ 3339, 3340, 3341.

The decree is affirmed.

(249 Fed. 346)

NEW YORK CENT. R. CO. v. GAPINSKI.

(Circuit Court of Appeals, Second Circuit. January 16, 1918.)

No. 103.

MASTER AND SERVANT ⟹285(7)—EVIDENCE—PRESUMPTIONS—JURY QUESTION.

Where railroad employé was injured, while bending over, inserting stuffing and grease in journal boxes of cars, and there was testimony that at the time of the injury cars were sent down the adjoining track with doors hanging or sticking out, the question whether he was struck by such an obstruction was properly submitted to the jury, and a verdict for plaintiff could not be attacked on the theory that presumption was built upon presumption.

In Error to the District Court of the United States for the Southern District of New York.

⟹For other cases see same topic & KEY-NUMBER in all Key-Numbered Digests & Indexes

Digitized by Google

Action by Alexander Gapinski against the New York Central Railroad Company. There was a judgment for plaintiff, and defendant brings error. Affirmed.

Gapinski was a laborer in the employ of the railroad company and at the time of injury was engaged in examining and greasing the journal boxes of freight cars. His occupation required him to stoop over while removing and inserting the "stuffing" and grease in said journal boxes. He complained of having been struck and injured by some projecting object upon a car, one of several or many sent down upon the track on which, or alongside of which, he was working.

There was direct evidence that many of the cars lying at rest upon and sent down on said track were "crippled"; i. e. cars "with doors hanging out; * * * some were sticking out from cars that were broken." Gapinski testified that he did not know what hit him, because when he was struck he was "half stooping and * * * leaning over and working."

The testimony regarding crippled cars was denied, and the trial judge sent the case to the jury, to ascertain whether "there was any projection sufficient to hit a man who was at work" in the manner testified to by Gapinski himself. Plaintiff below had a verdict. The railroad company took this writ; the assignments of error substantially challenging the action of the trial court in refusing to dismiss or direct a verdict at the close of the whole case.

Alex. S. Lyman, of New York City (Robert A. Kutschbock and Martin Gilligan, both of New York City, of counsel), for plaintiff in error.

Charles P. Sullivan, of New York City (Lowen E. Ginn and Thomas F. O'Sullivan, both of New York City, of counsel), for defendant in error.

Before WARD, ROGERS and HOUGH, Circuit Judges.

HOUGH, Circuit Judge (after stating the facts as above). It is we think sufficient to dispose of this writ to refer to Smith v. Pennsylvania R. R. Co., 239 Fed. 103, 151 C. C. A. 277. We there pointed out that, where there was no proof that any definitely indicated thing wrought the injury complained of, nor "that the circumstances rendering it possible for the injuring thing suggested [by plaintiff] to reach or touch [plaintiff] existed at the time and place of damage," any verdict resting on such evidence, or lack of it, would be building one presumption upon another.

In that case the suggested instrument of injury was the swinging rake hook of a passing locomotive. In this case the suggested cause of plaintiff's hurt is a door hanging or projecting below the car body to which it belonged. But in the Smith Case there was no evidence whatever that any rake hook was projecting at the time when and place where plaintiff was injured. In this case there is direct evidence that not one, but several, if not many, cars having such unusual and dangerous projections were moving upon the track alongside of which the plaintiff here was required to work.

If the jury believed (as it did) this positive testimony of moving crippled cars, it was within their province to draw the inference that such proven projection did the hurt. In the Smith Case there was no proven projection. We think the case cited and the present one (considered together) perfectly illustrate the difference between a legiti-

Digitized by Google

mate presumption from proven facts, and an attempted and unlawful presumption from another presumption.

Judgment affirmed, with costs.

(249 Fed. 348)

THE NIGRETIA.

(Circuit Court of Appeals, Second Circuit. February 9, 1918.)

COURTS ⟹356—TAKING APPEAL—FEES—PREPAYMENT.

Act June 12, 1917, c. 27, § 1, 40 Stat. 157, which, under the caption "United States Courts," makes an appropriation for fees of clerks, provided that courts of the United States shall be open to seamen without furnishing bond, or prepayment of or making deposit to secure fees or costs, does not apply to the prosecution of appeals in the Circuit Court of Appeals; the clerk of that tribunal having a stated salary, appropriation for which was made by Act March 3, 1917, c. 163, § 1, 39 Stat. 1119.

Appeal from the District Court of the United States for the Southern District of New York.

Libel by Hassan Abdu and others against the steamship Nigretia, her engines, etc., claimed by the Limerick Steamship Company. There was a decree for claimant, and libelants appeal. On motion by libelants for an order directing the clerk of the Circuit Court of Appeals to accept and file the transcript or apostles without the payment of, or security for, any fees whatever. Motion denied.

Silas B. Axtell, of New York City, for appellants.

Kirlin, Woolsey & Hickox, of New York City, for appellees.

Before WARD, ROGERS, and HOUGH, Circuit Judges.

PER CURIAM. This motion is renewed because of the passage at the first session of the 65th Congress of the Act of June 12, 1917. This appropriation bill (at 40 Stat. 157), under the subheading or caption "United States Courts," allots:

"For fees of clerks $215,000: Provided, that courts of the United States shall be open to seamen, without furnishing bond or prepayment of or making deposit to secure fees or costs, for the purpose of entering and prosecuting suit or suits in their own name," etc.

It is urged that this statute applies to the prosecution of appeals in the Circuit Courts of Appeal; and it is apparently thought that the appropriation covers salary of the clerk of this court. This is a mistake. Clerks of Circuit Courts of Appeal have a stated salary, not dependent on fees, of $3,500 each, and for the fiscal year ending June 30, 1918, appropriation therefor was made by chapter 163 of 1917 (act signed March 3, 1917, and appropriation stated in 39 Stat. 1119).

The statute relied upon by the moving party can refer therefore only to courts other than Circuit Courts of Appeal, and certainly to District Courts, for the clerks of which no provision is made in chapter 163, supra.

It follows that the motion must be denied.

⟹For other cases see same topic & KEY-NUMBER in all Key-Numbered Digests & Indexes

Digitized by Google

(249 Fed. 349)

LEBERT v. PACIFIC MAIL S. S. CO.

(Circuit Court of Appeals, Fifth Circuit. March 21, 1918.)

No. 3106.

DEATH ⟹31(3)—ACTIONS—RIGHT OF PERSONAL REPRESENTATIVE.

Where no provision of law of the Canal Zone gave a right of action to the personal representatives of a deceased person, the personal representative can maintain no action for wrongful death.

In Error to the District Court of the United States for the Canal Zone; Wm. H. Jackson, Judge.

Action by Ursulina Lebert against the Pacific Mail Steamship Company. There was a judgment for defendant, the action being dismissed, and plaintiff brings error. Affirmed.

Valentine E. Bruno, of Ancon, C. Z., and Donelson Caffery, Lamar C. Quintero, and J. M. Quintero, all of New Orleans, La., for plaintiff in error.

Stevens Ganson and Theodore C. Hinckley, both of Panama, R. P., for defendant in error.

Before PARDEE, WALKER, and BATTS, Circuit Judges.

WALKER, Circuit Judge. This writ of error presents for review a judgment dismissing a suit brought by the administratrix of the estate of Daniel Lebert, deceased, to recover damages for his death, alleged to have been caused in the Canal Zone by negligence attributable to the defendant in error. It is not necessary to decide whether the provisions of the Canal Zone law relied on in behalf of the plaintiff in error do or do not give a civil right of action for wrongfully causing the death of a human being. No provision of that law of which we are advised indicates that such a right of action is given to the personal representative of the deceased person.

The judgment is affirmed.

(249 Fed. 349)

THE W. H. FLANNERY.

(Circuit Court of Appeals, Second Circuit. January 16, 1918.)

No. 56.

ADMIRALTY ⟹118—REVIEW—FINDINGS OF FACT.

An appellate court is reluctant to disturb a finding of fact in an admiralty case by the trial judge, who had the advantage of seeing and hearing the witnesses.

Appeal from the District Court of the United States for the Eastern District of New York.

Libel by William Beard and another against the steam tug W. H. Flannery and her engines, etc., claimed by James H. Flannery. From a decree for libelant, claimant appeals. Affirmed.

Digitized by Google

Macklin, Brown & Purdy, of New York City (Pierre M. Brown, of New York City, of counsel), for appellant.

Ralph James M. Bullowa, of New York City, for appellees.

Before WARD, ROGERS, and HOUGH, Circuit Judges.

PER CURIAM. The question which this case presents involves no question of law. The District Judge, who saw and heard the witnesses, has found as a fact that the collision was occasioned by the Flannery's failure to comply with the signal given by the Beard and which the Flannery had accepted. This court is reluctant to disturb a conclusion of fact reached by a trial judge, who had the advantage of seeing and hearing the witnesses.

Decree affirmed.

Digitized by Google

(249 Fed. 385)

LOUISVILLE & N. R. CO. v. WESTERN UNION TELEGRAPH CO.

(Circuit Court of Appeals, Sixth Circuit. April 2, 1918.)

No. 2952.

1. EMINENT DOMAIN ⟹47(3)—NECESSITY FOR APPROPRIATION.

Acts 1898, c. 49 (Ky. St. § 4679c), authorizing telegraph companies to condemn easements over the rights of way of railroad companies, allows judgment only for so much land as may be necessary; therefore, as necessity ordinarily underlies the exercise of such right, it must be assumed that some measure or degree of necessity shall be shown before the right of condemnation matures.

2. EMINENT DOMAIN ⟹47(3)—NECESSITY OF TAKING—DETERMINATION.

The question of the necessity of a taking is a legislative one, and the necessity cannot be declared by telegraph companies, asserting the right to condemn an easement over a railroad right of way pursuant to the Kentucky statutes.

3. EMINENT DOMAIN ⟹169—CONDEMNATION—CONDITIONS.

Acts 1898, c. 49, § 1 (Ky. St. § 4679c, subd. 1), after providing for condemnation by telegraph companies of easements for their lines along the right of way of any railroad, declares that the posts, arms, insulators, and other fixtures of such telegraph lines shall be erected and maintained in such a manner as not to interfere with the ordinary travel and traffic on such railroads, or with any other telegraph line already constructed on the right of way. *Held*, that the provision cannot be regarded as intending to formulate a hard and fast condition precedent, which might forbid any condemnation, but must be deemed intended to describe and characterize the nature of the right and easement which is to be condemned and to impose a continuing limitation on that right.

4. EMINENT DOMAIN ⟹47(3)—CONDEMNATION—DEFENSES.

In view of Acts 1898, c. 49, §§ 4, 5 (Ky. St. § 4679c, subds. 4, 5), respectively providing that the jury shall assess the value of the land taken, and other incidental damages, and that testimony as to the value of the land taken and all actual damages that will accrue in the diminution of the value of the remainder of the right of way shall be admitted, the above provisions as to the construction of telegraph lines do not forbid a condemnation, though some interference with the railroad right of way will result.

5. EMINENT DOMAIN ⟹138—DAMAGES—COMPUTATION.

Under the provisions requiring payment of damages for the land actually taken and occupied and for the diminution of the value of the remainder, while there is a taking of the pole-occupied area in the sense that compensation must be made, yet, as the easement is subject to be shifted, the value of the land taken should be computed in terms of damage to the remainder of the right of way.

6. EMINENT DOMAIN ⟹321—CONDEMNATION—INTERESTS CONDEMNED.

Under Acts 1898, c. 49 (Ky. St. § 4679c), authorizing telegraph companies to condemn easements over the right of way of a railroad and providing that the line shall be constructed in such manner as not to interfere with the ordinary use of the railroad, a telegraph company, condemning a way, takes it subject to the duty of moving its line if necessary for the convenient operation of the railroad, and in case of necessity of removing the same from the railroad right of way entirely, for in view of the topography of Kentucky it must be assumed that the Legislature contemplated that there would be considerable railroad improvements in the future.

7. EMINENT DOMAIN ⟹321—CONDEMNATION—REMOVAL OF EASEMENTS.

Under Acts 1898, c. 49 (Ky. St. § 4679c), the question whether a telegraph company should remove its line from the easement condemned over

⟹For other cases see same topic & KEY-NUMBER in all Key-Numbered Digests & Indexes

Digitized by Google

a railroad right of way, on account of the interference with the operation of the railroad company, should be determined in good faith by the railroad company as if the telegraph line were its own.

8. EMINENT DOMAIN ⟹128(1)—DAMAGES—REDUCTION.

As a telegraph company, condemning an easement over a railroad right of way under Acts 1898, c. 49 (Ky. St. § 4679c), takes its easement subject to the duty of removing its line in case it is necessary to prevent interference with railroad operations, that fact should be taken into consideration in assessment of damages, and diminution of damages cannot be avoided on the ground that the offer of the telegraph company to so take its line was promissory only.

9. EMINENT DOMAIN ⟹120—RAILROAD RIGHT OF WAY—NEW USE—"RAILROAD PURPOSE."

The use by a railroad company of its right of way for construction and maintenance of its own telegraph, telephone, and electric signal lines is one for a railroad purpose, as modern railways cannot operate without such contrivances.

[Ed. Note.—For other definitions, see Words and Phrases, First and Second Series, Railroad Purposes.]

10. EMINENT DOMAIN ⟹108—CONDEMNATION—DAMAGES.

Where a telegraph company, under Acts 1898, c. 49 (Ky. St. § 4679c), condemns an easement over a railroad right of way for its telegraph line, the railroad company is entitled to damages for any interference with its own telegraph lines, as use of right of way for a railroad telegraph line is one for railroad purposes.

11. EMINENT DOMAIN ⟹108—CONDEMNATION—DAMAGES.

Where a telegraph company, which under a contract with a railroad company constructed a line on its right of way, abrogated the contract and secured an order restraining the railroad company from removing the telegraph line, the railroad company is, on condemnation proceedings under Acts 1898, c. 49 (Ky. St. § 4679c), entitled to compensation for additional expense, past and future, because it was forced to construct its own railroad telegraph line on a less advantageous part of the right of way.

12. EMINENT DOMAIN ⟹128(1)—CONDEMNATION—NOMINAL DAMAGES.

Where a telegraph company, condemning an easement over a railroad right of way under Acts 1898, c. 49 (Ky. St. § 4679c), obtained the most advantageous route for placing its line as a result of litigation following the termination of a contract between the companies, whereby the telegraph company had constructed a line on the right of way, the railroad company is not restricted to nominal damages, on the theory that the easement was ambulatory.

13. EMINENT DOMAIN ⟹108—CONDEMNATION—ELEMENTS.

In a proceeding by a telegraph company to condemn an easement for its line over a railroad right of way pursuant to Ky. St. § 4679c, the elements of damage, consisting of all the diminution in the value of the use of the remainder of the right of way and expenses to which the railroad company might be subjected, stated.

14. EMINENT DOMAIN ⟹207—DAMAGES—AWARDING.

On condemnation by a telegraph company under Ky. St. § 4679c, of an easement over a railroad right of way, the damages should be awarded as a unit.

15. EVIDENCE ⟹533—EXPERT OPINION—DAMAGES.

In a proceeding by a telegraph company to condemn an easement over a railroad right of way, where the question of damages depended on the diminution in value of the remainder of the right of way for railroad purposes, railroad men, familiar with the cost and effect of every operation which might be involved, are competent to testify to the damage, as

Digitized by Google

are telegraph men, familiar with construction and maintenance problems, so far as their knowledge extends; this being so, though such witnesses did not know the market value of the land occupied by the telegraph line.

16. EMINENT DOMAIN ⟹232—STATUTES—CONSTRUCTION—VIEW.
Acts 1898, c. 49 (Ky. St. § 4679c), providing for condemnation by telegraph companies of easements over railroad rights of way, which declares that the jury shall not be required to go upon or view such right of way, is not open to attack on the ground that a view of the property was not permitted, but that question must be deemed to have been left to the discretion of the court.

17. STATUTES ⟹112—TITLE—SUFFICIENCY.
Acts 1898, c. 49 (Ky. St. § 4679c), entitled "An act giving effect to so much of section one hundred and ninety-nine of the Constitution * * * as provides for the right to construct and maintain lines of telegraph within the state," and which authorizes telegraph companies to condemn rights of way, is not subject to attack on the ground that the condemnation provisions were not expressed in its title.

18. CONSTITUTIONAL LAW ⟹42—OBJECTIONS—PERSONS ENTITLED TO URGE.
The contention that Acts 1898, c. 49 (Ky. St. § 4679c), authorizing condemnation by telegraph companies of easements over railroad rights of way, is invalid because of the provision that no notice need be given any mortgagee, cannot be urged by a railroad company, for one not injured cannot question the constitutionality of a law.

19. EMINENT DOMAIN ⟹262(5)—REVIEW—HARMLESS ERROR.
Where it would have been the duty of the court to have directed a verdict on an issue in a condemnation proceeding, the refusal of the court to submit that issue to the jury was harmless, though erroneous.

20. JURY ⟹19(11)—PROCEEDINGS—JURY TRIAL.
As it is evident, from a consideration of sections 4 and 6, prescribing forms for the oath and verdict, that Act Ky. 1898, c. 49 (Ky. St. § 4679c, subds. 4, 6), relating to condemnation by telegraph companies of easements for their lines along the right of way of any railroad, contemplates that the question of necessity and similar precedent conditions shall be decided by the court in advance, or separate from the jury trial concerning compensation, the fact that the proceeding is deemed an action at law, within Rev. St. U. S. § 566 (Comp. St. 1916, § 1583), for some purposes, does not, where condemnation proceedings under the statute are brought in the federal court, warrant jury trial on the question of necessity of the condemnation.

Knappen, Circuit Judge, dissenting in part.

In Error to the District Court of the United States for the Western District of Kentucky; Walter Evans, Judge.

Petition by the Western Union Telegraph Company against the Louisville & Nashville Railroad Company. There was a judgment of condemnation, assessing damages, and defendant brings error. Reversed and remanded.

Henry L. Stone, Edward S. Jouett, and Helm Bruce, all of Louisville, Ky., for plaintiff in error.

A. P. Humphrey and A. E. Richards, both of Louisville, Ky. (Rush Taggart and Albert T. Benedict, both of New York City, and Richards & Harris and Humphrey, Middleton & Humphrey, all of Louisville, Ky., of counsel), for defendant in error.

Before KNAPPEN and DENISON, Circuit Judges, and KILLITS, District Judge.

Digitized by Google

DENISON, Circuit Judge. The facts which led up to the present controversy are sufficiently detailed in our opinion in Louisville, etc., R. R. v. Western Union Co., 207 Fed. 1, 124 C. C. A. 573. Following out the theory upon which the telegraph company was there held entitled to a restraining order, it instituted, in the court below, a condemnation proceeding against the railroad company, for the purpose of acquiring the right to maintain its line in the position it was already occupying upon and along the railway grounds. The line along the right of way thus sought to be condemned, and lying in Kentucky, was about 1,000 miles long. There having been a preliminary determination by the court that the necessary precedent conditions existed, there was a trial before a jury as to the amount of damages, which resulted in a directed verdict for $5,000. Treating the whole proceeding as a trial at common law, the railroad company brings this writ of error. The assignments are ample to raise every existing question.

The disposition of many of the questions presented depends upon the construction and interpretation of the Kentucky statute (Acts 1898, c. 49 [Ky. St. § 4679c]), the pertinent parts of which we reproduce in the margin.[1] In that construction—so far as concerns most of the questions—we have no help from any decisions of the Kentucky Court

[1] An act giving effect to so much of section 199 of the Constitution as provides for the right to construct and maintain lines of telegraph within the state. (March 19, 1898.)

Sec. 4679c. 1. *Right of to Erect and Operate Lines.* That a telegraph company chartered or incorporated by the laws of this or any other state, shall, upon making just compensation, as hereafter provided, have the right to construct, maintain and operate telegraph lines through any public lands of this state, and on, across or along all highways and turnpikes, and across and under any navigable waters, and on, along and upon the right of way and structure of any railroad in this state: Provided, that the posts, arms, insulators, and other fixtures of such telegraph lines be erected and maintained in the usual manner of constructing, operating and maintaining telegraph lines on or along and upon the right of way of railroads, and on, across and along the highways, and across and under navigable waters, and in such manner as not to interfere with the ordinary use or the ordinary travel and traffic on such highways, railroads or waters, or that of any other telegraph line already constructed on the right of way of any railroad.

* * * * * * * * * *

3. *Petition for Condemnation Proceedings may be Filed.* That in case any telegraph company having the rights and privileges herein granted is unable to agree with such railroad or turnpike company for the exercise of such rights and privileges, such telegraph company may file its petition, sworn to by its agent, in the office of the clerk of the county court of any county in which any portion of such railroad or turnpike is situated or may run, and one proceeding shall be sufficient to condemn the right of way herein provided for of any railroad or turnpike in this state. Said petition shall designate the railroad or turnpike as the case may be, and the particular use, right, easement or privilege sought to be condemned, and shall state the name of the petitioner, where incorporated, how, and in what manner, and with what kind of material it proposes to construct its telegraph line, and that it has complied with the Constitution of this commonwealth in regard to such corporations seeking to exercise right of eminent domain.

* * * * * * * * * *

4. * * * A jury of twelve shall be impaneled, who shall be sworn by the clerk or judge of said court, as follows: "I do solemnly swear that as a mem-

Digitized by Google

of Appeals. The statute has been before the Kentucky court of last resort only twice, and then not upon matters of general construction. We therefore seek to ascertain the meaning, according to what seem to us the necessary inferences from the language used and from common knowledge of the situation involved, and from that viewpoint consider other decisions as far as they seem pertinent.

[1, 2] 1. This statute gives the right of eminent domain. A necessity for taking ordinarily underlies the exercise of such right, and statutes sometimes direct how that necessity shall be determined. See Lewis on Eminent Domain (3d Ed.) §§ 595–600. This statute contains no such direction, nor does it expressly require the judicial determination of any such general condition precedent. Clearly, however, there might be circumstances which would make the exercise of the right so unreasonable and arbitrary that we could hardly suppose the Legislature intended to permit it; and section 7 expressly contemplates that only so much shall be taken as is necessary. We think it safe to assume that some measure or degree of necessity must be shown or be presumed to exist before the right of condemnation matures. The telegraph company does not possess any fraction of the state's legislative power, and does not have power itself to declare a necessity, be-

ber of this jury, I will a true verdict render in this cause, assessing for the defendant the actual cash value of so much of its land as may be shown by the proof will be actually taken and occupied by the petitioner, and such other incidental damages, if any, as shown by the proof will accrue to the remainder of the right of way for the purpose for which it is held by the defendant, by reason of the construction of petitioner's telegraph line in the manner set out in the petition, so help me God."

5. *Evidence That may be Introduced—Measure of Damages.* That the court shall admit any relevant testimony either party may offer to prove the cash market value of the land that will be taken and occupied by the petitioner, and all actual damages that will accrue to the defendant in the diminution of the value of the remainder of its right of way for railroad or turnpike purposes, as the case may be, by reason of the construction of the telegraph line upon such right of way in the manner set out in the petition, and in considering incidental damages to the defendant, they may take into consideration any advantages that may accrue to the defendant as shown by the proof, by reason of the construction of such telegraph line.

6. *Verdict, Form of.* The jury shall not be required to go upon or view such right of way, and shall return their verdict on the form following: "We, the jury, assess the damages and just compensation to be paid ..... by the ..... to be dollars .....;" and the form of the verdict may be given the jury by the court.

7. *Judgment, Form of.* * * * "Now upon payment of said award either to the defendant or to the clerk of this court, and all costs in this behalf expended, said ..... telegraph company may enter upon said land and appropriate so much thereof as may be necessary, as prayed for in its petition."

* * * * * * * * * *

9. *Mortgagee need not be Notified—Proceeding if Mortgage on Land Condemned.* That no notice of the condemnation proceedings herein provided for, shall be given to any mortgagee of the defendant, but in the event there be any mortgage recorded in the county where such proceedings are had, upon the property condemned, then the damages and compensation awarded by the jury shall be paid to the clerk of said court, whose duty it shall be forthwith to mail written notice of such proceedings, and of said award, to the mortgagee or trustee named in said mortgage, who may contest with the said defendant for the same, if he sees fit to do so.

Digitized by Google

cause a legislative body may do so. See Sears v. Akron (March 4, 1918) 246 U. S. 242, 38 Sup. Ct. 245, 62 L. Ed. 688.

[3] 2. Embodied in the first section, and so perhaps to be considered as a condition of the grant, are these words (selecting only those now important):

"Provided, that the posts, arms, insulators, and other fixtures of such telegraph lines be erected and maintained in the usual manner of constructing, operating and maintaining telegraph lines on or along and upon the right of way of railroads * * * and in such manner as not to interfere with the ordinary use or the ordinary travel and traffic on such * * * railroads."

The telegraph line must be erected, operated, and maintained in the usual manner, and must not interfere with the ordinary use of, or traffic on, the railroad. We cannot regard this proviso as intending to formulate a hard and fast condition precedent which might prevent any condemnation, and this for three reasons: The first is that in the ordinary and typical case which the Legislature must have had in mind no such broad issue could arise. In almost any supposable situation (save in exceptional spots) a telegraph line could always be constructed and maintained in some suitable place along the railroad right of way, without constituting such an interference with the use of the property for railroad purposes as the Legislature could reasonably consider sufficient to prevent condemning at all. The second reason is that the provision as to maintenance cannot be a condition precedent to condemnation, and yet it is put precisely on a par with the condition as to construction, "be erected and maintained," and hence the provision as to the erection cannot be a general condition precedent. The third is that the language is not conditional in form. It is not "provided that the * * * lines" can be erected, etc.; it is an affirmative requirement that, if built, they "be erected and maintained," etc.

In our judgment the rare instances—if there are any—where interference with railroad use will be so inevitable, so extensive and so serious as to forbid condemnation at all only present a phase of "necessity"; and this proviso is intended to describe and characterize the nature of the right and easement which are to be condemned. The right to erect the poles and wires is given, but they must be so put up at the beginning, and always so maintained, as not to constitute the forbidden interference with ordinary use. The provision expresses, not a condition precedent, but a condition constant—a continuing limitation.

[4] 3. It is no part of the condition or limitation that the telegraph line shall not interfere at all with railroad uses and purposes; such a thought would be contrary to common knowledge and observation. No telegraph lines can be erected and maintained on a railroad right of way without interfering in some measure or degree with some of the uses to which the railroad may rightfully wish to put the occupied property.[2] To say that any such incomplete and partial in-

[2] Though a case may be conceived where the interference is so negligible as not to justify damages.

Digitized by Google

terference was contemplated by the proviso as a condition or limitation precedent would be to defeat the whole object of the statute, by providing that the condemnation and use should not occur except under conditions that never exist. Nor does the literalness of the language require any such sweeping view. It speaks of interference with "ordinary" use or traffic; it makes no reference to the supplementary uses which are rightful and sometimes necessary.

In this connection, it must be observed that section 4, with reference to the oath of the jury, and section 5, regulating the evidence, expressly provide that the railroad shall have, not only the value of the land to be taken and occupied, but such damages as "will accrue to the defendant in the diminution of the value of the remainder of its right of way for railroad * * * purposes." It is plainly inconsistent with this damage-defining provision to suppose that there can be no condemnation unless it has first been determined that there will be no impairment of the use of the remainder of the property for railroad purposes. We think the conclusion inevitable that the statute, taking its various parts together, has reference to two kinds or degrees of interference with such use of the property, and that only when the interference is so inevitable and so extreme as to seriously hamper ordinary use and traffic on the railroad is it intended that the condemnation proceedings should be dismissed, in whole or in part, for that reason.

It is well recognized that this "interference" may be insufficient to forbid condemnation and yet sufficient to justify damages. In Louisville Co. v. Western Union Co., 184 Ind. 531, 534, 111 N. E. 802, 803, Ann. Cas. 1917C, 628, the Supreme Court of Indiana considered—

> "when such interference passes the stage where it may be compensated in damages and becomes so substantial and material as to preclude the right of * * * appropriation."

In applying a generally similar statute,[3] the Supreme Court of Tennessee, in Western Union Co. v. Railroad Co., 133 Tenn. 69, 714, 182 S. W. 254, 260, said:

> "We deem the true rule to be that property already dedicated to a public use is in this respect on the same plane as other property, provided there does not exist a condition that would prevent condemnation—an interference with the first public use by the second so material as to 'obstruct' or seriously and extraordinarily impair the use for ordinary railway purposes, including telegraphic communication by means of the railway's own line of wires.
>
> "If the interference goes to the extent of so obstructing the earlier use, the power to condemn is lacking; but the theory underlying our statute is that when the interference does not go that far, the inconvenience and impairment may be compensated for in damages and the taking for the second use permitted."

[5] 4. The damages to be recovered are for the land actually taken and occupied, and for the diminution of the value of the remainder. In the ordinary sense of most condemnations, no land is here "actual-

[3] The Tennessee statute uses the word "obstruct"; but "interfere with" and "obstruct" are in this situation essentially synonymous.

Digitized by Google

ly taken and occupied"; but the language is adopted from the familiar situation where it is more accurate. The total area upon which the poles and guy wire posts stand is negligible—perhaps two acres for the thousand miles—and the strip of land overhung by the cross-arms and wires is not appropriated in any exclusive way. "Taking" doubtless there is of this pole-occupied area and of this strip, in the sense that compensation must be made pursuant to the constitutional mandate; but when we find that even this "taking" is not specifically permanent, but is subject to be shifted to other positions (as we hereafter point out), we are unable to see any substantial distinction, as to compensation basis, between the land "actually taken" and the diminution of the remainder. It is impossible to know the value of what is "taken" in this qualified sense, except by measuring that value in terms of damage to the remainder. In its entirety, there is disclosed only the imposition of a shifting easement (in gross) upon a servient estate, involving the exclusive and permanent appropriation of no substantial body of property, but only lessening the value of the servient estate to its owner; and a distinction, created prima facie by the statute, between the taking of the one and the diminution of the other, is an artificial and unsatisfactory basis for assessing compensation.

Postal Co. v. Patton, 153 Ky. 187, 154 S. W. 1073, is not inconsistent with this conclusion. The Kentucky Court of Appeals had there a case where the facts permitted the full application of the statutory theory that there is a real taking of part of the property, and where, therefore, it was necessary to describe with certainty the property to be taken. That was the case of a telephone line constructed across farm lands, and the owner of the farm was deprived of his ordinary use of the entire width of the strip, which must be subject to travel and use for repair and maintenance. Upon this strip he could not safely plant crops in the ordinary way. The differences are obvious between that situation and one where the telegraph line is and continues to be subject to the right of the owner of the servant estate to use his property for its primary purpose. What is said in this paragraph is not intended necessarily to deny that the right or easement condemned may be part of the statutory "land actually taken and occupied" and may have an independent value because capable of sale or lease. The record does not present this question in any concrete way.

[6] 5. Considering, not only the language of the statute, but the familiar elements of the situation to which it referred, we must infer that there was no intent to give the telegraph company a permanent specific location, from which it could not be thereafter removed, except by a cross-condemnation proceeding—if at all. It was as well understood in 1898 as it is to-day that the necessary use of a railroad right of way for railroad purposes at any selected place was subject to constant development and increase. Changes of the roadbed in order to lessen the gradients always had been possible and were coming to be very common. They involve excavations and fills. Much of the Kentucky railroads is through rough and mountainous coun-

Digitized by Google

try, and vast amounts of such work must have been anticipated. Double-tracking upon trunk lines to meet increasing traffic was known to be necessary. It would often involve removing any telegraph line close to the previously existing single track. Much of Kentucky's railroad system consisted of trunk lines; and the Legislature could not have overlooked the obvious fact that the permanent maintenance of a telegraph line in any particular location upon a railroad right of way might forever bar the reasonably necessary excavation, regrading, double-tracking, signals, switch tracks, terminals or other proper uses by the railroad of its own property; nor could the Legislature have intended that the telegraph company must pay the enormous damages which alone could rightly compensate the railroad company for the permanent deprivation of these rights. We then find written into this statute the specific direction that the line shall be "erected and maintained" in such a manner as not to interfere with the ordinary use of the property for railroad traffic. No exigency of construction requires us to think that the probable uses which we have just specified and other similar ones were not among the ordinary uses in contemplation of the Legislature. We think this statute was passed and its language chosen in view of the well-known situation, and that a reasonable construction of the statute requires it to be interpreted as providing that the right taken by condemnation is one which must be exercised by original location where it will least interfere with railroad uses and which is burdened by a future liability to move to other parts of the right of way, if such moving becomes reasonably necessary to avoid the forbidden interference. In saying this, and in referring elsewhere in this opinion to the burden of removal resting upon the telegraph company, we refer only to a removal to some other location within the limits of the right of way. Such apparent necessity as might develop for removal entirely outside of those limits—if such a case may be supposed—involves a contingency which we do not consider.

[7] Such a construction of the statute and the mutual rights and duties thereby created present no greater practical difficulties than are common in some other relationships. The standard of good faith is a simple one, and what the railway company would do if the telegraph line were its own is the measure of that standard. In such case, if the telegraph line were in the way of some desired use, the railway company would balance the trouble and expense of transferring the line against the reasons in favor of the transfer, and would decide accordingly. So, when the wire line belongs to the telegraph company, and the railroad desires to use the space on or above the ground for other purposes. The reasonable convenience of both parties must be balanced; an arbitrary decision may not compel nor prevent a transfer. If there were otherwise difficulty about holding that telegraph company's location was subject to possible shifting rather than permanently fixed, that difficulty would be here removed, because neither party can complain of this conclusion. It favors the railroad company, and the telegraph company has, by its petition, consented.

Digitized by Google

[8] 6. The railroad company objects to those provisions in the petition and in the judgment which provide for the future moving of the telegraph line to meet future railroad necessities, and its objection is that these are promissory stipulations, which have no place in the proceeding, and which cannot operate to reduce the damages to be awarded, because the performance of these stipulations will be, in a practical sense, largely at the will of the promisor. In the ordinary condemnation, where an exclusive possession is to be awarded to the condemnor, it may well be that such promissory stipulations cannot control the damages, and the same result has been reached even in the condemnation of a telegraph line over a railroad right of way. Louisville Co. v. Western Union Co. 184 Ind. 531, 111 N. E. 802, 803, Ann. Cas. 1917C, 628. However, we construe this statute as intending that the easement condemned shall be an easement subject to these limitations. It is not important that the telegraph company makes a promise to remove its line; when the event occurs which makes moving necessary, the right to maintain this line in the former location ceases; the judgment of the court formulating this limitation may, and in the public interest should, prescribe the method by which the reasonable right of the telegraph company to move its line in its own way and at its own expense may be preserved; but the controlling principle is that ultimately the right further to maintain the line in the first location expires and the railroad company may remove it. From this point of view, it is clear that the objection of the railroad company against being subject to promissory stipulations must fail. In adopting this view, we concur with the Supreme Court of Tennessee in saying, as it did, in 133 Tenn. 691, at pages 706 and 707, 182 S. W. 254, 258:

"Under this construction the terms set out and acceded to by the petitioner are not to be considered contract terms. They are not party-imposed, or court-imposed, but law-imposed. Any subsequent shifting in the pole line is to be referred for basis to the statute's provision for the safeguarding of the railroad user. It does not and will not depend upon the volition of the condemnor. An easement for a telegraph line is to be condemned, subject to such non-contract provisions in favor of the railway. To guarantee the observance of such terms by the petitioner, the petition sets them forth and judgment goes in accord."

The same conclusion has been reached in other cases, though with more dependence upon the form of the petition than we should be inclined to approve. See St. Louis Co. v. Postal Co., 173 Ill. 508, 535, 51 N. E. 382; American Co. v. St. Louis Co., 202 Mo. 656, 101 S. W. 576.

[9-11] 7. The diminution in the value of the right of way for railroad purposes is to be assessed. It is clear to us that the use by a railroad of its right of way for constructing and maintaining its own telegraph, telephone and electric signal lines, is use for a "railroad purpose"; indeed, we do not find, in the elaborate briefs of counsel for the telegraph company, any denial of this proposition. The railroad orders are transmitted by telegraph and by telephone, block and other distance signals are controlled through the use of electric currents passing over the wires, and, as matters were in

Digitized by Google

1898 and are now, a railroad can no more operate without a telegraph, telephone, and electric signal system than it can without tracks or cars. Com. v. Louisville Co., 164 Ky. 818, 832, 176 S. W. 375; Western Union Co. v. Nashville Co., 133 Tenn. 691, 718, 182 S. W. 254.

It necessarily follows that, for such interference as the condemnation causes to the use by the railroad company of its right of way for its own wire line, the condemnor must pay damages; and since any absolutely necessary use is an ordinary use, it also follows that the line condemned must be originally located where it will cause the minimum of interference with railroad use of the property for its own telegraph line.[4]

This is the principle which seemingly must control such condemnation proceedings in cases where the railway company has selected its location and built its line and in cases where there is no telegraph line along the right of way, but the railway company is about to build. Under such circumstances there is strong support for the "preferential right" contended for by the railroad and upheld by the Georgia courts. Western & Atlantic Co. v. Western Union Co., 138 Ga. 420, 427, 75 S. E. 471, 42 L. R. A. (N. S.) 225; Louisville Co. v. Western Union Co., 142 Ga. 531, 83 S. E. 126. Nor do we think any difference in the result necessarily follows from the fact that the existing line was built by the telegraph company through arrangement with the railroad company for a joint use under a contract by which the railroad company, in substance, leased the right of way to the telegraph company and the telegraph company paid its rent by telegraph service rendered. When such a contract expires by the election of the telegraph company (as here occurred), it is not easy to see why its rights, when it is driven to condemnation, are any greater because it formerly had a lease. See Western, etc., Co. v. Western Union Co., 138 Ga. 420, 75 S. E. 471, 42 L. R. A. (N. S.) 225. In this case, when its line was built, there was no statute for condemnation, and the line must have been erected under the expectation that at the expiration of the lease the telegraph company, failing in a new contract, would get off. While these appear to be the applicable principles, we do not need to pass upon them in any absolute way. A peculiar condition has here arisen, and it must be met according to the facts as they are. In the years which have passed since this controversy arose, the railroad company has built its own line for a great part of the Kentucky distance now involved—perhaps now the greater part of the more important lines. This line is complete and performs all the service needed by the railroad in its railroad operations. It consists of a line of poles and wires, erected usually upon the opposite side of the right of way from that occupied by the telegraph company's line, but in places erected on the same side, but on higher poles. To require now that

[4] Since interference with the railroad's own telegraph line is covered by the reference to "railroad purposes," it follows that "other telegraph line already constructed," in the last clause of section 1, is intended for the protection of the existing line of another telegraph company.

Digitized by Google

the telegraph company should remove its line from its present location, in order that the railroad company might occupy that same location, would be doing a great injury to one party without any compensating advantage to the other. It is not to be supposed that the railway company desires now to take down its own line, recently erected at great cost, and move it to the location occupied by the telegraph company's line; indeed, we do not find the railroad company claiming any intention of doing so, generally, if the condemnation could be entirely defeated. It is true the railroad company has not erected this line voluntarily, but has been compelled to do so because the telegraph company, through the aid of the courts, has maintained its possession of the preferred line, and hence, the conclusion that the railroad company cannot exercise its theoretical preferential right cannot be based on any election by it; but we think it has sufficient basis in the fact that no other outcome is now practically possible, save to allow the parties to keep their respective locations and compensate the railroad company in damages for the additional expense, past and future, thus caused. Neither party can complain of this conclusion; the railroad company because the alternative—that it may evict the telegraph company from the right of way which the railroad company does not need—cannot be accepted; the telegraph company, because it has selected this preferred location, always insisted upon it, and practically evicted the railroad company therefrom.

[12] 8. The telegraph company urges that the railroad company is entitled only to nominal damages, and hence that questions of evidence on the subject of damages are immaterial. In a case where it is thought that the telegraph company's easement is ambulatory or shifting, and constantly subject to the changing needs of the railroad, and where the telegraph line is to be erected at the edge of the right of way, a pole length away from the track, and not interfering with any present or prospective telegraph line of the railroad company, there is room to contend that nominal damages are sufficient. This result has been reached in several cases more or less dependent upon the conditions just stated. These cases are collected and sufficiently considered by Judge Sanborn, speaking for the Circuit Court of Appeals of the Eighth Circuit, in Northern Pacific Co v. North American Co., 230 Fed. 347, 354, 144 C. C. A. 489, L. R. A. 1916E, 572; and, without intending to pass upon rental value as a measure appropriate to this case, we do not hesitate to apply Judge Sanborn's general conclusion to a case like this, and to hold that the nature of the railroad's property and the character of the easement condemned require substantial, rather than nominal, damages.

Even if the present case indicated nothing more than nominal damages as to the interest "actually taken," so far as that interest can be separately conceived, yet it is one for substantial damages with reference to the diminution of the value of the right of way for railroad purposes. This conclusion would result from the element of conflict with the plaintiff's telegraph line, even if there were

Digitized by Google

no other element of damages, but also from the other elements we hereafter indicate. The evidence strongly tends to show that the location which the telegraph company insists upon occupying and which must be conceded to it under existing circumstances is the natural and best one for the railroad company's line, and that the construction of the latter in other places makes it not only less convenient of use but much more expensive to build and maintain.

[13] 9. Our conclusion that the telegraph company's location is not to be in all respects fixed and permanent affects much of the damage claimed on the trial; but after the revision necessarily following this conclusion, we think the testimony given or offered tended to show that damages to the railroad—that is to say, a lessening of the value of the right of way for railroad purposes—will arise from the following sources:

(a) The necessary use of the railroad property for the maintenance, changing, and repair of the telegraph line. In the adoption of the Patton Case (telephone) into the telegraph company law made by Louisville Co. v. Lang, 160 Ky. 702, 706, 170 S. W. 2, it is perhaps implied that the particular strip needed for access for repairs should be specified. We cannot take this implication as intended to decide the point. It fails to observe the difference between farm lands and a railroad right of way. It would be manifestly impracticable for telegraph company employés to travel or for new poles to be carried along any particular strip away from the track. Practically, these employés must use the railroad track or any part of the railroad right of way that may happen to be necessary. Indeed, there are some miles of this pole line which cannot be reached at all except from the track.

(b) The troubles and delays resulting from the necessary opportunity to be given the telegraph company to move its line when the existing location is sufficiently needed for trackage or structures, excavations or fills, unobstructed vision, or any railroad use, and from collecting the expense of making such removal from the telegraph company if the railroad does the moving itself.

(c) The additional expense, past or future, resultant upon the erection and maintenance and operation of the railroad's telegraph or signal line upon a location less desirable than that which would have been used except for the telegraph company's line. It can make no difference with this additional expense whether or not the railroad company intends to, or has the right to, carry commercial wires upon the same pole line and do a commercial business.

(d) The impairment of the most perfect utility to the railroad of its right of way and tracks in those particulars not sufficiently vital to justify the removal of the telegraph company's line to another location. For example, poles or guys or braces are said to embarrass operations of spreaders, wreckers, pile drivers, steam shovels, blasting work, etc. The fact that the railroad company has acquiesced in this situation for a period of years or desired the same location for its own line is sufficient to show the lack of that obstruction which would be fatal to condemnation; but it is not sufficient to prevent the railroad from claiming damages—if any there are—for these or

Digitized by Google

similar burdens after it has lost that joint interest in the telegraph line which may have compensated for the acquiescence, or when it is not to have the benefit which might counterbalance the burden.

(e) Additional expense caused by the presence of this additional telegraph line in the matter of keeping the right of way free from weeds and refuse. This duty was imposed by statute (Kentucky Statutes, § 790), but a similar right, if not duty, would exist without statute (Postal Co. v. No. Pacific Co. [C. C. A. 9] 211 Fed. 824, 827, 128 C. C. A. 350). Clearly, any method of keeping the right of way clear is likely to be somewhat more expensive, if there is standing upon it a line of poles to be taken into account. One of these methods is by fire, and the telegraph company offers to release the railroad company from any claim for injury to the poles by fire; but, in spite of such release, the railroad company must, for its own protection against the falling of poles upon its track, exercise great care to prevent the burning of a pole, and, as it would be liable only for negligence, this release does not seem important in the present computation of damages.

(f) Other additional expense of maintenance of way and structures and keeping track open. It is said that poles and wires obstruct ditch cleaning, that poles on a slope cause slides and washouts, that old ties and refuse cannot be so conveniently burned, and that fallen wires and fallen poles must be guarded against and removed.

(g) Any element of danger added to the railroad operations. This diminishes the value of the right of way for railroad purposes. If it is to be reasonably anticipated that poles may fall across the track, that telegraph wires may fall upon signal wires, and interrupt signals, or that the line of poles and cross-arms, particularly on a curve, may interrupt the enginemen's view of signals—all these under conditions which have not called for the removal of the telegraph company's poles and wires to positions of entire safety—this indicates a diminution in value for which the railroad should be compensated.

It is true that many of these elements touch upon the speculative, and yet they constitute the very considerations which the parties would rightfully take into account in negotiating a sale or lease or considering the offer which must precede condemnation; the payment of compensation cannot be postponed until the contingency happens, and the amount must be fixed now by the use of that sound judgment in estimating uncertainties which juries are commonly called upon to exercise.

[14] While it is necessary that both the witnesses and the jury should understand the facts in regard to these separate items and other similar ones, if other there are, upon which they may base opinions and verdict, yet, of course, the final question is as to the entire damages to be awarded as a unit. It may happen, as the record here suggests, that when elements of damage are taken separately and each considered by itself and fixed at an amount which the proof tends to support considering that element alone, yet that the sum total of all the amounts so reached will be so large as to be plainly unreasonable; and the jury may well be cautioned that it should

Digitized by Google

take proof or estimates of the specific elements of damage only as an aid in solving the general question how much the value of the railroad right of way as a whole is injured by the erection and maintenance of the telegraph line as a whole.

[15] 10. While it has often been held that the measure of damages, where an easement is condemned, is the difference between the value of the servient estate before and the value after the imposition of the easement, yet this is only a convenient formula. When it is applied to a case of fee title of property subject to sale, it is clear and simple; not so when applied to a railroad right of way which was not held for sale, and which had no market value either before or after condemnation. In such a case, the total of the acreage values of the railroad right of way will only be confusing. The important question is how much the condemned easement damages the right of way for use for all appropriate railroad purposes. No one can be more competent to testify on this subject than railroad men familiar with the cost and effect of every operation which is or may be involved. In the end, much of their testimony will be matter of opinion, but it is of the typical character where opinion evidence must be received because it is the best. It is not necessary that they know the value of the land, because this is not substantially involved; nor is it necessary that they should know former sales of similar rights, for perhaps there never have been any, and, if there have been, each sale was a matter of bargain depending on its own peculiar circumstances. Of course, telegraph men, familiar with actual construction and maintenance problems, would be competent witnesses, as far as their knowledge extended. For instructive application of these principles to conditions analogous to those now involved, see Sanitary District v. Pittsburgh Co., 216 Ill. 575, 583, 75 N. E. 248; Cochrane v. Com., 175 Mass. 299, 302, 56 N. E. 610, 78 Am. St. Rep. 491; Consolidated Co. v. Baltimore, 105 Md. 43, 54, 65 Atl. 628, 121 Am. St. Rep. 553.

[16] 11. The Kentucky statute, upon which the proceeding was based, is said to be unconstitutional for three reasons, viz.: (1) That a view of the premises was not permitted, whereby the owner was arbitrarily deprived of the best evidence of value; (2) that the title of the statute does not sufficiently express its subject, and (3) that it contemplates a final condemnation without notice to mortgagees. These three grounds are thought not to be covered by anything held by this court in Louisville Co. v. Western Union Co., supra., or by the Kentucky Court of Appeals in Louisville Co. v. Lang, 160 Ky. 702, 170 S. W. 2, in each of which decisions the statute was upheld against the contentions there urged. Regardless of whether the question of constitutionality is not res judicata between these parties, we are not impressed that these new objections are insuperable. The statute says "the jury shall not be required to go upon or view such right of way." Considering the very common practice in condemnation proceedings, as well as in all judicial controversies involving the value or condition of property, whereby the trier of fact is permitted, in the discretion of the court, to see the property (a practice recognized by other Kentucky

Digitized by Google

condemnation statutes), this provision should not be construed as depriving the court of all discretion to permit such view. Both its letter and its spirit are satisfied by holding that it intended that inspection and view of the premises should not be an essential prerequisite to a verdict. The Legislature hardly deliberated on the nice distinction—if there is any—between saying that the jury should not be required to view and saying that a view should not be required, and, with the latter form of words, "required" would naturally be taken as synonymous with "necessary." In many cases, a view of the property would be difficult, confusing, and not helpful; in many cases, it would be far the best possible evidence. The discretionary power of the trial court to permit or to refuse according to the nature of the case ought not to be destroyed, unless by the plainest language; and, to say the least, this language is not plain.

[17] As to the lack of sufficient title for the act, it is enough to say that the title is broad enough to include all provisions of the act, and that the failure of the title to indicate the means to be employed is not a defect so clearly fatal that we would be justified in overturning, on that ground, a statute which has been recognized and enforced by the Kentucky Court of Appeals.

[18] No mortgagee is complaining of lack of notice. If the telegraph company chooses to condemn and pay the award, and take the chance that it is not cutting off a prior right which may ripen into title through foreclosure, we do not see that the mortgagor is concerned in the constitutionality of the statute which expressly sanctions that practice. The Supreme Court has repeatedly refused to hear complaints about the constitutionality of a law, except from those who are hurt. Red River Bank v. Craig, 181 U. S. 548, 558, 21 Sup. Ct. 703, 45 L. Ed. 994; Jeffrey Co. v. Blagg, 235 U. S. 571, 576, 35 Sup. Ct. 167, 59 L. Ed. 364.

[19] 12. The court below had a preliminary trial, in the absence of the jury, in which it heard evidence and determined that there was necessity for the condemnation, and that the telegraph line, as proposed, would not interfere with the ordinary use of the railroad. The railroad company insists that, although trial by jury is not inherently necessary in condemnation cases, yet, under the Kentucky procedure, the form of a common-law trial rather than of an extrajudicial award has been adopted, and hence that the case is one where, by the federal Constitution and statutes, the trial must be by a jury. It is further insisted that the issues cannot be divided up, and part of them excluded from the jury trial.

We do not find it necessary to decide the question which the railroad company presents, so far as concerns the broad issues of necessity and of the forbidden, general interference. The undisputed facts here lead to the inevitable inference that whatever precedent general necessity the law contemplates was present, and that there would not be any such universal, necessary, and serious interference as would broadly forbid condemnation generally. St. Louis Co. v. Southwestern Co. (C. C. A. 8) 121 Fed. 276, 285, 286, 58 C. C. A. 198. Upon these issues it would have been the duty of the court to instruct the jury to find

Digitized by Google

for the telegraph company, and so it is quite immaterial whether the railroad company was entitled to a jury trial upon them.

[20] However, we infer from the record (the specific question has not been argued) that there are comparatively small fractions of the desired right of way as to which it may be reasonably claimed that the interference with the railroad use is too serious to permit condemnation. For illustration, there may be bridges or tunnels or other structures or short sections of the right of way already so fully occupied that there is no room for another telegraph line in addition to that to which the railroad is entitled for its own use—that is to say, where another line cannot be so placed that it will not substantially obstruct the use by the railroad of its right of way for some railroad purpose. It is not important to examine the details of the present record in this respect. Before another trial is had, conditions may have changed; and in view of the constant probability of such changes and the shifting character which we have ascribed to the easement to be condemned, the judgment finally entered will necessarily speak as of its date in fixing the specific location of the line of telegraph poles and in adjudging that particular location to be requisite; and a change in location thereafter could be demanded by the railroad only because of conditions later arising. Hence it appears that, upon the new trial, disputable questions of necessity—i. e., the forbidden degree of interference—may be found to exist as to specific locations here and there upon the line, regardless of whether the controlling conditions existed at the former trial or have arisen since. If the railroad company's telegraph line at these spots can be built—or, if already built, can be operated—with reasonable safety and without prohibitive expense, then an award of damages will meet the case; if not, these particular locations should be exempted from the condemnation. The judgment to be entered must also recognize the necessary change of location in all instances that have developed up to that time, where, under the principles which we have announced, the railroad had become entitled to require such change.

It is thus apparent that some aspects of the question, whether there must be a jury trial as to necessity for condemnation, or as to the existence of an obstruction to, or interference with, the railroad not rightly to be compensated in damages, are not eliminated, but remain to be decided, in spite of the fact that the effect of the decision will be applicable specifically, and not generally.

It has been expressly held that the right of jury trial secured by the Constitution does not necessarily extend to condemnation proceedings, which need not be in the nature of suits at common law (Bauman v. Ross, 167 U. S. 548, 593, 17 Sup. Ct. 966, 42 L. Ed. 270); but it is also held that, when the condemnation proceeding is put into the shape of a suit at law calling for the action of a court, it must be treated as a case which is removable (Madisonville Co. v. St. Bernard Co., 196 U. S. 239, 246, 25 Sup. Ct. 251, 49 L. Ed. 462), and as a suit at law in which the right to a jury to assess the damages or compensation is declared by R. S. § 566, U. S. Comp. St. 1916, § 1583 (Chappell v. U. S., 160 U. S. 499, 513, 16 Sup. Ct. 397, 40 L. Ed.

Digitized by Google

510). On the other hand, it is the approved practice, both in Kentucky (Warden v. Madisonville Co., 125 Ky. 649, 101 S. W. 914) and generally (American Co. v. St. Louis Co., 202 Mo. 656, 101 S. W. 576; Western Union Co. v. Louisville Co., 270 Ill. 399, 110 N. E. 583, Ann. Cas. 1917B, 670; Western Union Co. v. Louisville Co., 183 Ind. 258, 108 N. E. 951; Western Union Co. v. Nashville Co., 133 Tenn. 691, 182 S. W. 254; St. Louis Co. v. Southwestern Co., supra, 121 Fed. at page 285, 58 C. C. A. at page 207), unless the statute otherwise directs (e. g., section 8254, Mich. C. L. of 1915), that the question of necessity and similar precedent conditions should be decided by the court in advance of or separately from the jury trial concerning compensation. The Kentucky statute now involved plainly contemplates the practice, for the prescribed forms of oath and verdict relate to compensation only (see sections 4 and 6, supra);[5] and even in Chappell v. U. S., the trial court had determined the necessity before it summoned the jury (see 160 U. S. 502, 16 Sup. Ct. 398 [40 L. Ed. 510]), and this action was not questioned.[6]

We conclude that it is carrying the analogy too far to say that, because a condemnation proceeding is a suit at law within R. S. § 566 (C. S. § 1583), for some purposes, all parts of it must be so considered for all purposes. When we depart from the common-law forms and practice, there may be very distinct issues of fact in the same case, some of which are historically—and seem rightly—proper to be heard by jury and others of which are not. Finding the amount of compensation is another term for assessing damages, and this always has been a recognized function of a jury. The determination of whether there are instances of exception to the general necessity for condemnation in this case, and the exclusion of such fractions of the line, if there are any, from the general condemnation, require a flexibility of judgment and an adjustment of alternatives not peculiarly within the function of a jury as that function is fixed either by theory or by precedent. They approximate at least as closely, and perhaps more nearly, the customary powers of a court of equity. Considering the general—and so far as we know the invariable—practice (where not controlled by specific statute) that these precedent questions should be determined by the court separately from the assessment of damages and observing the lack of any authoritative decision to the contrary in the federal courts, we conclude that whatever trial is to be had concerning these specific locations should be—as it was on the trial under review—to the court and not to the jury.

The subject of compensation for the use of the rights now condemn-

[5] So far as the first part of the judgment form in section 7 intimates that the question of necessity went to the jury, it is not sufficient to overbalance the inference from the remainder of the statute.

[6] Perhaps this fact led the reporter to state in the syllabus (p. 499) that the only trial by jury required in such a condemnation as there involved was upon the question of damages, although the opinion does not consider the subject of a trial of the issue of necessity. The Fourth Circuit Court of Appeals, after a historical review, and in applying the constitutional right to jury trial, goes no further than to find the right to a jury to determine damages or compensation. Beatty v. U. S., 203 Fed. 620, 624–626, 122 C. C. A. 16.

Digitized by Google

ed and during the interval since the contract expired and the injunction was issued is not overlooked; but it is not distinctly presented by this record. We assume that it may hereafter arise in some form.

The proceedings upon the trial may be said to have been generally in accordance with the conclusions we have expressed; but it was otherwise in some vital particulars, and the finding of the court, the verdict of the jury and the judgment entered thereon must be set aside, and the case remanded for new trial upon the question of amount of compensation, and for such further hearing and decision upon the question of the forbidden interference in specific places as we have indicated may be open.

KNAPPEN, Circuit Judge. I concur, but with the qualification that I am not to be understood as recognizing that the telegraph company, after recovery in the condemnation proceeding and payment of compensation, is subject to liability of being ousted by the railroad company from the right of way, in whole or in part.

(249 Fed. 408)

E. I. DU PONT DE NEMOURS & CO. v. SMITH.*

(Circuit Court of Appeals, Fourth Circuit. January 15, 1918.)

No. 1585.

1. EXCEPTIONS, BILL OF ⟹43(1)—TIME FOR PRESENTATION AND ALLOWANCE.
   A bill of exceptions may be allowed by consent after the time fixed by order or rule of the District Court, and after the expiration of the term at which the case was decided.
2. EXCEPTIONS, BILL OF ⟹43(1)—FAILURE TO PRESENT WITHIN TIME GIVEN—WAIVER.
   On the entry of judgment for the plaintiff, the court made an order allowing defendant 30 days in which to present a bill of exceptions; there being no standing rule on the subject. The bill was not presented until after the 30 days, and after the term of court had expired, when it was signed by the judge; plaintiff making no objection, but signing a stipulation as to what should constitute the record in the appellate court. The writ of error was signed on the same day. *Held* that, under such facts, the writ of error would not be dismissed on the ground that the bill was not signed within the time fixed by the order.
3. APPEAL AND ERROR ⟹780(1)—GROUNDS FOR DISMISSAL—INADVERTENCE OF COUNSEL.
   The extreme penalty of dismissal of a cause by an appellate court without a hearing on the merits should not be imposed upon a litigant because of the inadvertence of his counsel, except in cases of flagrant neglect, or where the court is compelled by statute or clearly established practice to do so.

   Pritchard, Circuit Judge, dissenting.

In Error to the District Court of the United States for the Eastern District of Virginia, at Richmond; Edmund Waddill, Jr., Judge.

Action at law by Leslie C. Smith, an infant, by M. H. Smith, his next friend, against E. I. Du Pont de Nemours & Co. Judgment for plaintiff, and defendant brings error. On motion to dismiss writ of error. Denied.

⟹For other cases see same topic & KEY-NUMBER in all Key-Numbered Digests & Indexes

*Rehearing denied July 29, 1918.

Digitized by Google

L. O. Wendenburg, of Richmond, Va., for the motion.

J. Gordon Bohannan, of Petersburg, Va. (Plummer & Bohannan, of Petersburg, Va., on the briefs), opposed.

Before PRITCHARD, KNAPP, and WOODS, Circuit Judges.

WOODS, Circuit Judge. This is a motion to dismiss a writ of error on the ground that the bill of exceptions was not presented and signed within the time fixed by the order of the District Court. Judgment was entered against the defendant on the 3d of August, 1917. In the absence of a fixed rule on the subject, the District Judge made an order allowing the defendant 30 days thereafter in which to present his bill of exceptions. On the 27th of August defendant's attorney wrote to the plaintiff's attorney, inclosing a proposed order for an extension of 10 days after the adjournment of the term of the court. Having received no answer, on September 3d he wrote another letter, requesting that consent be indorsed on the proposed order. No reply was made to either of these letters; the plaintiff's attorney in his affidavit saying that the letters were not received, and defendant's attorney saying that he inferred from the failure to respond that the plaintiff's attorney had consented to the enlargement of the time. After the term had ended, on the 2d of October, 1917, the bill of exceptions was presented to the District Judge and signed by him in the presence of counsel for the plaintiff. At the same time counsel for plaintiff signed a stipulation as to what should constitute the record for the Circuit Court of Appeals. The writ of error was signed on the same day.

[1] When the time within which an act necessary to bring a cause to this court by writ of error or appeal is fixed by statute, this court has no power to relieve against the failure to comply with the statute, and the District Court has no power to take any steps looking to the perfection of an appeal or writ of error after it has lost jurisdiction. Hence, if the writ of error had not been granted in this case within six months, this court would be obliged to dismiss it. Old Nick Williams Co. v. United States, 215 U. S. 541, 30 Sup. Ct. 221, 54 L. Ed. 318. It is settled beyond question, however, that a bill of exceptions may be allowed by consent after the time fixed by order or rule of the District Court and after the expiration of the term at which the case was decided. Waldron v. Waldron, 156 U. S. 361, 15 Sup. Ct. 383, 39 L. Ed. 453; Jennings v. Philadelphia, etc., Co., 218 U. S. 255, 31 Sup. Ct. 1, 54 L. Ed. 1031. It follows from this holding that the District Court does not completely lose its jurisdiction after the expiration of the term, for, if it did, consent would not avail. The case first cited lays down the rule that if the bill of exceptions be allowed after the time fixed, either by consent or by an order of the court, and after the expiration of the term, it will be sufficient unless the point was expressly saved by objection made at the time to the allowance.

[2] In this case, after the expiration of 30 days fixed by the order, and after the expiration of the term, the bill of exceptions was allowed

Digitized by Google

by the District Court, and it does not appear in the record that any objection was made by counsel for defendant in error to the allowance. Unless, therefore, the case of Waldron v. Waldron, supra, has been overruled, the defendant in error cannot avail himself of the failure of the counsel for the plaintiffs in error to have the bill of exceptions signed within 30 days and before the expiration of the term. The authority of the Waldron Case to this effect was expressly recognized in Old Nick Williams Co. v. United States, 215 U. S. 541, 30 Sup. Ct. 221, 54 L. Ed. 318. These cases are not overruled, either expressly or impliedly, by Jennings v. Philadelphia, etc., Co., supra. There the appeal had been allowed and perfected. The Supreme Court of the District of Columbia had thus lost control and jurisdiction of the case by its removal to the Supreme Court of the United States. That the case is thus distinguished from Waldron v. Waldron, supra, and the case now before us, is obvious from this language of the court:

"The proceeding was coram non judice. The appellee was not in court, or before a court. The judge and the court had lost all power over the cause, the parties, and the record."

Under these circumstances the court held that the failure of the appellee to object to the allowance of the bill of exceptions could not avail the appellant, evidently for the reason that the cause was no longer in the lower court. The court says:

"So grave a matter as the allowance of a bill of exceptions after the close of the term and after the court had lost all judicial power over the record should not rest upon a mere implication from silence. There should be express consent, or conduct which should equitably estop the opposite party from denying that he had consented."

We think it clear, therefore, that the Supreme Court of the United States did not intend, in Jennings v. Philadelphia, etc., Co., supra, to overrule, without mentioning, the important case of Waldron v. Waldron, supra. The distinction is that in the latter case, as in this case, the District Court had not lost its control of the case by the perfection of the writ of error or appeal, while in the Jennings Case the Supreme Court of the District of Columbia had lost its control by the allowance and perfection of the appeal to the Supreme Court.

The evidence of consent to the allowance of the bill of exceptions and waiver of the time is very strong. The record does not show that any objection was made. The signing of the stipulation by counsel for plaintiff as to what should constitute the record, without the reservation of any technical rights, goes far to show waiver of all irregularities that were not jurisdictional. The case is thus even stronger against the defendant in error than was the case of Waldron v. Waldron, supra.

[3] We have the strong conviction that the extreme penalty of dismissal of a cause without a hearing on the merits should not be imposed upon a litigant for the inadvertence of his counsel, except in flagrant cases of neglect, or where the court is compelled by statute or clearly established practice to do so. In such cases orderly procedure may be well maintained by the infliction of the penalty of costs on the defaulting party or his attorney.

Digitized by Google

In our opinion, therefore, the motion to dismiss should be denied, but upon the condition that the counsel for the plaintiff in error pay the sum of $50 for costs of this motion as a penalty for his inadvertence.

Motion denied.

PRITCHARD, Circuit Judge (dissenting). I regret exceedingly that I cannot concur in the action of the majority of the court in refusing to grant the motion to dismiss the writ of error in this case. The judgment complained of was rendered by the District Court of the United States for the Eastern District of Virginia in this cause on the 3d day of August, 1917, at the April term, 1917, of the court, which term of court expired on the 29th day of September, 1917, when an order was entered adjourning and ending this term of the court; that on the 1st day of October, 1917, a new term, known as the October term, 1917, of that court, began; that on the 3d day of August, 1917, the day on which the judgment complained of was entered the court entered an order as follows:

"Memorandum. During the progress of the trial of the above-styled case the defendant by its attorney noted sundry exceptions to the rulings, action, and judgment of the court, and leave is given it to file its bills of exceptions within 30 days from this date."

While it appears that the lower court had no standing rule, nevertheless this order was tantamount to a rule of the court as respects this case. The plaintiff in error not only failed to file or have the judge of the lower court sign the bills of exceptions, or any of them, within the time prescribed by the order, but also failed to do this at any time during the April term of the court. However, on the 2d day of October, 1917, this being the second day of the October term, the defendant below filed, and the District Court signed for the first time, each and all of said bills of exceptions without the consent of the plaintiff below. As we have stated, it appears that there was no rule or practice of the court below under which bills of exceptions could have been signed at the October term, unless further time had been granted during the April term; and it further appears that no order was entered at the April term of the court enlarging the time within which bills of exceptions might be filed. I find nothing in the record to justify the contention that these bills of exceptions were signed by consent. The term of court having expired, without the time having been extended within which to file bills of exceptions, the court had no authority to permit the bills of exceptions to be filed.

In the case of Reliable Incubator & Brooder Co. v. Stahl, 102 Fed. 590, 42 C. C. A. 522, the Circuit Court of Appeals for the Seventh Circuit in a per curiam opinion, among other things, said:

"* * * The document sought to be brought up is not mentioned in the bill of exceptions, was in no way made a part of the record, and, if contained in the transcript, could be of no more significance upon the motion to strike out the bill of exceptions than when satisfactorily proved by affidavit. There can be no doubt that the paper was sent by counsel for the defendant in error to the clerk of the court, and it was perhaps placed on file; but the assertion that it was filed by plaintiff's attorney on July 13th, besides being

Digitized by Google

an evident mistake, is not clearly consistent with the statement in one of the affidavits 'that the court then and there signed the bill of exceptions, without objection being made or exceptions taken.' On the entire showing, it is evident that the attorneys for the defendant in error, at the time the bill was filed, and possibly until they came to examine the printed transcript, believed that there had been a regular extension of time for the signing and filing of the bill. It is certain that on July 3d they learned of the extension ordered three days before, and not unnaturally they may have assumed that that order was made within the time of a previous extension which had been duly ordered. Their mistake in that respect, however, did not alter the fact that during the term at which the judgment was rendered no order was entered allowing time beyond the term for signing and filing the bill, and did not place the plaintiff in error in a worse position than if the specific objection to the signing of the bill had been interposed at the time of signing. There is no proof which tends even remotely to show a purpose to waive the objection, or to consent to the signing of the bill out of proper time. When, during the term at which a judgment is rendered, it is proposed to allow time beyond the term for the filing of a bill of exceptions, it is well that a notation of the fact be made upon the docket of the court, or by an entry upon the order book; but when, after the term, the bill is presented for signature, it should contain an explicit statement of the extension, such as to demonstrate that both the signing and the filing are within the time allowed, or, if a waiver of the time is to be asserted, a distinct statement of the fact of consent by counsel or party present at the time of signing, or, what would be still better, a written agreement indorsed upon or attached to the bill showing that consent. Under no ordinary circumstances, if at all, will affidavits be received to show such consent—certainly not when the fact is disputed, as it is here. Indeed, it is not clear that consent after the expiration of the term is available. In Waldron v. Waldron, 156 U. S. 361, 378, 15 Sup. Ct. 387, 39 L. Ed. 457, it is said, 'The signing of the bill of exceptions after the expiration of the term at which the judgment was rendered was lawful, if done by consent of parties, given during that term.' It may be, however, that the cases cited do not go that far. Hunnicutt v. Peyton, 102 U. S. 333, 26 L. Ed. 113; Davis v. Patrick, 122 U. S. 138, 7 Sup. Ct. 1102, 30 L. Ed. 1090. * * * The suggestion that, by the order giving time for the preparation and filing of the transcript of the record in this court, the Circuit Court retained jurisdiction of the case for the purpose of signing the bill of exceptions, is manifestly untenable. The motion to strike out is sustained."

In Preble v. Bates (C. C.) 40 Fed. 746, the court said:

"* * * I conceive the rule to be this: That a bill of exceptions must be signed at the term in which judgment was rendered. This rule is subject to certain exceptions, dependent upon special circumstances, which, however, it is not necessary to consider in this case. * * *"

Also in the case of Reader v. Haggin, 160 Fed. 909, 88 C. C. A. 91, the Circuit Court of Appeals for the Second Circuit, said:

"* * * This court has repeatedly held that after the expiration of the term at which the cause was tried, unless the court reserves control over the case by rule or order, it is too late to allow a bill of exceptions. * * *"

In the case of United States v. Jones, 149 U. S. 262, 13 Sup. Ct. 840, 37 L. Ed. 726, the bills of exceptions were signed after the final adjournment of the court for the term at which the judgment was rendered. In discussing this phase of the question the Chief Justice said:

"* * * No order was entered extending the time for its presentation, nor was there any consent of parties thereto, nor any standing rule of court which authorized such approval. The bill of exceptions was, therefore,

Digitized by Google

improvidently allowed. Muller v. Ehlers, 91 U. S. 249 [23 L. Ed. 319]; Jones v. Grover & Baker Sewing Machine Co., 131 U. S. Appx. cl [24 L. Ed. 925]; Michigan Insurance Bank v. Eldred, 143 U. S. 293 [12 Sup. Ct. 450, 36 L. Ed. 162]. As the errors assigned arise upon the bill of exceptions, we are compelled to affirm the judgment; and it is so ordered."

Oxford & Coast Line R. Co. v. Union Bank of Richmond, Va., 153 Fed. 723, 82 C. C. A. 609, is very much in point. In that case this court said:

"* * * In the absence of a rule to the contrary, a party against whom there is a judgment in an action at law is entitled to prepare and file a bill of exceptions during the term at which the case was tried relating to questions reserved at the trial. However, in the district in which this case was tried there is a rule of court which only allows 20 days in which to prepare and file a bill of exceptions. Notwithstanding this rule, the court had the power to extend the time in which to prepare and file a bill of exceptions, provided it did so within the 20 days; but, once the court permitted the 20 days to expire, then it no longer had the power to extend the time, and the case would stand just as though the term had expired. This court, in the case of Yellow Poplar Lumber Co. v. Chapman, 74 Fed. 448, 20 C. C. A. 507, in commenting on the practice as to bills of exceptions, among other things, said: 'It is now a rule of practice universally followed in the courts of the United States that an exception to the ruling of a trial judge cannot be considered in the appellate court, unless it was duly noted during the trial, and preserved in a bill of exceptions, which was presented to and allowed by the court at the term during which the trial was had, or within a time provided for by an order entered during such term, or where it has been allowed under the standing rules of the court, or with the consent of the parties, or under such circumstances as clearly show that it was the intention of the court to, and that it did, retain by special order the control of the matter, for the purpose of examining, allowing, and signing the bill of exceptions.' * * *"

Mr. Justice Blatchford, in the case of Chateaugay Ore & Iron Co., Petitioner, 128 U. S. 552, 9 Sup. Ct. 152, 32 L. Ed. 508, in commenting on the rules of the Circuit Court for the Southern District of New York relative to the time allowed for the presentment, allowance, and signing of bill of exceptions, said:

"* * * And if the party omit to make a bill within the time above limited, unless the same shall be enlarged as aforesaid, he shall be deemed to have waived his right thereto."

The neglect of counsel for plaintiff in error cannot be said to be excusable, in view of the facts as they appear in the records. It should be borne in mind that counsel for plaintiff in error lived in Petersburg, within 40 minutes' ride of the office of the clerk of the District Court; but he failed to appear before the court below for the purpose of filing his bills of exceptions within the 30 days' time granted him in the court's order of August 3d. He simply contented himself by writing counsel for defendant in error, asking consent for a further extension of time, and admits that he never received any reply to these letters. Failing to hear from counsel for defendant in error, it was the duty of counsel for plaintiff in error to see counsel for defendant in error, who lived in Richmond, in person; but this he failed to do. If he had done so, no doubt opposing counsel would at that time have agreed to a further extension of time.

Digitized by Google

The rules as respect the preparation of a case to be brought here on writ of error are plain and explicit—having been interpreted by almost every Circuit Court of Appeals, as well as the Supreme Court, and it must be assumed that counsel are fully cognizant of their requirements. A failure to observe the same in a case like this can only tend to confusion and must ultimately lead to a demoralization of the procedure of this court. Mr. Justice Story, in his work on Equity Pleading (section 544), in commenting on the necessity of adhering strictly to the prescribed forms of procedure, says:

"The want of due form constitutes a just objection to the proceedings in every court of justice, for to reject all form would be destructive of the law as a science, and would introduce great uncertainty and perplexity in the administration of justice. Every irregularity of this sort is fraught with inconvenience, and generally tends to delays and doubts. And it has been well remarked that infinite mischief has been produced by the facility of courts of justice in overlooking errors of form. It encourages carelessness and places ignorance too much on a footing with knowledge amongst those who practice the drawing of pleadings."

In the case of Oxford & Coast Line R. Co. v. Union Bank of Richmond, Va., supra, this court also said:

"* * * While it is not the policy of the court to dismiss writs of error and cases on appeal on account of slight technicalities, at the same time the rules of this court, as well as the rules of the Circuit Court, are plain and easily understood. In this instance the provision of the statute relating to the question at issue is mandatory and must be enforced. It is incumbent upon attorneys who practice in the federal courts to observe and strictly follow the rules of practice and procedure in preparing and presenting bills of exceptions. In the case of Michigan Ins. Bank v. Eldred, 143 U. S. 298, 12 Sup. Ct. 452, 36 L. Ed. 162, the court, among other things, said: 'The duty of seasonably drawing up and tendering a bill of exceptions, stating distinctly the rulings complained of and the exceptions taken to them, belongs to the excepting party, and not to the court. The trial court has only to consider whether the bill tendered by the party is in due time, in legal form, and conformable to the truth; and the duty of the court of error is limited to determining the validity of exceptions duly tendered and allowed.' It is essential to the orderly procedure of the courts that attorneys should comply with the rules relating to the same; otherwise, it would be useless to promulgate rules for the guidance of those who may seek to review the action of the lower court."

Therefore, it appearing that the bills of exceptions were not filed within the time granted by the court, and it further appearing that the time was not extended by consent, it follows that this court should have granted the motion to dismiss the writ of error.

In view of the court's refusal to dismiss the writ of error, I confess that I cannot understand why counsel for defendant in error should be required to pay the sum of $50 as a penalty, inasmuch as the court has found that counsel is only guilty of excusable neglect.

For the reasons stated, I think the court should have granted the motion to dismiss.

Digitized by Google

(249 Fed. 410)

In re PHŒNIX HARDWARE CO.

LONG et al. v. CHRISTY.

(Circuit Court of Appeals, Ninth Circuit. March 5, 1918. Rehearing Denied May 13, 1918.)

No. 3011.

1. CORPORATIONS ⟹89(1)—STOCKHOLDERS—LIABILITY.
   Where corporate stock was issued without subscription, the stockholders are liable to assessment, just as if they had been subscribers.
2. CORPORATIONS ⟹228—UNPAID SUBSCRIPTIONS—LIABILITY.
   A corporation's unpaid subscriptions are a trust fund for the benefit of the general creditors of the corporation, and may be reached on the insolvency of the corporation.
3. CORPORATIONS ⟹232(1)—STOCKHOLDERS—LIABILITY.
   Organizers of a corporation, who delivered to it a stock of goods and in exchange received the capital stock of the corporation, are, the value of the stock of goods being very much less than the par value of the capital stock, liable to general corporate creditors for the difference, though the transaction as between themselves and the corporation could not be questioned.
4. CORPORATIONS ⟹268(5)—PETITION TO ASSESS STOCK.
   Where the petition of the trustee of a bankrupt corporation, seeking to assess the outstanding capital stock on the theory that it had not been fully paid in, alleged that the holders were subscribers, and the proof showed that the stock was issued without subscription, the variance was immaterial; the liability of the stockholders being the same in each case.
5. LIMITATION OF ACTIONS ⟹66(4)—RUNNING OF STATUTE—BALANCES DUE ON UNPAID CAPITAL STOCK.
   Balances due upon unpaid capital stock of a corporation do not become payable, so as to start the running of limitation, until there has been a call or assessment.
6. CORPORATIONS ⟹246—STOCKHOLDERS—LIABILITY.
   The liability of a subscriber for the capital stock of a corporation is several, and not joint.

Appeal from the District Court of the United States for the District of Arizona; William H. Sawtelle, Judge.

In the matter of the bankruptcy of the Phœnix Hardware Company, a corporation. Petition by Charles B. Christy, as trustee in bankruptcy, against J. B. Long and others, to assess the outstanding capital stock of the bankrupt corporation. A decree of the referee levying an assessment was affirmed on review to the District Court, and the defendants, stockholders, appeal. Modified and affirmed.

This is a proceeding instituted in the bankruptcy court to assess the outstanding capital stock of the bankrupt corporation, the Phœnix Hardware Company, for the purpose of raising funds with which to pay the creditors of the bankrupt concern. The Phœnix Hardware Company was incorporated March 19, 1907, with a capital of $50,000, consisting of 500 shares, at a par value of $100 each. The board of directors was to consist of three stockholders, to be elected annually; the following named persons being designated in the articles to serve as directors until their successors were elected, to wit: J. B. Long, J. W. Long, and M. West. On the same day that the articles of incorporation were executed, the board of directors held a meeting, at which J. B. Long was elected president, J. W. Long secretary, and W. J. Kingsbury

⟹For other cases see same topic & KEY-NUMBER in all Key-Numbered Digests & Indexes

Digitized by Google

statutory agent. Subsequent to this time there were never any meetings held, either of the stockholders or of the directors, of which minutes were kept or recorded. In fact, no other board of directors was ever elected than that named in the articles of incorporation.

Immediately prior to the organization of this company, a few days perhaps, J. B. Long and M. West purchased a stock of goods from the Arizona Hardware & Vehicle Company, an insolvent concern, for the sum of $9,950, or near that figure, the invoice value of which was about $20,000. This stock was turned over to the Phœnix Hardware Company in consideration of the entire capital stock of the company, and the stock was issued as follows, as shown by the stock books:

To M. West	250	shares.
J. B. Long	130	"
J. W. Long	80	"
Margaret M. Long	40	"

The referee finds that the subscribers to the capital stock paid $10,000 for the entire capital stock of the company, that by agreement the amounts paid on the subscriptions by each of the subscribers were credited thereon, and the balance unpaid of the par value of the stock was in effect credited by discount, and that the stock account between the bankrupt corporation and the subscribers was balanced. In pursuance of his findings, the referee levied an assessment upon the capital stock of the company of 33 per cent. allowing credits to the subscribers in amounts equal to the proportion of $10,000 each had paid and was credited with on the stock books, and entered a several order against each of the stockholders requiring payment of the sum found due upon the assessment. Upon review to the District Court, the orders and decrees of the referee were affirmed in all particulars, except that the stockholders were rendered jointly and severally liable for the several amounts found due under the assessment. The stockholders have prosecuted an appeal to this court.

W. J. Kingsbury, of Tempe, Ariz., and Joseph S. Jenckes and Struckmeyer & Jenckes, all of Phœnix, Ariz. (Metson, Drew & MacKenzie and E. H. Ryan, all of San Francisco, Cal., of counsel), for appellants.

J. C. Forest, of Phœnix, Ariz., for appellee.

Before GILBERT and HUNT, Circuit Judges, and WOLVERTON, District Judge.

WOLVERTON, District Judge (after stating the facts as above). [1] Appellants insist that there were no subscriptions to the capital stock of the Phœnix Hardware Company, and that the entire capital stock having been exchanged for the stock of merchandise, it was not liable to assessment for payment of the debts of the corporation.

As to the subscriptions, it is probably true that there were none such made in name, but there is no doubt that the stock was issued to the parties named and they became the holders thereof. As such holders, they would become equally liable for the payment of calls upon the stock as if they were originally subscribers thereto. A subscriber agrees to take and pay for the shares as calls are made, and a holder is liable for the calls until the stock is fully paid. So the objection that the holders of the stock were not subscribers, or even that the stock was never subscribed, is without merit. The stock was issued, and the liability arises in either event.

[2, 3] It is urged that at common law corporation creditors cannot hold stockholders liable on stock issued for property. Whatever

Digitized by Google

it may be, we need not discuss nor determine the rule at common law in this regard. A doctrine has been established in the United States which is altogether sufficient for resolving the present controversy. We refer to what has been termed the "trust" doctrine as applied to unpaid subscriptions on the capital stock of a corporation. The Supreme Court, in Sawyer v. Hoag, 17 Wall. 610, 620 (21 L. Ed. 731), says:

"Though it be a doctrine of modern date, we think it now well established that the capital stock of a corporation, especially its unpaid subscriptions, is a trust fund for the benefit of the general creditors of the corporation. And when we consider the rapid development of corporations as instrumentalities of the commercial and business world in the last few years, with the corresponding necessity of adapting legal principles to the new and varying exigencies of this business, it is no solid objection to such a principle that it is modern, for the occasion for it could not sooner have arisen."

So in Sanger v. Upton, Assignee, 91 U. S. 56, 60 (23 L. Ed. 220), the court said:

"The capital stock of an incorporated company is a fund set apart for the payment of its debts. It is a substitute for the personal liability which subsists in private copartnerships. * * * It is publicly pledged to those who deal with the corporation, for their security. Unpaid stock is as much a part of this pledge, and as much a part of the assets of the company, as the cash which has been paid in upon it. Creditors have the same right to look to it as to anything else, and the same right to insist upon its payment as upon the payment of any other debt due to the company."

The doctrine has subsequently been reaffirmed in several cases. County of Morgan v. Allen, 103 U. S. 498, 26 L. Ed. 498; Scovill v. Thayer, 105 U. S. 143, 26 L. Ed. 968; Hawkins v. Glenn, 131 U. S. 319, 9 Sup. Ct. 739, 33 L. Ed. 184; Richardson's Executor v. Green, 133 U. S. 30, 10 Sup. Ct. 280, 33 L. Ed. 516; Camden v. Stuart, 144 U. S. 104, 12 Sup. Ct. 585, 36 L. Ed. 363.

Some limitation has been impressed upon the doctrine by later adjudications, and, as now interpreted, it relates to the capital stock or assets of a corporation that has either suspended its business or has become insolvent, and whose assets have been placed in a court of equity, or other proper tribunal, and are in the course of administration for final settlement and distribution. 4 Thompson on Corporations (2d Ed.) § 3431; Hollins v. Brierfield Coal & Iron Co., 150 U. S. 371, 14 Sup. Ct. 127, 37 L. Ed. 1113.

In Scovill v. Thayer, supra, it was held, among other things, that a contract of a corporation with its stockholders that they should never be called upon to pay any other assessment than that paid at the outset, while good as between the corporation and the stockholders, was a fraud in law upon creditors, which could be set aside whenever their rights intervened and their claims were unsatisfied.

Clark v. Bever, 139 U. S. 96, 11 Sup. Ct. 468, 35 L. Ed. 88, is relied upon as supporting appellants' position. This case, along with Fogg v. Blair, 139 U. S. 118, 11 Sup. Ct. 476, 35 L. Ed. 104, and Handley v. Stutz, 139 U. S. 417, 11 Sup. Ct. 530, 35 L. Ed. 227, is referred to in Camden v. Stuart, supra, and the court says of them that they were not intended to overrule or qualify in any way

Digitized by Google

the wholesome principle adopted by the court in the earlier cases, and that they were only intended to draw a line beyond which the court was unwilling to go in fixing liability upon those who had purchased stock of a corporation, or had taken it in good faith in satisfaction of their demands.

Now, to apply the principle thus ascertained in the present case: The stock of merchandise of an insolvent concern was purchased by J. B. Long and M. West for $9,950. Immediately the Phœnix Hardware Company was incorporated, with a capital stock of $50,000, and the merchandise stock was turned into the company, in exchange for the whole of its capital stock. A board of directors was named in the articles of the corporation, and nothing else was done, except that it is shown that the articles were filed with the county recorder and the territorial auditor. The stock was issued, one half to M. West and the other half distributed among J. B. Long and his family. While the agreement to exchange $50,000 of capital stock for a stock of merchandise purchased for less than $10,000 would be binding as between the company and the stockholders, such an arrangement cannot always stand the test when the creditors are to be considered, and especially when the corporation has been overtaken by insolvency and bankruptcy. The creditors, when extending credit to the company had a right to believe that the concern had a bona fide capitalization of $50,000. With such a capitalization, it had the air of a big business concern, calculated to attract large credit. J. B. Long and M. West might have started business with the stock of merchandise when they purchased it. In that event, they would have been personally liable to their business creditors. By a promotion of the incorporation of the hardware company, and a turning of the business over to it, which was really all they did, they shifted that liability to the company, and relieved themselves.

Now, if it were designed that the company should start with a business capital equal only to the value of the stock of merchandise, it would have been fair to prospective creditors so to represent by capitalizing the company at that amount. Such a course of transaction could not have been characterized as a false representation to creditors. What these parties did, though in promoting the project, was to capitalize the concern at more than five times the value of the stock of merchandise, and then to accept the stock in payment thereof. Thus they constructed, apparently, a very substantial and reliable business entity, and so represented it to the business world. Yet they attempt to escape all stock liability by saying that they took the stock over as fully paid up in exchange for the stock of merchandise. Such a project or scheme is a fraud at law upon the prospective creditors of the corporation, and when the corporation is found to be insolvent the stockholders cannot be heard to say that their stock has been fully paid up. The unpaid stock must be regarded as a trust fund for the benefit of the creditors until they are themselves fully paid. The referee was right in allowing the value of merchandise as payment on the capital stock, but beyond that the stock was liable to assessment.

Nor do the cases of Coit v. Gold Amalgamating Co., 119 U. S. 343, 7

Digitized by Google

Sup. Ct. 231, 30 L. Ed. 420, and Bank of Ft. Madison v. Alden, 129 U. S. 372, 9 Sup. Ct. 332, 32 L. Ed. 725, help the appellants. In the former, property of the estimated value of $137,000 was put into the company in payment of $100,000 par value of stock. The court said in that case:

"If it were proved that actual fraud was committed in the payment of the stock, and that the complainant had given credit to the company from a belief that its stock was fully paid, there would, undoubtedly, be substantial ground for the relief asked. But where the charter authorizes capital stock to be paid in property, and the shareholders honestly and in good faith put in property instead of money in payment of their subscriptions, third parties have no ground of complaint."

In the latter case it was simply held that a stockholder in an insolvent corporation, who has paid his stock subscription in full by a transfer of a tract of land, in good faith and at an agreed value, for the use of the company's business, is not liable in equity to a creditor of the corporation, who had knowledge of and assented to the transaction at the time when it took place, solely on the ground that the land turned out to be less valuable than was agreed upon.

Emphasis is laid by appellants upon the declaration by these authorities that actual fraud must be shown. It must be observed that the cases lay stress upon the good faith of the transaction as well. In the present case, the very project devised bears the impress of actual fraud, and is so flagrant as to dispel all idea of good faith. The suggestion that the capital stock was of no value at the time is without force. It constituted the measure of the capitalization of the company, and this is really what was important from the standpoint of persons who were asked to extend credit to the company.

[4] These considerations also dispose of the error assigned to the court's ruling in overruling the demurrer to the petition. If there was any irregularity relating to the petition, it was that there was a variance between the proofs and the allegation. The petition alleges a subscription. The proofs show that the stock was issued without the formality of a subscription. The stockholders were rendered liable in either event, so the variance was immaterial.

[5] The next assignment of error relates to the statute of limitations. Balances due upon unpaid capital stock do not become due and payable until there has been a call or assessment. The call in the present case was made by the referee in bankruptcy well within the period of the Arizona statute of limitations, and hence the statute has not run. This conclusion is so well within the case of Scovill v. Thayer, supra, which was concerning a bankruptcy matter, that it is unnecessary to discuss the question further than to cite the case.

The point made that the trustee had not collected the outstanding bills receivable is without merit. He made reasonable effort to collect them, and was unable to do so, except in slight measure.

[6] An objection is made to the decree that it is joint and several against all the stockholders. The order and decree of the referee in bankruptcy was several only, and the District Court by its decree rendered the liability joint and several against all. In this the court was in error. "The liability of a subscriber for the capital stock of a com-

Digitized by Google

pany is several, and not joint." Hatch v. Dana, 101 U. S. 205, 210, 25 L. Ed. 885. See, also, Converse v. Hamilton, 224 U. S. 243, 32 Sup. Ct. 415, 56 L. Ed. 749, Ann. Cas. 1913D, 1292, and 10 Cyc. 679.

The decree of the District Court will be modified to conform to this holding; otherwise it will be affirmed, with costs in this court to appellants.

(249 Fed. 415)

FAY v. HILL et al.

(Circuit Court of Appeals, Eighth Circuit. February 23, 1918.)

No. 4869.

1. EQUITY ⟹220, 362—TRIAL ⟹11(3)—BILLS—GROUNDS FOR DEMURRER—ADEQUATE REMEDY AT LAW.

Under equity rule 22 (198 Fed. xxiv, 115 C. C. A. xxiv), the fact that there is a complete and adequate remedy at law is no ground for demurrer or motion to dismiss a bill, but the proper procedure is to move to transfer it to the law side.

2. TRIAL ⟹11(3)—TRANSFER—WAIVER.

Failure to move to transfer a bill to the law side on the ground that there is a complete and adequate remedy at law, and proceeding to a hearing, is a waiver of the objection.

3. APPEAL AND ERROR ⟹1046(1)—FAILURE TO TRANSFER EQUITY CASE—HARMLESS ERROR.

Where a bill to cancel a contract of a sale, on which the buyer had already begun an action, at least stated an equitable defense, it was immaterial that the bill was not transferred from the equity side, for, had it been transferred and treated as an answer to the action at law, it would have been disposed of by the court sitting as a chancellor before the trial of the action at law to the jury.

4. TRIAL ⟹4—EQUITABLE DEFENSE—DISPOSITION.

Where an equitable defense is interposed in an action at law, it will have to be disposed of by the court sitting as a chancellor before the trial of the action at law to the jury.

5. CANCELLATION OF INSTRUMENTS ⟹32—JURISDICTION OF EQUITY.

A bill seeking to cancel a contract of sale on the ground that it was obtained by fraud and deception, and that the minds of the parties had never met, states a case for equitable relief.

6. APPEAL AND ERROR ⟹1009(1, 4)—REVIEW—EQUITY CASES—FINDINGS OF FACT.

In an equity case, findings of fact of the trial judge, who heard the testimony, are entitled to high consideration, and unless clearly against the weight of the evidence, or induced by mistaken view of the law, will not be disturbed by the appellate court.

7. SALES ⟹45—FRAUD—WHAT CONSTITUTES.

As misrepresentations may be as well by artifices to mislead or concealment as by positive assertions, an individual, who for speculative purposes attempted to buy linseed oil for future delivery over a long period of time, must be deemed guilty of fraud, warranting cancellation of the contract, where he was insolvent and transacted his business under a purported corporate name, indicating a capital and commercial rating.

8. SALES ⟹36—MEETING OF MINDS.

Where through telegraphic correspondence an individual acting under a purported corporate name bought linseed oil in large quantities for future delivery, and the seller, though diligent in making inquiry, acted under the mistaken belief that the buyer was a corporation of resources,

---

⟹For other cases see same topic & KEY-NUMBER in all Key-Numbered Digests & Indexes

Digitized by Google

there was no meeting of the minds, and the seller, having been diligent, was entitled to rescind the contract.

9. EQUITY ⟹13—GROUNDS—HARDSHIP.
When hardship amounting to injustice would be inflicted on a party by holding him to his apparent bargain, it is within the jurisdiction of equity to relieve him.

10. SALES ⟹418(4)—BREACH—DAMAGES.
A purchaser of linseed oil for future delivery cannot, the seller having canceled the contract, recover damages in an action at law, where at the time of the cancellation the market price of the oil was less than the contract price.

11. EQUITY ⟹39(1)—JURISDICTION—SCOPE.
A court of equity, having obtained jurisdiction of a suit wherein cancellation of contract of sale was sought, will retain the jurisdiction to dispose of all controversies between the parties arising out of the transaction.

Sanborn, Circuit Judge, dissenting.

Appeal from the District Court of the United States for the Eastern District of Missouri; David P. Dyer, Judge.

Bill by Hugh Hill and Eugene Taylor, doing business as Edward Hill's Son & Co., against William Fay. From a decree for complainants, defendant appeals. Affirmed.

This is an appeal from a decree declaring two contracts between the parties to this action void, and enjoining the prosecution of an action at law based upon these contracts. The facts, briefly stated, are that the appellant was a civil engineer, residing in the city of St. Louis, without any commercial rating, and without any means, except a homestead, which was subject to a mortgage for nearly its full value; that in May, 1910, one Eberson, a manufacturer of paints, decided to enter the business of manufacturing linoleum, using a pigment, which he supposed would enable him to manufacture it successfully. He adopted the name of "Western Linoleum Manufacturing Company," intending to incorporate it thereafter, but which was never done. Appellant, a civil engineer, was to superintend the erection of the plant, for which he was to receive 10 per cent. of the total cost as compensation. He was not to receive any salary, nor any of the profits made in the operation of the plant, when operated. The plant was never erected; Eberson abandoning the enterprise. The appellant rented an office, placing on it a sign, bearing the name suggested by Eberson, "Western Linoleum Manufacturing Company." During the months of May, June, and August, 1910, he purchased some linseed oil, to be paid for in cash upon delivery, all of which, except one carload, was purchased and paid for by Eberson. In September, 1910, Eberson had given up the idea of building a linoleum plant, as he found the pigment which he had invented was not a success. No contracts for the purchase of linseed oil were made thereafter by appellant, except those in controversy. The Western Linoleum Manufacturing Company kept no bank account, its name was not listed in the telephone or city directories, and with the exception of one carload the purchases, as hereinbefore stated, were bought for and sold to Eberson, who borrowed the money to pay for the oil as it arrived. On November 30, 1910, he sent a telegram to appellee, a concern of means, in the oil business in the city of New York, asking for a quotation of prices on 150,000 gallons of linseed oil, equal monthly deliveries to be made from April to August, inclusive, f. o. b. cars New York, or other Atlantic ports; also St. Louis. Upon receipt of this telegram the appellees called up Mr. La Forge, of the American Linoleum Manufacturing Company, of which he was secretary and therefore acquainted with the linoleum trade of the country, for the purpose of inquiring about the standing of the Western Linoleum Manufacturing Company. Mr. La Forge informed them that he under-

Digitized by Google

stood that this was a plant which had been taken over by Cook a short time ago. Cook was the owner of the Trenton Oil Cloth & Linoleum Manufacturing Company, a very wealthy concern engaged in manufacturing linoleum. At the same time they put in an inquiry for a report on the Western Company with Dun's Commercial Agency. An effort was made by the appellees to ascertain from the Trenton Company about appellant's company, but it could not be reached. Thereupon on the same day appellees sent to the Western Linoleum Manufacturing Company the following telegram: "Eighty-four and one-half cents delivered St. Louis less one per cent. seaboard weights to govern, subject to prompt wire reply." On the same day it confirmed this telegram by letter. On the next day the appellees received a telegram from appellant, signed "Western Linoleum Mfg. Co.," accepting their offer. On December 2d appellees wrote to the Western Linoleum Manufacturing Company, acknowledging receipt of the telegram accepting their offer, and wrote as follows: "We haven't had the pleasure of doing any business with you in the past, and as this is comparatively a large order, will you kindly furnish us with references? As to our ability to carry out the contract, we refer you to [naming a number of large and responsible firms dealing in oil]." On the same day appellees received another telegram from the Western Linoleum Manufacturing Company asking for quotations on 125,000 additional gallons of linseed oil to be delivered between April and August in equal quantities monthly. On December 3d, appellees wired, quoting the same price for this last inquiry as for the previous order. The appellant wired back that the price was too high, and to wire if they can do better. On December 5th, appellees wired offering the oil "at 79¢ seaboard." This was accepted by appellant on the same day. On that day the purchasing agent of the Trenton Oil Cloth & Linoleum Manufacturing Company, the Cook concern, called appellees by telephone, asking about the Western Linoleum Manufacturing Company. When appellees informed them that they understood that was a plant which the Trenton Company had taken over, he answered that that was not so, that they only heard lately of such a company, and for the sake of their records were desirous of knowing who the company was.

Appellees, not having received any reply from the plaintiff to their letter asking for references, wired on December 8, 1910, the Western Linoleum Manufacturing Company, to telegraph when it answered that letter. On the same day they received a reply, signed "Western Linoleum Manufacturing Company," saying, "Letter mailed you yesterday." Between December 5th and December 8th appellees again undertook to get reports from the Dun Commercial Agency. On December 9, 1910, appellees received the letter which appellant had wired them as having been mailed by it on December 7th, but no mention was made of any references, nor did it ever send any references. On December 7th, appellees sent another telegram of inquiry to the Dun Commercial Agency, at St. Louis, and on December 8th, received a reply to this telegram, and also a report by mail. The report by mail was as follows: "Dec. 6, 1910. Efforts to locate the Western Linoleum Mfg. Co. have not been successful. Inquiry at 1416 Chemical Building, which is the office of Wm. Fay, who for many years has been consulting engineer, it is learned that he occasionally uses the above style. Various calls were made at his office, but were not successful in interviewing him. Inquiry in various other quarters elicits no information in regard to a business under this name in St. Louis or elsewhere. The name does not appear in the city or telephone directories, and several of those who have known Mr. Fay for years know nothing in regard to his connection with the linoleum business." The report by telegraph was as follows: "Apparently nominal style adopted by William Fay, a civil engineer, who made advantageous purchase of considerable linseed and apparently trying to negotiate arrangements to work it into linoleum. Unable to meet him, no answer to requests for statement. No financial responsibility traced to him, not known to principal linoleum jobbers." Upon receipt of these reports appellees sent appellant the following telegram: "Not hearing from you and in view of reports we get from agencies and St. Louis parties must consider sale made to you canceled." The total amount involved in these two contracts was about $225,000.

Digitized by Google

Appellant instituted suit against the appellees for breach of contract on the law side of the District Court, whereupon the appellees filed their bill on the equity side of the court, praying for the cancellation of the contracts, as having been obtained by fraud and misrepresentation, and to enjoin the prosecution of the action at law. Upon the hearing, the principal witnesses testified orally. The court rendered a decree in favor of appellees, canceling the contracts, and enjoining the appellant from prosecuting any action at law or in equity, based upon these contracts. The court found that "the contract had been obtained fraudulently, and further found that on the day the plaintiffs [appellees] repudiated the contracts, the price of linseed oil had fallen, and was worth less by five or six cents per gallon than when the price was agreed on, and that, instead of being damaged by the repudiation, the defendant [appellant] was benefited, in that he could have bought the oil for a much less price, if in good faith he was seeking to buy oil at all." From this decree this appeal is being prosecuted.

S. T. G. Smith, of St. Louis, Mo. (H. L. Dyer, of St. Louis, Mo., on the brief), for appellant.

Frank H. Sullivan, of St. Louis, Mo. (Jones, Hocker, Sullivan & Angert, of St. Louis, Mo., and Frederick T. Hill, of New York City, on the brief), for appellees.

Before SANBORN and SMITH, Circuit Judges, and TRIEBER, District Judge.

TRIEBER, District Judge (after stating the facts as above). [1, 2] It is insisted on behalf of appellant that the court, as a court of equity, was without jurisdiction, as there was a complete and adequate remedy at law, and therefore his plea to the jurisdiction should have been sustained. As the action was commenced after February 1, 1913, when the new equity rules were in force, the fact that the plaintiff had a complete and adequate remedy at law is no longer ground for demurrer or motion to dismiss. The proper procedure is to move to transfer it to the law side. Equity Rule 22 (198 Fed. xxiv, 115 C. C. A. xxiv). Failing to make such a motion, and proceeding to a hearing, was a waiver.

[3-5] But, aside from this, if there had been a transfer to the law side of the court, and the bill treated as an answer to the action at law, if it stated an equitable defense, it would have had to be disposed of by the court, sitting as a chancellor, before the trial of the action at law to a jury; and if upon such a hearing the equitable defense had been sustained there would be nothing left to try to a jury. This was decided by this court in Union Pacific R. R. v. Syas, 246 Fed. 561, 158 C. C. A. 531. The facts alleged in the complaint make it clearly a case for equitable relief, as it seeks to cancel contracts alleged to have been obtained by fraud and deception, and that the minds of the parties had never met. Sharon v. Hill (C. C.) 20 Fed. 1; Sharon v. Hill (C. C.) 22 Fed. 28. The cancellation of the contracts would prevent their use in any other action instituted by appellant on these contracts.

[6] Was the decree right upon the facts? The findings of the trial judge, especially as most of the testimony was taken in open court, are entitled to high consideration, and unless clearly against the weight

Digitized by Google

of evidence, or induced by a mistaken view of the law, such findings will not be disturbed by the appellate court.

[7, 8] A careful reading of the testimony leads to the conclusion that the representations by appellant that it was a corporation, and by implication at least, with a capital and commercial rating, was such a concealment of facts as amounts to a fraud. In Smith v. Richards, 13 Pet. 26, 36, 10 L. Ed. 42, the rule laid down in Story's Equity Jurisprudence was followed:

"'Where the party, intentionally, or by design, misrepresents a material fact, or produces a false impression, in order to mislead another, or to entrap or cheat him, or to obtain an undue advantage of him, in every such case, there is a positive fraud, in the truest sense of the terms; there is an evil act, with an evil intent; dolum malum, ad circumveniendum. And the misrepresentation may be as well by deeds or acts, as by words; by artifices to mislead, as by positive assertions.'"

The court then proceeded:

"And even if the party innocently misrepresents a fact, by mistake, it is equally conclusive; for it operates as a surprise and imposition on the other party. Or, as Lord Thurlow expresses it, in Nevill v. Wilkinson, 'It misleads the parties contracting, on the subject of the contract.'"

Even if there was no fraudulent intent on the part of the appellant, there can be no doubt that the minds of the parties never met, as, when the appellees made the contract, they were under the impression that appellant was a corporation engaged in the manufacture of linoleum, with a capital and commercial rating. While it is the general rule that a contract may be made by correspondence or by telegraph and when the offer is made by the seller and accepted by vendee it is a valid contract, there are exceptions to this rule. When a party inquires for prices and misrepresents his financial standing, either expressly or by suppressing a material fact which, if known to the vendor, he would not have entered into the contract, in such a case a concealment of the true facts is a fraud on the vendor which entitles him to a rescission, provided he acts promptly. The evidence in this case sustains beyond question the finding of the trial judge that there was a material misrepresentation or concealment of the truth on the part of the appellant when he represented himself as the Western Linoleum Manufacturing Company. Nor can there be the least doubt that the appellees acted under this misapprehension and exercised extraordinary diligence for the purpose of ascertaining the commercial standing of the so-called Western Linoleum Manufacturing Company, and upon discovery of the true facts promptly rescinded the contract.

It must not be overlooked that these contracts of sale were not for immediate delivery, but for deliveries to be made at future times. The contracts were made in November and December, and the deliveries were to be made between April and August, in equal monthly installments. It was therefore of the utmost importance to the appellees that the vendee should be a responsible party, and financially able to accept and pay for the oil when delivered, although the price might have declined considerably in the meantime. As stated in Ar-

Digitized by Google

kansas Smelting Co. v. Belden Co., 127 U. S. 379, 388, 8 Sup. Ct. 1308, 1310 (32 L. Ed. 246), where there was a contract for future deliveries:

"During the time that must elapse between the delivery of the ore, and the ascertainment and payment of the price, the defendant had no security for its payment, except in the character and solvency of Billing and Ellers."

Had appellant made the inquiry for the price of oil in his own name, instead of in the name of a supposed corporation, which had no existence, there can be no doubt that appellees would never have entered into these contracts in the absence of references as to his financial standing. Therefore the minds of the parties have never met. A case directly in point is Fifer v. Clearfield & Cambria Coal & Coke Co., 103 Md. 1, 62 Atl. 1122. Other authorities in point are Cundy & Bevington v. Lindsay, 3 Appeal Cases, 459, 47 L. J. Q. B. 481, 38 L. T. 573, 6 Eng. Rul. Cases, 211, decided by the House of Lords; Boston Ice Co. v. Potter, 123 Mass. 283, 25 Am. Rep. 9; Rodliff v. Dallinger, 141 Mass. 1, 4 N. E. 805, 55 Am. Rep. 439.

[9] Another ground upon which relief is frequently granted by courts of equity is when a hardship amounting to an injustice would be inflicted on a party by holding him to his apparent bargain and it is unreasonable to hold him to it. Paget v. Marshall, 28 Ch. D. 255, 54 L. J. Ch. 575, 51 L. T. 351. The evidence satisfies beyond question that appellant was insolvent, having no means to respond to losses which appellees may sustain if, by reason of a fall in the price of oil, he refused to accept the oil when tendered, and that he entered into these contracts solely for speculative purposes, with neither intention nor ability to carry them out, if the price of oil should decline, when deliveries were to be made, but to take the profits arising from the transaction, if the price of oil appreciated.

[10, 11] Another ground upon which the decree must be sustained is the finding by the trial judge, warranted by the proof, that the price of oil had declined at the time of the cancellation of the contracts, and appellant could sustain no damage by the repudiation of the contract by appellees. It is true this would be a complete defense at law, but, a court of equity having obtained jurisdiction by reason of the equitable allegations, it retains it for all purposes.

The decree of the court below is right, and is affirmed.

SANBORN, Circuit Judge, dissents.

Digitized by Google

(249 Fed. 421)

STOCKYARDS NAT. BANK OF ST. PAUL, MINN., v. FIRST NAT. BANK OF TOWNER, N. D.

(Circuit Court of Appeals, Eighth Circuit. February 23, 1918. Rehearing Denied May 29, 1918.)

No. 4917.

1. PLEDGES ⟹25—LOSS OF TITLE.

A pledgee of promissory notes, residing in a city other than that where the notes are payable, does not, the notes being payable at the bank of the pledgor, lose title by sending them to the pledgor for collection, where the pledgor received them for that purpose only, unless they are assigned in due course, for value, before maturity, and without notice to a bona fide purchaser.

2. BILLS AND NOTES ⟹339—BONA FIDE PURCHASE OF PROPERTY OF PLEDGOR —RIGHTS.

Plaintiff, which had received notes as collateral for a loan made to a bank at a distant city, transmitted the notes, which bore a blank indorsement on the back, to the pledgor bank for collection. The bills receivable register of the pledgor bank showed that all such notes had been erased, while the collection register showed that the notes were held by the pledgor bank for collection for plaintiff. *Held*, that a purchaser of the property of the pledgor bank, not being a bona fide purchaser within the law merchant, was not entitled to the notes as against plaintiff, for due diligence would have disclosed plaintiff's ownership.

3. EVIDENCE ⟹354(2)—BANK REGISTERS.

Where a pledgee of notes delivered them to the pledgor bank for collection, and the bank transferred its assets to defendant, who collected the same, the exclusion of the bills receivable register and the collection register of the pledgor bank, in an action by the pledgee to recover against the purchaser, was error.

4. EVIDENCE ⟹20(2)—JUDICIAL NOTICE.

That every bank keeps bills receivable registers and collection registers is so well known that courts may take judicial notice of the fact.

In Error to the District Court of the United States for the District of North Dakota; Thomas C. Munger, Judge.

Action by the Stockyards National Bank of St. Paul, Minn., against the First National Bank of Towner, N. D. There was a judgment for defendant, and plaintiff brings error. Reversed, with directions to grant new trial.

George A. Bangs, of Grand Forks, N. D. (George R. Robbins, of Grand Forks, N. D., on the brief), for plaintiff in error.

Edward Engerud, of Fargo, N. D. (Tracy R. Bangs, of Grand Forks, N. D., and Engerud, Divet, Holt & Frame, of Fargo, N. D., on the brief), for defendant in error.

Before HOOK and SMITH, Circuit Judges, and TRIEBER, District Judge.

TRIEBER, District Judge. For convenience we shall refer to the plaintiff in error as the plaintiff, and the defendant in error as the defendant, as they appeared in the court below. The facts are practically undisputed. The Farmers' State Bank of Towner, N. D., borrowed from the plaintiff the sum of $8,600, and to secure the same

⟹For other cases see same topic & KEY-NUMBER in all Key-Numbered Digests & Indexes

Digitized by Google

hypothecated and delivered to it as collateral 15 notes of its customers, all of them payable at the Farmers' State Bank, in Towner, N. D. Shortly before these notes became due, the plaintiff, at the request of the Farmers' State Bank, sent these notes to the Farmers' State Bank for collection and remittance, and when collected and remitted to be credited on the principal note. When these notes were sent, the Farmers' State Bank executed its receipt therefor, which reads as follows:

"Received for collection from Stockyards National Bank, South St. Paul, Minn., the following list of notes, held as collateral to note of T. J. Cummings, the proceeds of which are to be remitted to said Stockyards National Bank, and indorsed on indebtedness here."

It then gives a list of the 15 notes received by it from the Stockyards National Bank. Three of these notes, amounting to $912.25, were collected by the Farmers' State Bank and remitted to the Stockyards National Bank and credited on the note. Each of these notes had been indorsed in blank by the Farmers' State Bank, by stamping on the back:

"Pay to the order of ....., without recourse. [Signed] Farmers' State Bank of Towner, by T. J. Cummings, Cashier."

The loan to the Farmers' State Bank was evidenced by a note of the cashier of that bank, but it is conceded by all parties that the loan was made for the sole use of the Farmers' State Bank, was credited to it on the books of the Stockyards National Bank, and drawn out by it in the usual course of business.

On November 9, 1915, the Farmers' State Bank, in pursuance of a proposition in writing made on October 28, 1915, by the defendant bank, sold its loans and bills receivable, fixtures, lease on the building, and good will to it, but retained all other property, which consisted of some real estate and some other assets. In consideration of this sale the First National Bank agreed to assume the payment of the Farmers' State Bank's deposit liabilities, but none other. The agreement also provided that the loans purchased must be satisfactory to the First National Bank, an examination of them to be made by at least two of the directors of the First National Bank, the loans to be listed and scheduled, and the accrued interest to be figured on all notes on which interest was from date, unearned interest was to be discounted where it had been paid in advance, and the notes to be taken at their present worth. The agreement further provided that, if the bills receivable accepted by the First National Bank are insufficient to pay all deposit liabilities assumed and list of them to be furnished, the Farmers' State Bank was to pay the defendant, in cash or acceptable paper, the difference, which was found to amount to $1,952.33, which was paid by the Farmers' State Bank to the First National Bank by draft and cash. The Farmers' State Bank also obligated itself not to enter into the banking business at Towner, where both banks were located, for 10 years, and that its bank would be liquidated and dissolved as a corporation.

The 12 notes amounted to $7,564.60 after the credit of the $912.25, which had been previously collected by the Farmers' State Bank and

Digitized by Google

remitted to the plaintiff. Nine of these collateral notes were past due at the time they were transferred to the defendant; three of them, amounting to the sum of $1,499, were not yet due. The First National Bank collected these notes, and the plaintiff brought this action to recover the balance due it on its note; the First National Bank having collected more than sufficient from these collateral notes to pay it. There was a trial to a jury, and the court granted a peremptory instruction directing a verdict for defendant.

When the examination was made by the directors of the First National Bank, the notes in controversy, and which had been theretofore pledged with the Stockyards National Bank, were claimed by the president of the Farmers' State Bank to be the property of that bank. These were the only notes, so far as appears from the evidence, held by the Farmers' State Bank at that time, which bore the indorsements hereinbefore set out. The bills receivable book of the Farmers' State Bank, which was offered in evidence by the plaintiff and by the court excluded, showed that all these notes in controversy had been erased, thus showing that they were no longer the property of the Farmers' State Bank. The collection register of the Farmers' State Bank, which was also offered in evidence by the plaintiff and by the court excluded, showed that these notes were held by the Farmers' State Bank for collection for the plaintiff bank.

Counsel for defendant, in their oral argument, concede that no claim of bona fide purchaser under the law merchant is made, but it based its claim upon an estoppel of the plaintiff bank, by reason of the fact that it had intrusted the notes to the Farmers' State Bank without any indicia on the notes that they were its property, or that they were sent to the Farmers' State Bank for collection only, and upon the additional ground that, the plaintiff having parted with the possession of the notes to the pledgor, it lost the pledge, so far as purchasers from the pledgor without notice are concerned.

[1-4] In our opinion the court erred in excluding the bills receivable and collection registers of the Farmers' State Bank, when offered in evidence by the plaintiff, and in directing a verdict for the defendant. The pledgee of promissory notes, residing in a city other than where the notes are payable, the notes in controversy being payable at the bank of the pledgor, does not lose title to the pledged notes by sending them to the pledgor for collection, the pledgor receiving them for that purpose only, unless they are assigned for value, before maturity, and without notice to a bona fide purchaser, in due course of business. Clark v. Iselin, 21 Wall. 360, 368, 22 L. Ed. 568; J. M. Radford Gro. Co. v. Powell, 228 Fed. 1, 142 C. C. A. 457. In Commercial National Bank v. Canal Bank, 239 U. S. 520, 36 Sup. Ct. 194, 60 L. Ed. 417, Ann. Cas. 1917E, 25, it was held that one who has no title cannot transfer title, unless the owner has given authority, or is estopped; nor can he, in the absence of such authority or estoppel, transfer title by warehousing the goods and indorsing the receipt, although such receipts are negotiable under the Uniform Warehouse Act of Louisiana. As these notes were undoubtedly the property of the plaintiff, the debt for which they were pledged being then unpaid, and it had given no authority to the Farmers' State

Digitized by Google

Bank to sell them, that bank could not by an unauthorized sale pass title to a purchaser who is not a bona fide purchaser under the law merchant.

Is this plaintiff, by intrusting these pledged notes to the Farmers' State Bank for collection, estopped from claiming the proceeds of the notes collected by the First National Bank, there being no claim that the law merchant applies? In our opinion it is not. To maintain the contention of being an innocent purchaser, it is not only necessary to show that the notes were bought without notice, but also without knowledge of facts sufficient to put it on inquiry whether the notes were in fact owned by the Farmers' State Bank, and that it exercised reasonable diligence to ascertain that fact, when from the facts brought to its attention there was reason to suspect that they were not the property of the vendor. In our opinion the defendant did not exercise the diligence required by law. The fact that each of these notes bore a blank indorsement on the back, which is *only* made when a note is assigned, while none of the other notes had such an indorsement, would naturally arouse in the mind of an experienced banker some suspicion, and it is then his duty to make inquiry to ascertain the cause of this unusual circumstance. What would have been more natural than for the directors of the defendant bank, when they made that examination, and they found these notes thus indorsed to examine the bills receivable register of the Farmers' State Bank, which the evidence shows was kept by it, and therefrom ascertain whether they belonged to the Farmers' State Bank? Had they done so, they would have learned at once that these notes were not the property of the Farmers' State Bank, but that they had been assigned to same other bank or person. After having ascertained from the bills receivable register that these notes no longer appeared thereon, the next step, for one exercising reasonable diligence, would have been to inquire how the notes came to be in the bank's possession —whether for collection, or some other cause.

Had they called for and examined the collection register of the Farmers' State Bank, which the evidence shows was kept by that bank, they would have ascertained that these notes were not the property of the Farmers' State Bank, but that they were held by it for collection for the plaintiff. That every bank keeps such registers is so well known that courts may take judicial notice of it, for from these registers the bank knows when notes held by it mature and are to be presented for payment, and whether its property or held for collection only, and, if the latter, by whom they had been placed there for collection, so as to account for them to the owner.

In our opinion the defendant did not exercise that diligence which the law requires of it, and, had it exercised it, it would have ascertained that these notes were not the property of the Farmers' State Bank, but of the plaintiff. As the defendant is chargeable with knowledge of all the facts which by the exercise of reasonable diligence it could have ascertained, it must be charged with the knowledge that these notes were at the time not the property of the Farmers' State Bank, but of the plaintiff. The court erred in excluding the books hereinbefore mentioned, and in directing a verdict for the defendant.

The cause is reversed, with directions to grant a new trial.

Digitized by Google

(249 Fed. 425)

FEENER et al. v. UNITED STATES.

(Circuit Court of Appeals, First Circuit. March 26, 1918.)

No. 1317.

1. CRIMINAL LAW ⟹419, 420(1)—HEARSAY.

Where a witness stated that he was not in the secrets of the grand jury room, cross-examination as to his knowledge whether certain property generally described in the indictment was produced before the grand jury was properly excluded, for it would be mere inference or hearsay.

2. WITNESSES ⟹269(2)—CROSS-EXAMINATION—SCOPE.

Where a witness for the prosecution gave no testimony on direct examination upon the subject of his knowledge regarding the grand jury proceedings, the exclusion of cross-examination as to his knowledge whether property generally described in the indictment was produced before the grand jury was proper, despite defendant's contention that there was a variance between the description in the indictment and the grand jury's knowledge.

3. WITNESSES ⟹269(2)—CROSS-EXAMINATION—SCOPE.

Where defendants contended there was a variance between the description in the indictment of certain property and the grand jury's knowledge, cross-examination of a witness for the prosecution for the purpose of discovering witnesses who knew what testimony the grand jury had before them is properly excluded, where the matter was in no way raised on the direct examination of the witness.

4. INDICTMENT AND INFORMATION ⟹166—VARIANCE.

Where an indictment described property generally, averring that a more particular description was to the grand jury unknown, the prosecution must show that the grand jurors were in fact ignorant of a more particular description as to a substantial portion of the property, or acquittal must be had because of the variance between the indictment and the grand jury's knowledge.

In Error to the District Court of the United States for the District of Massachusetts; James M. Morton, Judge.

Ida M. Feener and Martha Bense were convicted under Criminal Code, § 37, of conspiring to commit the offense of concealment by a bankrupt of property belonging to his estate from his trustee in bankruptcy denounced by Bankruptcy Act, § 29b, and they bring error. Affirmed.

E. Mark Sullivan, of Boston, Mass., for plaintiffs in error.

Thomas J. Boynton, U. S. Atty., of Boston, Mass. (Daniel A. Shea and Francis G. Goodale, Sp. Asst. U. S. Attys., both of Boston, Mass., on the brief), for the United States.

Before DODGE, BINGHAM, and JOHNSON, Circuit Judges.

DODGE, Circuit Judge. The two plaintiffs in error, Ida M. Feener and her sister, Martha Bense, have been found guilty, in the District Court, under section 37 of the Criminal Code (Act March 4, 1909, c. 321, 35 Stat. 1096 [Comp. St. 1916, § 10201]) of conspiring to commit the offense against the United States denounced by section 29b of the Bankruptcy Act (Act July 1, 1898, c. 541, 30 Stat. 554 [Comp. St. 1916, § 9613]); i. e., that of concealment by a bankrupt of property belonging to his estate from his trustee in bankruptcy.

Digitized by Google

The indictment alleged the filing of a voluntary petition by the defendant Feener on January 20, 1915, her adjudication on the same day, and the qualification of trustees of her estate on February 17 and 18, 1915. The alleged date of the conspiracy charged was January 1, 1915. The offense contemplated was thus described:

"Which said offense was to be committed by said Ida M. Feener by knowingly and fraudulently concealing while a bankrupt from her trustee in bankruptcy thereafter to be chosen, appointed, and qualified in a voluntary proceeding thereafter to be begun by her, * * * certain property belonging to the estate in bankruptcy of said Ida; that is to say, jewelry and diamonds to the amount and value of $2,000, and automobiles, parts of automobiles, and accessories to automobiles, of the value in all of $5,000, a more particular description of said jewelry, diamonds, automobiles, parts of automobiles, and accessories being to the jurors unknown, in that they should agree to fraudulently represent to said trustees that said property was in fact the property of said Martha, whereas, in truth and in fact, as they at all of said times well knew, said property belonged to said Ida."

There was uncontradicted evidence that at the alleged date of the offense there were three Packard automobiles and one detachable *top* formerly owned by the defendant Feener, and later taken over by the defendant Bense by a proceeding which, in form of law at least, was a foreclosure of a chattel mortgage thereon, which she claimed had been assigned to her by the defendant Feener.

There was also uncontradicted evidence that at said date there were four diamond rings and one pair of diamond earrings in the Collateral Loan Company's possession, having been previously hypothecated to it by the defendant Feener and for a long time in her possession.

The indictment was found by a grand jury convened in September, 1916. There was also uncontradicted evidence that it was then known, and had for some time been known, to said trustees in bankruptcy and to persons in the United States Attorney's office, as to the above automobiles and top, that they were in the custody of a receiver appointed by a Massachusetts court in an equity suit (by or against whom does not appear from the bill of exceptions); also that the above diamond rings and pair of diamond earrings were in the Loan Company, having been there deposited by the defendant Feener long before her bankruptcy. The bill of exceptions states that there were no other automobiles, tops, or accessories, or jewelry, "other than those referred to by any evidence in the case, shown to have been of the estate of the defendant Feener at the date of the offense charged."

[1, 2] The bill of exceptions does not purport to set forth all the evidence at the trial, and an assignment of error to the court's refusal to rule that upon said evidence the defendants were entitled to an acquittal has not been urged before us. The same is true regarding seven of the nine other assignments. The plaintiffs in error have been "content to urge their appeal upon their fourth and fifth assignments of error," which relate to alleged variances "between the grand jury's knowledge of or particular description of said jewelry and the indictment's description" thereof, or "between the grand jury's

Digitized by Google

knowledge of said jewelry and automobiles and the description of said articles as contained in said indictment."

One of the trustees in bankruptcy, a witness for the prosecution, testified that he located diamonds or jewelry standing in Ida M. Feener's name in the Collateral Loan Company, consisting of five specific things upon which loans had been negotiated some time in the fall of 1912. On cross-examination he stated that the five specific things referred to were produced in the bankruptcy court. To a question in his cross-examination whether they were produced before the grand jury, objection was made, and, as is agreed, the cross-examining counsel then claimed the right to inquire concerning what the witness knew of the grand jury proceedings, for the purpose of showing that a variance existed, as above. The court excluded "this line of inquiry"—the witness having stated that he "was not in the secrets of the grand jury room," the prosecution having stated, when objecting, that the witness did not appear before the grand jury, and there being nothing to show that he did appear before them. What the witness knew of the proceedings before them could thus have been at most only inference or hearsay. For that reason, and for the further reason that no testimony given by him on direct examination opened the subject of his knowledge regarding the grand jury proceedings, we cannot hold the court's ruling erroneous. The bill of exceptions sufficiently shows that by excluding "this line of inquiry," as above, the court did not exclude all inquiry regarding the proceedings before the grand jury. A previous witness for the prosecution, who had testified in those proceedings, had already stated in cross-examination that he had therein described the five articles of jewelry to the grand jury, the same being then in his possession, though he did not have them with him while so testifying.

[3] In a further cross-examination of the trustee in bankruptcy above referred to, he was asked if he knew "who it was first brought this matter to the attention of the district attorney." Objection being made to the question, the cross-examining counsel was asked to state how it was material. He answered, that he might "be able to discover who it was testified before the grand jury regarding the automobiles," and that if it appeared that the indictment had been obtained relating to property concerning which there had never been any testimony before the grand jury, the court might quash the indictment of its own motion. The court excluded the question, and we think rightly. As in the case of the question above referred to, it was upon a matter not opened in direct examination, and the inquiry, of course, could not be allowed, merely in order to assist the defendants in discovering witnesses who knew what testimony the grand jury had had before them.

[4] What had been said disposes of the fourth and fifth assignments of error, upon which the plaintiffs in error state that they are content to urge their appeal. It may be added that so much of the judge's charge as related to the question of variance is before us in the bill of exceptions, and we find nothing in his instructions which would warrant us in holding them erroneous, even if the assignments of error regarding them, or any of them, had been insisted upon. The

Digitized by Google

jury were told, in substance, that the prosecution must satisfy them, as to some substantial portion of the property referred to, that the grand jurors were in fact ignorant of a more particular description than that given in the indictment, and that, if it had failed so to do, there should be an acquittal by reason of a variance.

The judgment of the District Court is affirmed.

(249 Fed. 428)

WORMSER BROS. et al. v. F. MARROQUIN & CO.

(Circuit Court of Appeals, Fifth Circuit. March 11, 1918.)

No. 3046.

1. SALES ⚷53(1)—ACTIONS—EVIDENCE.
   In an action for the value of corn sold under a contract entered into in Mexico when that country was in a state of great disorder, which required the buyer to assume all risks of loss in transportation, provided communications were open, the question whether communications were open at the time of shipment *held*, under the evidence, for the jury.
2. SALES ⚷201(2)—CONTRACTS—LIABILITY OF BUYERS.
   Where a contract for the sale of corn in Mexico required the buyer to assume all risks of loss during transportation and to pay drafts with bill of lading attached on presentation, the seller cannot recover for corn loaded in cars, which was destroyed by fire prior to shipment.
3. PAYMENT ⚷12(5)—CONTRACTS—ACTION—EXTENT OF RECOVERY.
   Where, pursuant to a contract made in Mexico for the sale of corn, the buyer deposited $500 to the credit of the seller, the deposit must, as the price of the corn was fixed in Mexican currency, be deemed to have been made in that medium; so, on a suit in the United States involving the contract, the seller could not be charged $500 in United States money, a Mexican dollar at the time of the deposit having been worth only 44 cents in the currency of the United States.

In Error to the District Court of the United States for the Southern District of Texas; Waller T. Burns, Judge.

Action by F. Marroquin & Co. against Wormser Bros. and the Laredo National Bank, in which Wormser Bros. filed a cross-action. There was a judgment for plaintiffs, defendants Wormser Bros. also recovering on their cross-action, and defendants bring error. Reversed and remanded.

A. Winslow and Paul W. Evans, both of Laredo, Tex., for plaintiffs in error.

Hal W. Greer and A. C. Hamilton, both of Laredo, Tex., for defendants in error.

Before WALKER and BATTS, Circuit Judges, and FOSTER, District Judge.

BATTS, Circuit Judge. Marroquin & Co. instituted suit against Wormser Bros. for the value of five carloads of corn, alleged to be worth $3,228.92. The contract is evidenced by telegrams which passed between the plaintiffs and defendants. A number of letters, copies of which were introduced by plaintiffs, were not, according to the evi-

---

⚷For other cases see same topic & KEY-NUMBER in all Key-Numbered Digests & Indexes

Digitized by Google

dence introduced by the defendants, received by them. It is not necessary to determine whether the objections to the introduction of these letters were well founded, as the case may be disposed of without giving them consideration.

The transaction was initiated by two telegrams on October 6, 1913, from Julio Wormser to F. Marroquin & Co., the telegrams being sent from Nuevo Laredo, Tamaulipas, to Monterey, Nuevo Leon. The first of these telegrams the defendants deny sending, and is to this effect:

"Wire to Wormser Brothers, Laredo, Tam., best price of corn by carload lots for immediate shipment."

The second was as follows:

"Wire to Wormser Brothers, Laredo, Tam., best price of white corn in bulk to be shipped when communication is opened."

On October 7th, Marroquin wired in reply:

"We oblige you five carloads at the price understood depositing five hundred dollars and authorizing us to send draft attached to bills of lading. We sell on no other conditions."

On the same day Wormser Bros. wired Marroquin:

"We accept five carloads at your conditions. Please notify us when you have more. Letter follows."

Also on that day Wormser Bros. wired:

"We will take five cars, shipping when communication is open. You confirming. We will give instructions as to shipping."

On October 8th Wormser Bros. wired Marroquin:

"We accept five carloads at your conditions this morning. Laredo National Bank will wire deposit of five hundred dollars to your credit."

On the same day Marroquin wired Wormser Bros.:

"We received your order for five carloads and we have accepted it. We are waiting to hear from the bank, and draft must be paid at presentation before we make first shipment."

Wormser Bros. on the same day wired Marroquin:

"We wrote to-day giving instructions as to shipment. Payment consigned to Laredo National Bank."

On October 9th Laredo National Bank wired Marroquin:

"We will pay at presentation of bills of lading insurance policies and drafts the value of five carloads of corn that you will ship to Wormser Brothers."

On October 10th, Marroquin wired Wormser Bros.:

"First carload shipped second and third loaded. Wire consignment. Express your wish to take advantage of opportunity of three carloads same conditions wire immediately."

No letters relative to the contract and no other telegrams with reference thereto were received until after delivery of three carloads of the corn to the railroad. A member of the firm of Marroquin & Co.

Digitized by Google

testified that he took bills of lading on the three cars shipped in the name of F. Marroquin & Co., and consigned them to the same, so as to afterwards indorse them to Wormser Bros. That there were trains from the 6th to the 18th of October, 1913, and that this shipment was made between the 9th and 18th. He testified that he took out three insurance policies, one on each car of the corn shipped, which policies he put in their safe and sent later to the Mercantile Bank, Monterey, for transmission to the Laredo National Bank. The bills of lading, with drafts attached, were also sent to the Laredo National Bank through the Mercantile Bank, Monterey. The bills of lading and insurance policies, according to the evidence introduced by defendants, were not received in Laredo until three or four weeks later. Subsequent to the shipment of the first three cars, Marroquin & Co. secured additional cars for shipment, but before bills of lading were issued the corn was destroyed by fire.

[1] The trial court directed a verdict for plaintiffs for $2,161.81, and for defendants on their cross-action in the sum of $500. The $2,161.81 is the value of the corn at the price agreed upon in American money, and the $500 is the amount placed to the credit of Marroquin & Co. by the Laredo National Bank. At the time of the transactions detailed there were great disorders in Mexico, and all the parties understood the dangers incident to transportation. It is apparent, from the telegrams sent by Marroquin & Co., that they had no intention of taking any chance as to receiving the purchase price of the corn. They indicated the conditions under which they were willing to sell, and stated that they would sell on no other conditions, and made no consignment of any part of the corn until they had received assurances from the Laredo Bank that $500 of the money had already been paid, and that the drafts for the balance of the purchase price would be paid on presentation. On the other hand, it is quite as apparent that a condition of the sale imposed by defendants was that it was to depend upon communication being open. The testimony of the witness Marroquin indicates that trains were running at the time the bills of lading were issued. Evidence introduced by defendants was to the contrary. Apparently an issue was presented which should have been submitted to the jury.

[2] As to the two cars which were destroyed prior to shipment there does not appear to be any theory upon which Marroquin & Co. are entitled to payment for their value from Wormser Bros.

[3] When Marroquin & Co. drew their drafts on Wormser Bros. the amounts were calculated in Mexican money. The price given by wire was in the same medium. A receipt from the Mercantile Bank of Monterey to the Laredo National Bank is to the effect:

> "We have debited your account as follows: Our payment to F. Marroquin & Co., according to your instructions as per duplicate voucher we are inclosing herewith, five hundred dollars."

This receipt, executed in Mexico, taken in connection with the circumstance that the price of the corn was given in Mexican money, and that the drafts were so drawn, would seem to clearly indicate that the $500 paid was paid in Mexican money. According to the testi-

Digitized by Google

mony, this was worth at the time 44 cents. Apparently it would be erroneous to charge defendants in error with more than the $220 received.

The judgment is reversed, and the cause remanded for trial in accordance herewith.

Reversed and remanded.

(249 Fed. 431)

CLARK et al. v. FAIRBANKS.

(Circuit Court of Appeals, Fifth Circuit. March 12, 1918.)

No. 3079.

1. APPEAL AND ERROR ⟹781(6)—DISMISSAL—MOOT CASE—SETTLEMENT.
   Where, pending an appeal from an order enjoining the sale of land under a statutory foreclosure proceeding in the state court, a purchaser from the mortgagor and his grantee contracted for an extension with the mortgagees, who recognized such purchaser as obligor in the entire transaction, the appeal will be dismissed; all questions other than costs having become moot.

2. COSTS ⟹232—DISMISSAL—MOOT CASE.
   Where by reason of a settlement the questions involved in an appeal from an injunction order have become moot, costs must be assessed against the appellant in sustaining a motion to dismiss.

3. INJUNCTION ⟹235—DISMISSAL—MOOT CASE.
   Where, pending appeal from an order enjoining mortgage foreclosure sale under statutory proceedings in state court, a settlement of the question involved was effected, appellants cannot, the appeal being dismissed, assert any rights for damages or costs on the injunction bond.

4. COSTS ⟹197—DISMISSAL—MOOT CASE.
   Where, pending appeal from an order enjoining a sale under statutory foreclosure proceedings in a state court, a settlement was effected, the question of costs in the state court will be left for that tribunal on dismissal of the appeal.

Appeal from the District Court of the United States for the Western District of Louisiana; Rufus E. Foster, Judge.

Bill by W. D. Fairbanks against Ollie O. Clark and others. From an order enjoining sale of land under foreclosure proceedings in the state court, defendants appeal. Dismissed.

John C. Theus, of Monroe, La., for appellants.

W. F. Millsaps and R. H. Oliver, Jr., both of Monroe, La., for appellee.

Before WALKER and BATTS, Circuit Judges, and NEWMAN, District Judge.

NEWMAN, District Judge. This is an appeal from an order granting an injunction against the sale of certain real estate under a foreclosure of a mortgage under a statutory proceeding in the state court. It is unnecessary to discuss the merits of the matter in controversy in this case, because there is a motion by the appellee to dismiss the case in this court, as the case as it existed at the time it was heard in the Dis-

---

⟹For other cases see same topic & KEY-NUMBER in all Key-Numbered Digests & Indexes

Digitized by Google

trict Court, and when the appeal was entered, has been settled by a subsequent agreement between the parties.

The mortgage which was foreclosed, and under which the sale was about to be made, was a mortgage given by L. M. Fairbanks to Ollie O. Clark, Carey C. Clark, and William E. Clark on the land covered by the mortgage in question here, which was, as recited in the record, a vendor's lien and special mortgage on the property sold by the Clarks to L. M. Fairbanks. After the purchase of the property by L. M. Fairbanks from the Clarks, he sold the property so purchased to W. D. Fairbanks, who filed the bill in the United States District Court to restrain the sale under the foreclosure of the mortgage. The order granting the injunction was made on March 28, 1917. The appeal to this court was allowed April 3, 1917, and the appeal filed in this court May 8, 1917.

[1] The motion to dismiss the appeal in this case is as follows, signed by counsel and sworn to by W. F. Millsaps, one of the counsel for the appellees:

"The appellee respectfully moves the court to dismiss the appeal herein for the following reasons:

"Subsequent to the order of appeal herein, that is, on the 29th day of June, A. D. 1917, L. M. Fairbanks and W. D. Fairbanks sold and delivered to H. D. Briggs, a resident of Ouachita parish, Louisiana, the property described in the petition for writ of injunction sued out in this cause, for a consideration of $10,000 and the assumption by said Briggs of all indebtedness due by L. M. Fairbanks and secured by mortgage on said property, as is shown by deed on file in the office of the clerk of court and ex officio recorder of mortgages for the parish of Ouachita, state of Louisiana, certified copy of such deed being annexed hereto, the assumption being of all indebtedness affecting the property involved in this litigation and on which the writ of seizure and sale issued out of the Sixth district court of the parish of Ouachita, state of Louisiana.

"On July 24, 1917, appellants substituted said Briggs as debtor instead and in place of appellee and L. M. Fairbanks, the vendor of appellee, received from said Briggs a check for the sum of $20,000 as a partial payment of the mortgage indebtedness, the basis of the foreclosure suit by appellants which was enjoined, and agreed that upon the payment by the drawee bank of the check so given and the further payment of $10,000 on or before August 15, 1917, and $10,000 on or before September 17, 1917, an extension would be granted on the balance of the indebtedness until the 15th day of March, 1918.

"The check for $20,000 was paid upon presentation by the drawee bank and that sum received by appellants; the two other partial payments of $10,000 each were made by the said Briggs and his assignee, Southern Carbon Company (now owner of the land), before their respective due dates, in accordance with the agreement of July 24, 1917, and these amounts accepted by the appellants; and thus there was extended the date of maturity of the debt formerly due by L. M. Fairbanks and affecting the property, sale of which was enjoined.

"Appearer shows that because of the facts above shown, the sale of the land by appellee, the novation of the debt by the substitution of a new debtor, the receipt of the payments made by Briggs and his assignee, and by the extension of time of maturity of the debt to a future date, there has been a valid settlement of all rights and differences respecting the subject-matter of the controversy involved in this cause, events have occurred which make a determination of the right to an injunction unnecessary or for your honorable court to grant any effectual relief, the appellants, on account of the transactions had with Briggs and others, are not entitled further to prosecute the cause entitled 'O. O. Clark et al. v. L. M. Fairbanks,' No. 9231 on the docket of the Sixth district court for the parish of Ouachita, state of Louisiana,

Digitized by Google

and in which a writ of seizure and sale was issued, which said writ is suspended by the proceedings in this cause, but are expressly relegated by the terms of the said contract to suit on the same in the event of default, and there exists at this time no actual controversy, so that to determine the question presented to this court would be to determine a moot question.

"Appellee attaches hereto certified copy of the deed of sale from W. D. and L. M. Fairbanks to H. D. Briggs, certified copy of receipt and agreement by appellants of date July 24, 1917, given by H. D. Briggs, and affidavit by H. D. Briggs, and affidavit by H. D. Briggs of the truth of the facts alleged in this petition.

"Wherefore appellee asks that this honorable court dismiss the appeal filed herein by defendants, at their costs."

The facts stated in this motion are not contested, although it is claimed by counsel for the appellants that certain costs have accrued and certain additional rights may exist in favor of the appellants, which justifies a refusal to dismiss the appeal here. It appears from the above that both L. M. Fairbanks, the original mortgagor, and W. D. Fairbanks, his vendee, have made a deed to the land in question here to Briggs, and that Briggs assumed the payment of the debt to the Clarks, it not to exceed in any event $95,000. Briggs has paid $40,000 of that amount, and agreed to pay the balance in March, 1918; the time for payment being extended to that date by the Clarks.

It appears, therefore, that there is no longer any controversy between W. D. Fairbanks and L. M. Fairbanks, the original mortgagor, on the one hand, and the Clarks, on the other. The issue made between them in this case before the court is clearly at an end, as between them, by the terms of the settlement. The only thing left in the case which might make an issue between them is the question of costs here and in the state court. No provision seems to have been made as to this between the parties in making the settlement by which Briggs assumed the payment of the debt due the Clarks. It seems from the agreement that Stubbs, Theus & Grisham, attorneys for the Clarks, are to retain control of the notes of Fairbanks, and also some other notes which Briggs will pay off, and some tax receipts, until final settlement is made, or until default and suit instituted on the same, when they are to be made matters of court record, and in the event of any default Briggs is to be credited with the entire amount paid.

[2, 3] So it seems that the Clarks have fully and finally accepted Briggs as their obligor in this entire transaction, and the two Fairbanks are relieved from all their liabilities in the matter. All that is left between the parties to this cause and to this appeal being the costs, as stated, it seems to us that the case here must be dismissed. What is left is only a moot question, and there is really no controversy between the parties to the cause as to the subject-matter of the litigation. The costs in this court and in the District Court must be taxed against the appellant in sustaining this motion to dismiss. No rights will exist in favor of the Clarks for any damages or costs on the Fairbanks injunction bond given in the District Court, as they have settled the case with the Fairbanks before its final determination in this court. This settlement would seem to preclude them from making any claim for damages on the Fairbanks bond, but this matter will be determined in the District Court.

Digitized by Google

[4] The costs in the state court, mentioned by counsel for the appellant, can well be left to the state court to be there taxed as the law and justice may require.

The motion to dismiss the appeal must be granted; and it is so ordered.

(249 Fed. 434)

HOUGHTON WOOL CO. v. MORRIS et al.

In re RINGROSE & DRAPER.

(Circuit Court of Appeals, First Circuit. March 6, 1918.)

No. 1314.

1. BANKRUPTCY ⟹81(1)—INVOLUNTARY PROCEEDINGS—SUFFICIENCY OF PETITION.

   An involuntary petition in bankruptcy against a partnership *held* sufficient, where it was answered without objection thereto, although it did not distinctly allege that the partners individually were insolvent.

2. BANKRUPTCY ⟹91(2)—PARTNERSHIP—FINDING OF INSOLVENCY.

   Finding of a referee, confirmed by the court, that an alleged bankrupt partnership, at the time of making transfers of property, was insolvent, *held* supported by the evidence, although there was no specific finding or evidence as to the financial condition of the partners individually, as distinct from the firm.

Appeal from the District Court of the United States for the District of Massachusetts; Jas. M. Morton, Jr., Judge.

In the matter of Ringrose & Draper, bankrupts; Lawrence G. Morris and others, petitioners. The Houghton Wool Company, objecting creditor, appeals from an order of adjudication. Affirmed.

George V. Phipps, of Boston, Mass. (Robert A. B. Cook and Phipps, Durgin & Cook, all of Boston, Mass., on the brief), for appellant.

Lee M. Friedman, of Boston, Mass. (Swift, Friedman & Atherton, of Boston, Mass., on the brief), for appellees.

Before DODGE, BINGHAM, and JOHNSON, Circuit Judges.

DODGE, Circuit Judge. This is an appeal from an adjudication in bankruptcy in involuntary proceedings against a firm composed of two persons as partners; transfers intended as preferences being relied on as acts of bankruptcy. The appellant, Houghton Wool Company, is one of the creditors alleged to have received such preference. It opposed adjudication, denying that the alleged bankrupts had committed the acts of bankruptcy charged or were insolvent.

[1] The involuntary petition alleged that Ringrose and Draper, doing business under the firm name of Ringrose & Draper, were insolvent, etc. It did not distinctly allege that the firm was insolvent, and that each partner was also insolvent, as in strictness it should have done, according to In re Forbes (D. C.) 128 Fed. 137, 139. It alleged only that "said Ringrose & Draper are insolvent" and committed acts of bankruptcy, in that "they did * * * transfer," etc., certain property; whether theirs or the firm's not being spec-

---

⟹For other cases see same topic & KEY-NUMBER in all Key-Numbered Digests & Indexes

Digitized by Google

ified. If these allegations can be taken as meaning that the firm only was insolvent, they are at least as well adapted to convey the meaning that the partners named were insolvent. No objection, however, appears to have been at any time raised to the form of the petition.

In answers filed by each partner, each denied "that he individually or said firm is insolvent." But in the denial of bankruptcy filed by the present appellant it denied only "that the said alleged bankrupts * * * are insolvent," and after its appeal from the adjudication it applied for a decree "severing it in every way from the respondents and from the other objecting creditor, who have not joined in this appeal." The court allowed the application, and entered an order permitting it "singly to claim and prosecute the appeal."

[2] There was a reference to ascertain and report the facts, and a report, wherein the referee found that the alleged transfers had been made, and made with intent to prefer the creditors who received them.

He found also:

"If, as a matter of law and upon the foregoing evidence I may so find, that at the time of said transfers the respondent firm was insolvent."

The report did not set forth the evidence heard by the referee in full, but it did set forth the substance of "the foregoing evidence" referred to. The question is whether or not the finding that the firm was insolvent was warranted.

It is not contended that the evidence did not show insolvency of the firm, if such insolvency can be shown without specific proof that neither partner possessed sufficient resources, over and above his individual debts, to meet the partnership deficit or had assets enough to pay the firm's obligations. No specific proof appears in the evidence set forth in the report, expressly relating to the financial condition of each partner, as distinct from the firm.

The report contained, previously to the above conclusion, findings by the referee that when said transfers were made, and when the petition was filed, the unsecured indebtedness of the respondents was about $41,000, and that they had no assets, other than security held by a trust company for less than the amount of its claim, except possibly a claim incapable of realization except at the end of protracted litigation, and found by the referee to have had no fair valuation for the purpose of the issues before him. That there was sufficient evidence to support these findings is not disputed. Taken as they stand, they are capable of being regarded as findings that neither the respondents individually, nor the respondents as a firm, had assets equalling their liabilities, whether firm or individual; and the District Court so regarded them, as appears from its opinion.

The report shows that statements by Ringrose were in evidence, made in connection with the transfers to the respondent creditors. To one of them, who was urging payment of an overdue bill of $3,400, he said, after giving a check on account, that "that was all the firm could then pay"; that "the firm could not then pay him all they owed him"; that the bank had already called "the firm's loans,"

Digitized by Google

amounting to about $45,000; and that "the firm was not in shape to pay it." At a later interview he told the same creditor "he could not pay" the balance; that "they" had no wool; and, being asked whether "they" had any receivables, he gave an order on another firm for a balance due the respondents. The next day he gave the same creditor checks from two other customers, apparently making up the amount due, stating that "he was in a hole; that the other creditors might object to giving him the receivables and might holler about it; and he said do it, and he would take his chances." The referee found that at the time other creditors were pressing "the respondents."

To another of said creditors, who was urging payment of an overdue account of more than $16,000, Ringrose stated that "he could not make payment"; that "the bank had called the loans and—he could not pay it"; that "he had not any money"; that "they had" wool, and it was free and clear. To this creditor he then gave orders for about $12,000 worth of warehoused wool, further stating that the trust company had "called his loan," and (after showing the wool) that this was all, and the rest of the wool was pledged; that "he had no accounts receivable"; that the bank was holding "any cash the firm had" on account of having called "his" loan. The referee found that at this time "the firm" had no other unpledged wool and no receivables.

No statements by Draper appear in the evidence reported, nor, as has been said, anything expressly and distinctly relating to his financial condition independently of the firm. But in the absence of any evidence to the contrary, and especially as against this creditor, who had raised no distinct issue as to the separate assets or liabilities of either partner, we do not consider ourselves bound to hold the referee's conclusion unwarranted by any evidence before him. The inference might properly have been drawn, from the undisputed facts and Ringrose's statements, that neither partner was solvent to the extent necessary for the purpose of changing the financial condition of the firm, otherwise such as described by Ringrose in the above statements, to a condition of solvency. It is not contended that Ringrose's intention to prefer the creditors to whom he transferred all the firm's receivables and unpledged wool did not sufficiently appear from his statements made to them at the time. The alleged bankrupts have not appealed themselves from the adjudication, and have not been made parties to this appeal. The present appellant fails to satisfy us that the District Court erred in confirming the report and ordering adjudication.

The decree of the District Court is affirmed, and the appellees recover their costs of appeal.

Digitized by Google

(249 Fed. 453)

CARROLL et al. v. CITY OF NEW YORK.

CITY OF NEW YORK v. CARROLL et al.

(Circuit Court of Appeals, Second Circuit. January 16, 1918.)

Nos. 133, 134.

1. COLLISION ⚷123—LIABILITY—BURDEN OF PROOF.

A vessel, proceeding in violation of statutory requirements at the time of a collision, to escape liability, must show such violation did not contribute to the collision.

2. COLLISION ⚷93—LIABILITY—FERRY.

While a ferryboat's occupation imposes additional duties upon vessels pursuing their lawful occasions near ferry slips, yet liability must be determined by the ordinary rules of navigation, where a collision between a ferryboat and another craft occurred 800 feet beyond the end of the ferry slip.

3. COLLISION ⚷102—LIGHTS—LOOKOUTS—LIABILITY.

A ferryboat and propeller, which collided, the former being struck on the starboard side, *held* both liable; the ferryboat for not promptly observing the propeller's lights, it having the right of way under the starboard hand rule, and the propeller in violating statutory requirements as to speed and keeping to the middle of the channel. So the damages should be divided.

Appeals from the District Court of the United States for the Southern District of New York.

Libel by Howard Carroll and another, executors of the estate of John H. Starin, deceased owner of the steamboat Haven, against the City of New York, together with a libel by such respondent against such libelants. From decrees for the City of New York, Howard Carroll and another appeal. Reversed and remanded, with directions.

A few only of the facts regarding this collision need statement as a basis for legal ruling:

On a dark clear night, in the East River, with the tide strong flood, and a northwesterly gale, the ferryboat Queens, bound from her slip near the foot of Whitehall street to Staten Island, came in collision with the propeller Haven, bound from a North River pier into the Sound and so on to New Haven. The blow (nearly amidship) was by the bow of the Haven on the starboard side of the Queens, and not over three points (probably less) off a right angle; contact occurred about 800 feet off the end of the ferry racks, in a line between one of the Whitehall slips and the nearest wharf on Governor's Island, a distance of between 2,200 and 2,300 feet. Before collision the Queens had probably been carried by tide and wind broadside, or nearly so, somewhat to her own port hand.

On getting under way and blowing her slip whistle, the Queens noticed three tows, all on her port bow, all going out of the East River, and all on the Manhattan side of the channel. The estimated distance of the outside tow from the rack or pier ends was 600 feet. While such estimates are not at all reliable, it is found and admitted that all these tows were inside of or nearer Manhattan than the course of the Haven, which as found by the court below was to keep substantially the same distance; i. e., about 800 feet off the Battery, as she rounded into the East River.

The Queens blew one whistle, at least twice, to the tows on her port bow, and received assenting answers. She denies (and we so assume) that she ever blew any passing signal to the Haven, which vessel, however, gave one whistle, on the assumption that one of the Queens' signal blasts was intended for her.

Digitized by Google

The Haven had seen the Queens in, or just leaving, her slip, and when the propeller was passing the Aquarium, a distance of about 2,000 feet; the Queens did not notice the Haven until she was distant no more (by the ferryboat's testimony) than 1,000 feet. Again accuracy is not to be expected in this matter of distance; but we find as a fact, on the Queens' own evidence, that she paid no attention to the Haven, if indeed she saw her, until after the Queens had cleared the tows to her own port, and she was then almost across the Haven's path, although the red light of that vessel must have been plainly visible from the time she was about off the Aquarium. On this point no finding was made below.

The Haven was found at fault for violating the East River statute, both as to speed and proximity to the shore, and no contributing error was discovered in the Queens. Decrees accordingly having been entered, the owners of the Haven appealed.

Macklin, Brown & Purdy, of New York City (Pierre M. Brown, of New York City, of counsel), for the Haven.

Kirlin, Woolsey & Hickox, of New York City (William H. McGrann and Robert S. Erskine, both of New York City, of counsel), for the Queens.

Before WARD, ROGERS, and HOUGH, Circuit Judges.

HOUGH, Circuit Judge (after stating the facts as above). [1] The findings below, to the effect that the Haven was exceeding the speed limit and not keeping in the middle of the channel, are supported by evidence, and we acquiesce in them. There was a violation of statutory requirements, and the burden of showing that such violation did not contribute to collision has not been borne; therefore the Haven must be held to liability.

[2, 3] The conduct of the Queens is sought to be justified under The Breakwater, 155 U. S. 252, 15 Sup. Ct. 99, 39 L. Ed. 139. That case does not mean nor say that a ferryboat's occupation completely frees her from the rules of navigation. It does impose additional duties upon all vessels pursuing their lawful occasions near ferry slips. What shall be the space or region, or the extent thereof, within which these duties are obligatory, is a matter of degree, depending on local and sometimes temporary conditions.

We held in The Paunpeck, 86 Fed. 924, 30 C. C. A. 494, that a ferryboat, colliding with another vessel 800 feet from her slip end, was to be acquitted or condemned by the usual navigating rules. That decision is applicable here; in both cases the conditions are those reasonably to be expected in the transaction of maritime business in the crowded waters of New York Harbor. Therefore the starboard hand rule applied, and the Haven had the right of way. That vessels might be approaching on her starboard bow, to which she must give way, was just as much to be expected by the Queens, as that others would appear to her port.

No reason at all is shown by the ferryboat why she did not see and navigate with reference to the Haven before she did. There is a suggestion—it is far from proof—that the propeller's light was not good; but there is no denial that navigation with reference to the Haven began when just clear of, or just clearing, the outermost tow. That was too late; collision was imminent. It is urged in excuse

Digitized by Google

that the gale and tide rendered it impossible for the Queens, a large boat of great freeboard, to turn in time to pass under the Haven's stern or pass her port to port. That may be true, but its truth would have been just as apparent, had the ferryboat seen the propeller and signaled her earlier. As it happened, nothing was done but to blow the danger whistles, when the Queens was practically across the bows of the privileged vessel. Probably, when those whistles were blown, nothing could be done; but no man is excused from the result of an unlawful situation, if he is not also excusable for getting into it. This last is the excuse lacked by the Queens; if she had seen and noted the Haven at the proper time, i. e., substantially when the Haven saw her, we do not think collision would have ensued; at all events the Queens has not shown the contrary, and thereby avoided the result of a fault on her part, as obvious as that of the Haven.

Holding, therefore, the Haven at fault, as found below, and the Queens also negligent, in that (1) she did not timely observe a situation to which (2) the starboard hand rule applied, the decrees below are reversed, with one bill of costs to appellants, and the causes remanded, with directions to enter decrees dividing the damages and lower court costs.

(249 Fed. 455)

In re SOLTMANN.

Appeal of RATHBONE.

(Circuit Court of Appeals, Second Circuit. January 16, 1918.)

No. 127.

1. BANKRUPTCY ⟹334—CLAIMS—PROOF—SECURED CLAIM—DEFICIENCY.
   Where a trustee in bankruptcy was not a party to proceedings of a creditor to foreclose his fourth mortgage under which sale was had resulting in a deficiency judgment, the deficiency judgment did not constitute a liquidation of the claim under the mortgage, within Bankruptcy Act July 1, 1898, c. 541, § 57h, 30 Stat. 560 (Comp. St. 1916, § 9641), so as to be provable.
2. MORTGAGES ⟹427(1)—FORECLOSURE—EQUITY OF REDEMPTION.
   The mortgagor, or, if he has conveyed before suit brought, his grantee, is a necessary party to an action to foreclose, and, if not made a party, his equity of redemption is not foreclosed.
3. BANKRUPTCY ⟹213—TRUSTEE—RIGHTS OF.
   Under Bankruptcy Act, § 70 (Comp. St. 1916, § 9654), a trustee, when elected, is by operation of law vested with the bankrupt's title as of the date of adjudication, and where the trustee was not made a party to a suit to foreclose a mortgage on the bankrupt's property, begun after bankruptcy, though before election of the trustee, the equity of redemption, which passed to him, was not foreclosed by the judgment.
4. MORTGAGES ⟹567(1)—FORECLOSURE—PURCHASER.
   Where the mortgagor was not a party to a suit to foreclose, nor was his trustee in bankruptcy made a party, a purchaser at such foreclosure sale becomes an assignee of the mortgage, and if he enters into possession becomes a mortgagee in possession, so that if, upon sale thereafter of the premises under a prior mortgage, a surplus be paid into court, the purchaser will be entitled to it, and if a surplus still remains it will go to the trustee as owner of the equity of redemption.

⟹For other cases see same topic & KEY-NUMBER in all Key-Numbered Digests & Indexes

Digitized by Google

5. BANKRUPTCY ⟹334—CLAIMS—LIQUIDATION.

Where the trustee in bankruptcy was not a party to a suit to foreclose fourth mortgage, and the mortgagee recovered a deficiency judgment, which he attempted to prove against the bankrupt's estate, the sole question for determination, the claim not having been liquidated, was whether the amount bid at the foreclosure sale represented the fair value of the premises, and, the referee having found that the value of the land was ample to secure the whole of the mortgagee's claim, he was not obliged to fix its exact value.

6. BANKRUPTCY ⟹334—CLAIMS—LIQUIDATION.

Where a trustee in bankruptcy was not a party to a suit to foreclose a fourth mortgage, so that the deficiency judgment recovered by the mortgagee was not a liquidation of his claim, the judgment roll was admissible as some evidence of the value of the property.

7. APPEAL AND ERROR ⟹544(3)—REVIEW—DETERMINATION.

Appeals are decided on the record sent up whenever possible, and a decree will not be reversed where, from the record, the appellate court could determine the nature of evidence improperly excluded, and that it would not have affected the result.

Appeal from the District Court of the United States for the District of New York.

In the matter of the bankruptcy of Edward G. Soltmann. From an order expunging his proof of debt, R. Bleecker Rathbone appeals. Affirmed.

See, also, 238 Fed. 241.

Eugene L. Bushe, of New York City, for appellant.

Walter B. Raymond, of New York City (Edwin S. Hall, of New York City, of counsel), for trustee.

Before WARD, ROGERS, and HOUGH, Circuit Judges.

WARD, Circuit Judge. This is an appeal from an order expunging R. Bleecker Rathbone's proof of debt against the estate of Edward G. Soltmann, a bankrupt. Rathbone was the owner of a fourth mortgage for $15,000 on premises belonging to the bankrupt, subject to prior mortgages aggregating about $147,000.

After the adjudication Rathbone began an action in the state court to foreclose the mortgage, which was then overdue, filed the usual lis pendens, and obtained permission from the District Court to maintain the action and to make the receiver in bankruptcy a party defendant. Some two months or more after the trustee was elected the usual decree for foreclosure sale was made, and on November 20, 1915, the sale was had, resulting in a deficiency judgment for $16,334.50 against Soltmann, which was duly entered of record on the docket of judgments in the office of the clerk of the county of New York December 31, 1915.

[1] January 5, 1916, Rathbone filed a proof of debt in bankruptcy, relying upon this deficiency judgment as a liquidation by him of his claim under section 57h of the Bankruptcy Act. Judge Mayer rightly disallowed the claim, on the ground that the trustee not having been made a party the deficiency judgment did not constitute a liquidation of the claim by Rathbone under the mortgage.

Digitized by Google

[2-4] Thereupon Rathbone filed an amended proof of debt, asking that the value of the mortgage be liquidated as the court might direct under the same section. The referee in bankruptcy took much testimony of experts as to the value of the mortgaged premises, upon which he found that they were ample security for Rathbone's claim. Judge Manton confirmed the report and ordered the claim to be expunged.

The mortgagor, or, if he has conveyed before suit brought, his grantee, is a necessary party to an action to foreclose, and, if not made a party, his equity of redemption is not foreclosed. The trustee in this case was elected after suit brought, but became vested by operation of law with the mortgagor's title as of the date of adjudication, which was before suit brought, section 70, Bankruptcy Act. Consequently his equity of redemption has never been barred. Winslow v. Clark, 47 N. Y. 261; Landon v. Townshend, 112 N. Y. 93, 19 N. E. 424, 8 Am. St. Rep. 712. The purchaser at such a foreclosure sale becomes assignee of the mortgage, and if he has entered into possession he becomes mortgagee in possession. This is because the land is not sold and the mortgage is sold. Townshend v. Thomson, 139 N. Y. 152, 161, 34 N. E. 891; Jackson v. Bowen, 7 Cow. (N. Y.) 13; Robinson v. Ryan, 25 N. Y. 320; Miner v. Beekman, 50 N. Y. 337.

It results from the foregoing that Rathbone has lost his mortgage, and that the purchaser at the foreclosure sale is the owner of it. If, upon a sale hereafter of the premises under a prior mortgage, a surplus be paid into court, the purchaser at the foreclosure sale under Rathbone's mortgage will be entitled to it. If there remain after that a surplus, it will go to the trustee, as owner of the equity of redemption.

[5] Accordingly the question to be determined was whether the amount bid at the foreclosure sale represented the fair value of the premises. The referee found that the value of the land was ample to secure the whole of Rathbone's claim. We do not think he was obliged to fix the exact value as counsel contends. His finding of fact upon evidence sufficient to support it we are not disposed to disturb.

[6] Another objection made by counsel for Rathbone is that the referee refused to receive in evidence the judgment roll in the foreclosure action. We think this was error, and that he misunderstood Judge Mayer's opinion. While alone it was not sufficient to support a liquidation of the mortgage, it was some evidence of value.

[7] Appeals are decided on the record sent up whenever possible, it being sent back only under exceptional circumstances. We can gather from the facts and figures in this record that the amount bid at the foreclosure sale, together with the prior incumbrances, interest, and taxes, would indicate a value in November, 1915, of between $152,000 and $153,000. Consideration of this evidence does not alter our conclusion.

The decree is affirmed.

Digitized by Google

(249 Fed. 458)

KANSAS CITY, C. & S. RY. CO. v. SHOEMAKER.

(Circuit Court of Appeals, Eighth Circuit. December 19, 1917.)

No. 4922.

1. RAILROADS ⟹301—MUTUAL RIGHTS AND DUTIES AT HIGHWAY CROSSINGS.
The driver of a railway motorcar had the right of way at a highway crossing over an automobile on the highway.

2. MASTER AND SERVANT ⟹137(3)—RAILROADS ⟹327(1)—LIABILITY FOR INJURIES—ACCIDENTS AT CROSSINGS.
It was the primary duty of the driver of an automobile, approaching a railroad crossing, to look and listen for engines, cars, motorcars, and other vehicles on the railroad, and to stop before colliding with any of them, and the driver of a railway motorcar had the right to rely upon the legal presumption that the automobile driver would faithfully discharge this duty, and would have been guilty of no breach of duty, or negligence towards a fellow employé riding on the motorcar, if he had seen the automobile approaching, and had driven steadily on until the collision occurred, in the faith that the automobile driver would stop, unless he perceived that the driver would not stop in time to prevent the collision, and thereafter failed to exercise reasonable care to stop the motorcar, so as to avoid the collision.

3. MASTER AND SERVANT ⟹265(3, 12)—ACTIONS FOR INJURIES—BURDEN OF PROOF.
A railway employé, suing for injuries sustained while riding on a motorcar which collided with an automobile, had the burden of proving his allegations as to the negligence of the driver of the motorcar, and that such negligence caused or directly contributed to the collision.

4. MASTER AND SERVANT ⟹285(1), 287(4)—ACTIONS FOR INJURIES—DIRECTION OF VERDICT.
Where there was no substantial evidence that the driver of the motorcar perceived, in time to stop and prevent the accident, that the driver of the automobile would not discharge his primary duty of stopping and preventing the collision, and that his failure to exercise reasonable care to stop the motorcar after so perceiving directly contributed to the injury, defendant's motion for a directed verdict should have been granted.

In Error to the District Court of the United States for the Western District of Missouri; Arba S. Van Valkenburgh, Judge.

On motion for rehearing. Rehearing denied.

For former opinion, see 245 Fed. 117, 157 C. C. A. 413.

John H. Lucas and William C. Lucas, both of Kansas City, Mo., for plaintiff in error.

J. C. Hargus, O. H. Dean, W. D. McLeod, and H. M. Langworthy, all of Kansas City, Mo., for defendant in error.

Before SANBORN and CARLAND, Circuit Judges, and BOOTH, District Judge.

SANBORN, Circuit Judge, and BOOTH, District Judge. A consideration of the argument presented and the authorities cited by counsel for the plaintiff below on this motion for a rehearing has failed to convince that the instruction refused by the trial court and considered in the opinion of this court was either erroneous or clearly given to the jury in the general charge of the court below.

Digitized by Google

Nor has the elaborate argument to the effect that there was substantial evidence of the negligence of John Green, the section man who was operating the motorcar, persuaded us that the court below rightly refused the request of the defendant below for a direction to the jury to return a verdict in its favor. The plaintiff was a fellow servant of John Green in the section gang of the railway company. They were returning from work on the south end of their section on a motorcar which Green was driving along the railroad. At a crossing of the railroad by a highway there was a collision of an automobile, which one of its occupants was driving along the highway with the motorcar and a resulting injury to the plaintiff. The highway ran east and west and the automobile came from the west. The railroad ran from southeast to northwest and the motorcar came from the southeast. Green sat on the northeast corner of the motorcar, on the side of it opposite that from which the automobile came, and did not look for or see the automobile until the collision. Two of the section men who were riding on the west side of the motorcar saw the automobile approaching, but one of them testified that he said nothing because he supposed it would stop. The railroad at the crossing was on a fill or embankment 10 or 12 feet above the surrounding country, and, within 150 feet of the crossing, the highway rose by an ascending grade to the level of the railroad.

[1, 2] The driver of the motorcar had the right of way over the crossing. The railroad itself was a warning of danger to the driver of the automobile, and it was his primary duty to use his eyes and ears to look and listen for engines, cars, motorcars, and other vehicles operating upon the railroad and to stop his car before it could collide with any of them. The driver of the motorcar had the right to rely upon the legal presumption that the driver of the automobile would faithfully discharge this duty and stop his machine in time to prevent a collision. If Green had seen the automobile approaching, and had driven his motorcar steadily on until the collision occurred, in the faith that the driver of the automobile would stop it before it reached the railroad track, as it was his duty to do, Green would have been guilty of no breach of duty or negligence, unless he perceived that the driver of the automobile would not stop it in time to prevent the collision, and thereafter failed to exercise reasonable care to stop his motorcar so as to avoid it. St. Louis & San Francisco Railroad Co. v. Summers, 173 Fed. 358, 359, 360, 97 C. C. A. 328, 329, 330; Illinois Central R. Co. v. Ackerman, 144 Fed. 959, 76 C. C. A. 13; Hart v. Northern Pacific Ry. Co., 196 Fed. 180, 188, 189, 116 C. C. A. 12, 20, 21; Denver City Tramway Co. v. Cobb, 164 Fed. 41, 43, 90 C. C. A. 459, 461; Iowa Central Ry. Co. v. Walker, 203 Fed. 685, 686, 121 C. C. A. 579, 580.

[3, 4] The plaintiff below alleged, and the burden was on him to prove, the breach of duty, the negligence of Green, the driver of the motorcar, and the fact that his negligence caused or directly contributed to the collision. Substantial evidence that Green perceived, in time to have stopped his car and to have prevented the accident, that the driver of the automobile would not discharge his primary duty, stop his car, and prevent the collision, and that his failure to exercise rea-

Digitized by Google

sonable care to stop his motorcar thereafter directly contributed to the injury of the plaintiff, was indispensable to the latter's right to recover in this action. The record in this case has been searched in vain for any substantial evidence of these facts. On the other hand, there is persuasive evidence of eyewitnesses who were upon the west side of the motorcar, and who saw the automobile approach, that when the fact appeared that its driver would not slow or stop it in season to prevent the collision, but would violate his duty and drive right on, it was too late for Green to have stopped his car, or to have avoided the collision. For these reasons we are of the opinion that the court below should have granted the request of the defendant to instruct the jury to return a verdict in its favor.

The motion for a rehearing must be denied.

CARLAND, Circuit Judge, concurs in denying the motion for rehearing.

(249 Fed. 460)

THE COLON.

(Circuit Court of Appeals, Second Circuit. January 16, 1918.)

No. 96.

1. SHIPPING ⚷84(3)—LIABILITY OF VESSELS—INJURY TO STEVEDORES.
   A ship is liable in rem for an injury to a stevedore resulting from a dangerously defective hatch cover furnished by it to the stevedores for their use.
2. SHIPPING ⚷86(2)—LIABILITY OF VESSEL—INJURY TO STEVEDORE.
   A finding by the trial court that the injury of a stevedore by the falling of a hatch cover on which he stood while helping to cover the hatch at night by artificial light was due to the fact that the covers had become worn until they were too short *held* supported by the evidence.
3. EVIDENCE ⚷75—SHIPPING—SUIT FOR INJURY TO STEVEDORE—DEFECTIVE EQUIPMENT.
   In a suit to recover for injury to a stevedore by the falling of a hatch cover, alleged to have been too short, which was marked and measured by one of the ship's officers the next morning, the failure of respondent to produce the cover or measurements *held* to justify the inference that such evidence would have shown it to be defective.

Appeal from the District Court of the United States for the Southern District of New York.

Suit in admiralty by John Ivancich against the steamship Colon; the Panama Railroad Company, claimant. Decree for libelant, and claimant appeals. Affirmed.

For opinion below, see 241 Fed. 592.

Richard Reid Rogers, of New York City, for appellant.

Lawrence B. Cohen, of New York City (William J. Martin and George V. A. McCloskey, both of New York City, of counsel), for appellee.

Before WARD and HOUGH, Circuit Judges, and LEARNED HAND, District Judge.

⚷For other cases see same topic & KEY-NUMBER in all Key-Numbered Digests & Indexes

Digitized by Google

WARD, Circuit Judge. April 6, 1915, the steamer Colon was being loaded at Pier 67, North River. The stevedores had been stowing cargo in the wings of the lower hold at hatch 32, when at 9:30 p. m., they were called up by the foreman and told to put the hatch covers on the orlop deck hatch. In this hatch there were two iron strongbacks running athwartships between the coamings, and on these rested two wooden strongbacks running fore and aft. This divided the hatch into three fore and aft sections, each of which required 12 hatch covers, about 2 feet wide and 3 inches thick. The covers for the starboard section were piled on the starboard side of the hatch, of the middle section on the after end, and of the port section on the port side. There was a shoulder 1⅜ inches wide on the coamings and on each side of the wooden strongbacks, on which the ends of the covers were designed to rest, with a play of about half an inch.

The libelant and his partner took the first cover from the starboard pile, each holding one end, and placed it at the after end of the starboard section. They then took the next cover and put it in place; the libelant standing on the first cover and his partner on the deck. They proceeded in this way until they had placed the seventh cover, when the libelant, standing upon the sixth cover, turned around to go with his partner to get the eighth cover. The sixth slipped from place, and he fell into the lower hold, sustaining serious injuries. Judge Hazel found that the accident was due to the defective condition of the sixth hatch cover, by wearing at the ends, and entered a decree for the libelant.

[1] There can be no doubt of the liability of the vessel in rem, if the accident was caused by a defective hatch cover furnished to the stevedores. The Rheola (C. C.) 19 Fed. 926; The King Gruffydd, 131 Fed. 189, 65 C. C. A. 495; I. M. M. Co. v. Fleming, 151 Fed. 203, 80 C. C. A. 479.

[2] The claimant's theory, that a cover belonging to the middle section, which was narrower than the port or starboard sections, had been negligently placed by the stevedores in the pile of covers for the starboard section, is not sustained by the proofs. No. 2 hatch on the orlop deck was measured, as well as the clearances of the port, middle, and starboard sections, together with the width of the shoulders on each, and reduced to a diagram by Glasser, a city surveyor, for the libelant. Stone, the chief officer of the steamer, did the same thing for the claimant. Considering first the plan drawn by Glaser: He gives the width of the shoulders, both on the coamings and strongbacks, as 1⅜ inches. If we add the full 2⁶/₈ inches to his measurement of clearance in the middle section we get 5 feet 1½ inches, which would not cover 5 feet 1⅝ inches, his measurement of the clearance in the starboard section.

Stone's diagram would allow a middle section cover to just stay in place in the starboard section, if adjusted with the greatest care. He gives the distance between the strongbacks in the middle section as 5 feet 2 inches, and between the strongback and the coaming in the starboard section 5 feet 4 inches. If we subtract 2⁶/₈ inches, the

Digitized by Google

width of the shoulders, from the starboard section, we get a clearance of 5 feet 1¼ inches, so that, allowing a play of half an inch to the cover for the middle section, it would be 5 feet 1½ inches put in a space of 5 feet 1¼ inches. The least lateral movement would cause it to fall.

Therefore we are satisfied that the accident did not occur because a middle section cover was put in the starboard section. The cover must have fallen, as the District Judge found, because it was too short for safety, probably as the result of being worn at the ends. We suspect that when one of the stevedores, who was a foreigner, spoke of wearing at the corners, he meant ends.

[3] One of the stevedores marked the cover when it was examined the next morning. The failure of the claimant to preserve it, and to produce the measurements taken by the ship's carpenter and written down by the superintending engineer that morning, justifies the inference that the cover and the measurements, if produced, would have shown defective equipment. The Phœnix (D. C.) 34 Fed. 760, 762; The Lackawanna, 210 Fed. 262, 127 C. C. A. 80; The Bertha F. Walker, 220 Fed. 667, 136 C. C. A. 309.

The cases cited by the libelant of defective ropes and other equipment not in the actual charge of the injured party are not wholly applicable to a case like this, where he handled and placed the hatch cover said to be defective. If it was as much as an inch and a half too short, as the libelant's witnesses say, care on his part might have caused him to reject it or to chock it at both ends. Failure to do so might be regarded as negligence, which would entitle him to recover only half damages. But, as the work was being done at night, in artificial light, we are not disposed, in view of all the circumstances, to disturb the finding of the District Judge.

Decree affirmed.

(249 Fed. 462)

THOMPSON BELDEN & CO. et al. v. LEISY BREWING CO.

In re MOISE.

(Circuit Court of Appeals, Eighth Circuit. February 23, 1918. Rehearing Denied May 29, 1918.)

No. 4952.

BANKRUPTCY ⟹314(3) — INTOXICATING LIQUORS ⟹147 — SALES — WHERE MADE.

Where a brewing company located in Illinois gave to the bankrupt the exclusive right to sell its beer at wholesale, the same to be delivered f. o. b. at Omaha, Neb., the sales must be deemed to have occurred in Illinois, where the brewing company was licensed, so the company was entitled to have allowed its claim against the bankrupt, based on sales made under the contract, though it was not licensed in Nebraska to sell intoxicating liquors.

Appeal from the District Court of the United States for the District of Nebraska; J. W. Woodrough, Judge.

In the matter of the bankruptcy of Walter Moise. The claim of

---

⟹For other cases see same topic & KEY-NUMBER in all Key-Numbered Digests & Indexes

Digitized by Google

the Leisy Brewing Company was rejected by the referee, and, the order being reversed, and claim allowed on petition to review, Thompson Belden & Co. and other creditors, whose claims had been allowed, were permitted to appeal, the trustee declining. Affirmed.

F. S. Howell, of Omaha, Neb. (W. J. Connell, of Omaha, Neb., on the brief), for appellants.

Arthur F. Mullen, of Omaha, Neb. (F. A. Mulfinger, of Omaha, Neb., on the brief), for appellee.

Before HOOK and SMITH, Circuit Judges, and TRIEBER, District Judge.

TRIEBER, District Judge. The only question involved is whether, upon the undisputed facts, the appellee was entitled to have its claim against the bankrupt estate of Walter Moise allowed. The claim was rejected by the referee in bankruptcy, and on a petition to review the order of the referee was by the District Court reversed, and the claim ordered to be allowed. The trustee declining to appeal from the decision of the District Court, appellants, creditors of the bankrupt, whose claims had been allowed, were permitted to prosecute this appeal.

The facts are that the contract between the bankrupt and the appellee, a brewing company located at Peoria, in the state of Illinois, gave to the bankrupt the exclusive right to sell at wholesale its beer in certain territory, to be delivered in carload lots "f. o. b." at Omaha, Neb., at certain prices set out in the contract, and also to pay the freight on all its empty cooperage, cases and bottles, returned to it by the bankrupt, in carload lots. By a subsequent agreement the appellee agreed to furnish for the use of the bankrupt in the handling and delivery of its beer sufficient trucks and keep them in repair. The statutes of the state of Nebraska (Ann. St. 1911, § 4231 [chapter 50, § 11]) require all persons selling malt or other intoxicating liquors to procure a license and pay the tax prescribed. Any person selling them without having procured such license is guilty of a misdemeanor, and section 4231a (section 11a) provides:

"That in all cases where the purchase price for intoxicating liquors is paid to the person who makes manual delivery of any such liquors to the vendee thereof, the sale shall be held to have been made in the county where delivery and payment were made, as aforesaid."

The evidence also shows that the appellee was lawfully empowered to sell liquors at Peoria, in the state of Illinois, the place the beer was manufactured and shipped from to the bankrupt at Omaha, Neb.

The contention of the appellants is that as the beer was, under the contract between the parties, to be shipped to Omaha, the appellee to pay the freight, the sale was made there, and, appellee not having procured a license there, it cannot recover. Benbrook v. United States, 186 Fed. 153, 108 C. C. A. 265, rules this case and leads to an affirmance. The trial judge in that case had charged the jury:

"If you find the defendant, on receiving word that Joe Liles wanted medicine, or wanted whisky, on one or more occasions took from his place of

Digitized by Google

business a pint of whisky, and carried it and delivered it to Joe Liles, and collected the pay therefor at Joe Liles' boarding house in another part of the town of Fayetteville, then the * * * sale was made when the whisky was delivered and the money collected; * * * and if you should so find, and further find that, when such sales occurred, defendant had not paid the special tax to sell liquor at Joe Liles' boarding house, * * * then you should find him guilty as charged in the indictment."

The court reversed the conviction, and spoke through Judge Adams:

"According to this interpretation of the law, the large dry goods stores of our cities would be 'carrying on business' at the residences of their customers, provided they took orders at their stores for goods to be delivered and paid for at the residences. The usual and accepted meaning of these words, when applied to present methods of transacting business, would not, in our opinion, warrant such interpretation."

To the same effect are Jones v. United States, 170 Fed. 1, 95 C. C. A. 213, 24 L. R. A. (N. S.) 143; United States v. Lackey (D. C.) 120 Fed. 577; Wagner v. Breed, 29 Neb. 720, 732, 733, 46 N. W. 286; State v. Davis, 62 W. Va. 500, 60 S. E. 584, 14 L. R. A. (N. S.) 1142; Commonwealth v. Fleming, 130 Pa. 138, 18 Atl. 622, 5 L. R. A. 470, 17 Am. St. Rep. 763.

The judgment of the District Court is affirmed.

(249 Fed. 464)

UNITED STATES v. DENVER & R. G. R. CO.

(Circuit Court of Appeals Eighth Circuit. February 23, 1918.)

No. 4937.

MASTER AND SERVANT ⟹13—HOURS OF SERVICE ACT—VIOLATION—LIABILITY—"PERMITTED."

Where a telegraph operator employed by defendant, who performed duties for and was subject to the orders of a second railroad company, which through an accounting between the two companies made contributions to his salary, was required by the second company to remain on duty longer than allowed by Hours of Service Act March 4, 1907, c. 2939, 34 Stat. 1415 (Comp. St. 1916, §§ 8677–8680), defendant is liable for the penalty prescribed, whether the operator be treated as a joint employé of the two companies or as an employé of defendant alone, for in any case defendant was bound to see that such operator did not remain on duty for an excess period, and, if defendant failed, it "permitted" the operator to perform excess service in violation of the act.

[Ed. Note.—For other definitions, see Words and Phrases, First and Second Series, Permit.]

In Error to the District Court of the United States for the District of Colorado; Robert E. Lewis, Judge.

Action by the United States against the Denver & Rio Grande Railroad Company to recover a penalty for violation of the Hours of Service Act. There was a judgment for defendant, dismissing the action, and plaintiff brings error. Reversed.

⟹For other cases see same topic & KEY-NUMBER in all Key-Numbered Digests & Indexes

Digitized by Google

John A. Gordon, Asst. U. S. Atty., of Denver, Colo., and Philip J. Doherty, Sp. Asst. U. S. Atty., of Washington, D. C. (Harry B. Tedrow, U. S. Atty., of Denver, Colo., on the brief), for the United States.

J. G. McMurry, of Denver, Colo. (E. N. Clark, of Denver, Colo., on the brief), for defendant in error.

Before CARLAND, Circuit Judge, and AMIDON and MUNGER, District Judges.

AMIDON, District Judge. This is an action by the United States against the Denver & Rio Grande Railroad Company to recover a penalty for violation of the Hours of Service Act. The alleged violation grows out of permitting a telegraph agent at the station of Portland, in Colorado, to remain on duty beyond the limits fixed by the statute. The defendant's line is intersected at that point by the line of the Santa Fé Road. The operator is employed by the Rio Grande Company, and paid by it, and then the Santa Fé makes its contribution to the salary through the accounting between the two companies. The agent was, however, by reason of a contract between the companies, subject to the direction of the train dispatcher and officers of each company in the performance of his duties. The case was tried upon the pleadings and an agreed statement of facts. The trial court dismissed the action, and the government appeals.

The following is a summary of the controlling facts, somewhat reduced from the statement in the brief of counsel for the government. The operator was a joint employé of the defendant and the Santa Fé Company. For the services performed for the defendant the agent received his instructions directly from its chief dispatcher and other officials, and for services performed for the Santa Fé he received his instructions directly from the chief dispatcher and other officials of that company. The regular hours of his service were from 7:15 a. m. to 7:15 p. m. On June 17, 1915, he went on duty at his regular time at 7:15 a. m., and remained on duty until 8:45 p. m. Knowing that a train on the Santa Fé line was due to pass Portland about 7 o'clock p. m., he inquired of the train dispatcher of that company about handling said train, and was advised by the train dispatcher that the train might be expected through Portland at any time after 7 o'clock, and that he should attend to it on its arrival, giving it proper clearance through the interlocking plant. In response to this order he remained on duty until the train arrived at 8:45 p. m. and performed the desired service. The officers, agents and representatives of defendant, except only the operator himself, were not aware of the instructions of the train dispatcher of the Santa Fé, just referred to, nor of the operator's intention to remain on duty. After 7:15 p. m. the operator performed no service for defendant, but his services from 7:15 to 8:45 were wholly for the Santa Fé Company in the clearance of said train. For the overtime involved in this service defendant paid the operator, and was repaid by the Santa Fé Company. The officers and agents of the defendant, who allowed and paid the op-

Digitized by Google

erator's claim for overtime, had no knowledge that the overtime claimed by him involved a violation of the Hours of Service Act.

The decision of the trial court was wrong. That is so whether the agent be treated as the joint employé of both companies, or as an employé of the Rio Grande Company who, by arrangement between the two railroad companies, was subject to direction by the Santa Fé. It may be that if the government had sued the Santa Fé it would have been liable because it "required" the excess service. It does not follow, however, that the Rio Grande was not also liable. The agent was its agent, was employed and paid by it, and was at the post of duty to which that company assigned him. It could not escape liability by showing that the Santa Fé Company was the more primary cause of the excess service. Its duty under the statute still remained imperative. It was bound to see to it that the agent did not remain on duty for an excess period. If it failed to discharge that duty, it "permitted" the employé to perform the excess service, and was liable to the penalty fixed by the statute.

The judgment is reversed.

(249 Fed. 466)

BERGEN POINT IRON WORKS v. SHAW.

(Circuit Court of Appeals, Fifth Circuit. March 14, 1918.)

No. 3190.

TRIAL ⟹238—INSTRUCTIONS.

Where, in a personal injury action, the court, in submitting the defense of assumption of risk, severely criticized that doctrine, and the jury, for an injury to an employé's arm similar to a sprained ankle, awarded $7,500 damages, the act of the court, in improperly accompanying the instruction with a criticism calculated to prevent the jury from applying the doctrine, was harmful, and necessitates reversal.

In Error to the District Court of the Canal Zone; William H. Jackson, Judge.

Action by William E. Shaw against the Bergen Point Iron Works. There was a judgment for plaintiff, and defendant brings error. Reversed and remanded.

Chauncey P. Fairman, of Cristobal, C. Z., for plaintiff in error.

Theodore C. Hinckley and Stevens Ganson, both of Panama, R. P., for defendant in error.

Before PARDEE, WALKER, and BATTS, Circuit Judges.

BATTS, Circuit Judge. Plaintiff (William E. Shaw, defendant in error) instituted suit against defendant (Bergen Point Iron Works, plaintiff in error) for damages for injuries to him as an employé, when, helping cut rivets, he held a bar against a defective rivet, which "hurriedly broke" when his fellow employé struck the bar. The testimony of a physician introduced by plaintiff indicates the character of the injury:

⟹For other cases see same topic & KEY-NUMBER in all Key-Numbered Digests & Indexes

Digitized by Google

"Q. Will you please state in what condition you found the arm of the plaintiff, Shaw? A. The most noticeable thing is a little loss of extension; he does not have quite complete extension. * * * Q. In this case, the plaintiff having that injury, does it affect the movement of the arm? A. Yes; I should say at present he has a partial disability. I would not like to go on record that it will be of a permanent nature. It might improve in several months, or a year or two; but, as it has gone this length of time, it might be that he is liable to have some partial permanent disability there. Q. Doctor, are there any broken bones? A. Yes; we call such a condition a fracture, where the ligaments are detached from the joints. Q. It might be compared to a very severe sprained ankle? A. Yes. Q. In other words, it would be similar to a sprained ankle? A. Yes."

A verdict for $7,500 was returned.

The evidence was such as to call for a charge upon assumed risk. Charges drawn by defendant were tendered, but refused; the refusal being excused upon the ground that the substance had been given in the general charge. That part of the court's charge covering the matter of assumed risk was as follows:

"And then, again, another question would be, if the foreman assumed the responsibility of assuring that it was safe, and that no scaffold was necessary, and that they had to go to work without a scaffold, then I would say, as a matter of law, that he then took that share of responsibility upon himself, or recognized that his duty was to furnish a safe place; but if, after that, the plaintiff assumed to go there and work upon the place, knowing that it was unsafe, with his own eyes open, knowing that it was unsafe, then, although it was unsafe, and although the duty of making it safe was upon the defendant company, if, nevertheless, he went there with knowledge of that fact, and entered upon the work, and injury resulted, he would, as a matter of law, be held to have assumed the risk of working about an unsafe place.

"Now, that has been considered a very harsh principle of law, so much so that Congress has enacted legislation abolishing the defense of fellow servant, contributory negligence, and assumption of risk in certain cases different from this. It is an old law, that has come down to us from generations; that of defense of fellow servants, the defense of contributory negligence, and the defense of the assumption of risks. A great many law writers and distinguished men have discussed this question, and all have arrived at the conclusion that it is unfair and unjust, because a man whose bread and butter and the support of his family depends upon keeping his employment had to go to work in a dangerous place, that it was unfortunate that he should be deprived of his right of earning a living if he went to work in a dangerous place, knowing it to be dangerous. So Congress, in the exercise of its powers over all matters over which Congress has control, has enacted a law abolishing that defense of assumed risk, the defense of fellow servant, and the defense of contributory negligence in certain cases.

"But this is not one of those cases. In this case the old law still prevails, and, as hard as it may seem, that is, if a man, knowing his bread and butter and the support of himself and family depend upon it, goes to work deliberately in a dangerous place, knowing it to be dangerous, and takes that risk, he cannot complain, and he must accept it."

The defendant is not only entitled to a statement of the law in the charge of the court, but is entitled to have it placed before the jury unaccompanied by criticism well calculated to prevent its proper application. It would have been difficult for the jury to regard the attack on the law other than an invitation to nullify, by findings of fact, features objectionable to the court. The damages assessed by the jury

Digitized by Google

indicate that the court's denunciation of the law was not without effect.

The conclusion reached with reference to the refusal to give the charge requested, taken in connection with the objectionable part of the charge quoted, renders it unnecessary to consider the other assignments of error.

The judgment is reversed, and the cause remanded for a new trial. Reversed and remanded.

(249 Fed. 468)

Petition of MOULTHROP.

In re GREENBAUM.

(Circuit Court of Appeals, Sixth Circuit. April 2, 1918.)

No. 3087.

1. BANKRUPTCY ⟹243—EXAMINATION INTO AFFAIRS OF BANKRUPT—EVIDENCE.

Where in the course of an investigation of the bankrupt's affairs under Bankr. Act July 1, 1898, c. 541, § 21a, 30 Stat. 551 (Comp. St. 1916, § 9605), the testimony of a large number of witnesses was taken stenographically before the referee, the bankrupt, in view of sections 39a(3), 47a(5), and 49a (Comp. St. 1916, §§ 9623, 9631, 9633), as well as a local bankruptcy rule declaring that no copies of testimony shall be furnished at the expense of the state, is entitled, on paying the charge fixed, to a stenographic copy of such testimony, for he must be deemed a party in interest to investigation of his affairs.

2. BANKRUPTCY ⟹243—EXAMINATION INTO AFFAIRS OF BANKRUPT—EVIDENCE.

In such case, the fact that the testimony has not been read over and signed by the witnesses as required by General Order No. 22, or that it could not be used in evidence against the bankrupt, cannot affect his right to inspection and a copy.

3. BANKRUPTCY ⟹243—EXAMINATION INTO AFFAIRS OF BANKRUPT—EVIDENCE.

In such case, trustee's denial by answer that his petition, on which was issued an order to show cause why the bankrupt should not surrender and deliver certain personal property as well as cash, was based upon testimony of some or all of the witnesses, does not affect the right of the bankrupt to a copy of such testimony.

Petition to Revise an Order of the District Court of the United States for the Eastern District of Michigan, in Bankruptcy; Arthur J. Tuttle, Judge.

In the matter of the bankruptcy of Joseph Greenbaum. Petition by Harry C. Moulthrop, trustee in bankruptcy, to revise an order of the District Court. Order affirmed.

B. J. Lincoln and Clark, Emmons, Bryant & Klein, all of Detroit, Mich. (Butzel & Butzel, of Detroit, Mich., of counsel), for petitioner.

Selling & Brand, of Detroit, Mich., for respondent.

Before KNAPPEN and DENISON, Circuit Judges, and HOLLISTER, District Judge.

⟹For other cases see same topic & KEY-NUMBER in all Key-Numbered Digests & Indexes

Digitized by Google

PER CURIAM. On the petition of the trustee, an order was made requiring the bankrupt to surrender and deliver to that officer certain personal property amounting in value to upwards of $26,000, and to pay over to the trustee upwards of $1,800 in cash, alleged to have been concealed from the trustee by the bankrupt. In default of such delivery the bankrupt was ordered to show cause, on a day certain, why he should not be required so to do.

In the course of an investigation by the trustee of the bankrupt's affairs, had under section 21a of the Bankruptcy Act, which resulted in the order just mentioned, the testimony of a large number of witnesses was taken stenographically before the referee, without notice to and in the absence of the bankrupt. The testimony was transcribed at the expense of the estate, a copy filed in the cause, and another copy given the trustee. A local bankruptcy rule allows to the referee a folio charge for clerical assistance in taking and transcribing such testimony, and provides:

"No copies of testimony to be furnished at the expense of the estate. Parties ordering copies of the testimony to pay therefor at the rate of ten cents per folio."

The bankrupt informally requested a copy of this testimony, for the purpose of enabling him to prepare his answer to the order to show cause above mentioned Such copy was, on the trustee's request, withheld by the referee, who later denied the bankrupt's formal petition for such copy, accompanied by offer to pay for the same. On review of this order the District Judge, in a carefully considered opinion (243 Fed. 965), concluded that whatever might have been the case had the testimony not been filed, yet being so filed it became a part of the public records of the cause, to a copy of which the bankrupt was entitled under the bankruptcy act and the local rule referred to, and accordingly reversed the referee's order. The present proceeding is brought to review this order of reversal.

[1-3] We think the District Judge rightly directed that the bankrupt be furnished a copy of the testimony. Its taking was expressly authorized by section 21a of the act, which we think intended for the benefit not only of creditors, but of the bankrupt. The language of the statute, which provides that the testimony may be taken before the court, prima facie contemplates a more or less public proceeding; and, while the bankrupt is not entitled to notice, yet, without reference to whether he could be excluded from a public examination taken under order of the court (see Black on Bankruptcy, § 259, note 14), we think that, in the absence of express prohibition in the bankruptcy act, the testimony having been paid for out of the funds of the estate and having become part of the files and records of the case, any person interested therein was entitled, both under the general law [1] and in view of the general policy of the bankruptcy act as evidenced by sections 39a(3), 47a(5), and 49a, to see the testi-

[1] Daly v. Dimock, 55 Conn. 579, 12 Atl. 405; Brewer v. Watson, 61 Ala. 310; Ferry v. Williams, 41 N. J. Law, 332, 32 Am. Rep. 219.

Digitized by Google

mony and, under the local rule referred to, to have a copy of it on paying the fees therefor.

Neither the fact that the testimony has not been read over and signed by the witness (as provided by General Order No. 22, 89 Fed. x, 32 C. C. A. xxv), nor that it cannot be used as evidence against the bankrupt, can affect the right to inspection and copy. The lessening thereby of the probative value of the testimony does not take away the right of interested parties to have access to it. The trustee's denial, by answer, that his petition on which the order to show cause issued "is based upon the testimony of some or all of the said witnesses," does not impress us.

It is plain, to our minds, that the bankrupt is a party in interest with respect to proceedings whose object is to require a transfer of property under pain of contempt proceedings, and which may result in criminal proceedings under section 29 of the act. We cannot think that public interests will be endangered by furnishing the copy in question, especially as all the evidence had been taken two months or more before the copy was requested.

The order of the District Court is, accordingly, affirmed.

(249 Fed. 470)

GREGORAT v. UNITED STATES.

(Circuit Court of Appeals, Fifth Circuit. March 7, 1918.)

No. 3060.

1. PERJURY ⟹26(½)—NATURALIZATION—OFFENSES—INDICTMENT.

An indictment alleging that, in violation of Act June 29, 1906, c. 3592, § 23, 34 Stat. 603 (Comp. St. 1916, § 4379), defendant in a naturalization proceeding testified that he had never operated a saloon, or been arrested or charged with crime, or found guilty of violating any state law, whereas in fact it was not and is not true, and at the time of so testifying defendant did not believe it to be true, that he had not operated a saloon, etc., is sufficient against an objection that the indictment did not affirmatively state that defendant had operated a saloon, etc.

2. PERJURY ⟹25(1)—NATURALIZATION—OFFENSE—SCOPE OF STATUTE.

Under Act June 29, 1906, § 23, an indictment charging that defendant in a naturalization proceeding knowingly gave false testimony as to a material fact need not aver that the fact was one required to be proven in such proceeding; that requirement being applicable only to affidavits.

3. CRIMINAL LAW ⟹1169(3)—APPEAL—HARMLESS ERROR.

In a prosecution for knowingly giving false testimony in a naturalization proceeding, the admission of a transcript of the stenographer's notes of the proceeding was harmless, where defendant himself testified to the same facts shown by the transcript.

4. PERJURY ⟹26(3)—NATURALIZATION—INDICTMENT—SUFFICIENCY.

Under Act June 29, 1906, § 23, punishing one who knowingly gives false testimony in a naturalization proceeding, an indictment alleging that defendant did unlawfully, willfully, and knowingly give false testimony is sufficient, though not averring defendant took the oath falsely, willfully, and knowingly.

5. CRIMINAL LAW ⟹1128(1)—ERROR—REVIEW—QUESTIONS PRESENTED.

In a prosecution under Act June, 1906, § 23, for knowingly giving false testimony in a naturalization proceeding, the question whether it was

---

⟹For other cases see same topic & KEY-NUMBER in all Key-Numbered Digests & Indexes

Digitized by Google

error for the court in its charge to the jury to incorporate that section of the Criminal Code (Act March 4, 1909, c. 321, § 125, 35 Stat. 1111 [Comp. St. 1916, § 10295]) defining perjury cannot be reviewed on writ of error, where the facts developed by the evidence were not shown by the record.

6. CRIMINAL LAW ⟹1090(8)—ERROR—EXCEPTIONS—NECESSITY.
The sufficiency of the evidence to sustain a conviction cannot be reviewed on writ of error, in the absence of exceptions and a bill of exceptions incorporating therein the evidence.

In Error to the District Court of the United States for the Eastern District of Louisiana; Rufus E. Foster, Judge.

Josef Domenick Gregorat was convicted of violating Act June 29, 1906, § 23, in that he knowingly did give, in a naturalization proceeding, false testimony as to a material fact, and brings error. Affirmed.

Louis H. Burns, of New Orleans, La., for plaintiff in error. Joseph W. Montgomery, U. S. Atty., of New Orleans, La.

Before WALKER and BATTS, Circuit Judges, and NEWMAN, District Judge.

BATTS, Circuit Judge. [1] Plaintiff in error was indicted for violation of section 23 of the act of June 29, 1906, in that he "knowingly did give, in a naturalization proceeding, false testimony as to a material fact." The indictment alleges that in a naturalization proceeding Gregorat testified that he had never operated a saloon, nor been arrested, nor charged with the commission of crime, nor found guilty of violating any state law. The indictment is attacked upon the ground that it does not affirmatively state that the defendant had operated a saloon, and that he had been arrested and charged with the commission of a crime, and that he had been found guilty of violating a state law; the allegation of the indictment being:

"Whereas, in fact, it was not and is not true, and at the time of so swearing and deposing the said Josef Domenick Gregorat did not believe it to be true, that he had not operated a saloon, or that he had never been arrested or charged with the commission of a crime of any kind, or that he had never been found guilty of violating any state law," etc.

Under the formerly well-recognized rules with reference to indictments in cases of perjury and false swearing, the indictment would doubtless have been insufficient. In any writing, other than an indictment, a statement that "it is not true that he did not operate a saloon" would be accepted as equivalent to a statement that "he did operate a saloon." There is no reason why a different rule should apply to indictments. Instead of being insufficient for lack of words, the indictment under consideration demonstrates that there is much still to be accomplished in the matter of simplification of indictments. The objection to the indictment is not sustained.

[2] The indictment is objected to upon the ground that it does not charge that the defendant gave false testimony as to a material fact "required to be proved in such proceeding." The quoted clause of the section is applicable alone to affidavits.

⟹For other cases see same topic & KEY-NUMBER in all Key-Numbered Digests & Indexes

Digitized by Google

[3] The transcript of part of the notes taken by the stenographer at the trial of the naturalization proceeding was introduced in evidence upon what the defendant asserts was an insufficient identification, and over his objection that the notes constituted the better evidence. The notes were not available, and could not have been used if they had been. That the transcribed notes represented the facts was established by the defendant's own testimony and otherwise. Even if the evidence was improperly admitted, no harm resulted to defendant.

[4] Another objection to the indictment is that it does not charge that the defendant "took the oath falsely, willfully, and knowingly." The statute punishes one "who knowingly gives false testimony." The indictment alleges that the defendant did "unlawfully, willfully, knowingly," do the things denounced by the law.

[5] The charge of the court is objected to in the brief for plaintiff in error on the ground that it incorporated section 125 of the Criminal Code, which defines perjury. The elements of the crime defined by section 125, and of that defined by section 23 of the act of June 29, 1906, are substantially the same, and the indictment was doubtless good under either. The charge was probably sufficient and unobjectionable, notwithstanding the reading of section 125. No bill was taken to this assumed error, the facts developed by the evidence are not fully before us, and the matter cannot be passed upon.

[6] A question raised by the brief of plaintiff in error as to the sufficiency of the evidence cannot be determined, in the absence of an exception and a bill incorporating the evidence. That part of the evidence incorporated in other bills indicates that the finding of the jury was justified.

The judgment is affirmed.

(249 Fed. 472)

In re KEANSBURG STEAMBOAT CO.

(Circuit Court of Appeals, Second Circuit. January 16, 1918.)

No. 100.

SHIPPING ⟹166(3)—INJURY TO PASSENGERS—LIABILITY OF VESSEL.

The injury of two women passengers on a steamer, by stepping on a line which was being handled by a mate and two deck hands in a narrow passageway at the side of the boat as she was leaving her pier, although they were twice warned by the mate to stop, because the line had fouled at the pier end and was being allowed to run out through a chock, *held* due to their own negligence, for which the vessel was not liable.

Appeal from the District Court of the United States for the Southern District of New York.

Petition in admiralty by the Keansburg Steamboat Company, as owner of the steamboat Keansburg, for limitation of liability. From a decree holding the boat liable for an injury to passengers, petitioner appeals. Reversed.

⟹For other cases see same topic & KEY-NUMBER in all Key-Numbered Digests & Indexes

Digitized by Google

Alexander & Ash, of New York City (Mark Ash, of New York City, of counsel), for appellant.

House, Grossman & Vorhaus, of New York City (Charles Goldzier and Frederick Hemley, both of New York City, of counsel), for appellees.

Before WARD, ROGERS, and HOUGH, Circuit Judges.

WARD, Circuit Judge. June 8, 1916, the Keansburg Steamboat Company filed this petition to limit its liability for claims made against it by two passengers for personal injuries and at the same time denied liability therefor. The steamboat was appraised at $10,000, with pending freight of $195, and the petitioner gave a stipulation for value in the aggregate amount.

June 20, 1915, at about 7:50 p. m., the steamboat, with her full complement of passengers, left her wharf at Keansburg, N. J., on one of her regular trips to New York City. Her starboard side was made fast to the wharf. The forward mooring lines were cast off, leaving a 5½-inch line which led forward from a bitt on the starboard quarter of the main deck through a chock about 40 feet to a pile, the free end lying coiled on the deck. In accordance with the usual practice the engines were started astern, so as to throw the steamboat's bow to port, and the mate and two deckhands stood by to haul in this stern line as soon as the engines went ahead with the helm astarboard and the boat's quarter got abreast of the pile. But after the line was cast off from the bitt it fouled on the pile, and the mate ordered the men to let it run out through the chock, with the intention of picking it up again on the return trip. So far all was regular and proper.

Aft of the bitt and chock there was a very narrow passage, tapering alongside the house to the stern, where a row of passengers were sitting on camp stools alongside of the house; the furthest of them being Mrs. Mary Flaxbarth and her daughter Florence. They, seeing on the deck beyond the mate and the two deckhands, another sister, with her husband, belonging to their party, rose from their seats with the intention of joining them, and pushed forward past and against the remonstrances of the passengers sitting ahead of them. The mate twice called out to them to stop, but they either did not hear or did not understand him. Mrs. Flaxbarth stepped upon or against the line which was running out through the chock and fell forward, while her daughter, in an effort to help her, stepped into a bight of the line, was pulled forward against the bitt, and sustained severe injuries to her left ankle. Such a fouling of the line as occurred sometimes, but not frequently, happens. These ladies, as claimants, answered the petition, charging the petitioner with negligence in permitting a line to lie loose upon the deck and to run out when passengers were standing and walking in the neighborhood.

The foregoing is intended to be, and we think is, a correct statement of the facts found by the District Judge. Being of opinion on these findings that the petitioner was guilty of a lack of care for not protecting its passengers against such a danger, and that they them-

Digitized by Google

selves were not guilty of negligence, he entered a decree in favor of the claimants. Although the happening of an accident to a passenger makes a prima facie case of liability against the carrier, we cannot concur in the conclusion of the court below. It seems to us that the place where the claimants were sitting was a proper one for passengers, and of course it was a proper place for the bitt, chock, and line to be. The presence of the mate and two deck hands to handle the line was a sufficient precaution against danger from its fouling with the pile. The mate had no reason to expect that passengers would try to force their way through this narrow place, not more than 5 feet at the widest part, where the crew was at work preparatory to the departure of the boat. When he saw them coming, his twice repeated warning was sufficient to stop persons of ordinary prudence. If they had done so, no accident would have happened. Carriers of passengers are not insurers. They have a right to suppose that their passengers will exercise ordinary prudence and common sense. They are held to a degree of care according to the circumstances. Race v. Union Ferry Co., 138 N. Y. 644, 34 N. E. 280; Savage v. Steamship Co., 185 Fed. 778, 107 C. C. A. 648. We think the claimants, on the facts found, were injured because of their own recklessness.

The decree is reversed.

(249 Fed. 474)

PENNSYLVANIA CO. v. AVRAN.

(Circuit Court of Appeals, Sixth Circuit. March 15, 1918.)

No. 3095.

1. RAILROADS ⟹346(5)—CROSSING ACCIDENTS—CONTRIBUTORY NEGLIGENCE—BURDEN OF PROOF.

   In a crossing accident case, a railroad company, asserting the traveler's contributory negligence, has the burden of proof.

2. APPEAL AND ERROR ⟹927(7)—REVIEW—DIRECTED VERDICT.

   Where the denial of defendant's motion for directed verdict was assigned as error, the testimony must by the appellate court be taken most strongly against defendant; the jury having found for plaintiff.

3. RAILROADS ⟹350(15)—CROSSING ACCIDENT—JURY QUESTION—CONTRIBUTORY NEGLIGENCE.

   In an action by plaintiff, who was struck by a train while crossing defendant's tracks on foot about 8:30 on a May evening, the question whether plaintiff, who with her companions walked around the front end of a standing yard engine, which had been obstructing the crossing for longer than allowed, was guilty of contributory negligence, the view being obstructed by smoke, *held*, under the evidence, for the jury.

In Error to the District Court of the United States for the Northern District of Ohio; D. C. Westenhaver, Judge.

Action by Mary Avran against the Pennsylvania Company. Judgment for plaintiff, and defendant brings error. Affirmed.

Squire, Sanders & Dempsey, of Cleveland, Ohio, for plaintiff in error.

Gage, Day, Wilkin & Wachner, of Cleveland, Ohio (Luther Day, of Cleveland, Ohio, of counsel), for defendant in error.

⟹For other cases see same topic & KEY-NUMBER in all Key-Numbered Digests & Indexes

Digitized by Google

Before WARRINGTON, KNAPPEN, and DENISON, Circuit Judges.

PER CURIAM. Defendant in error was struck and injured by defendant's train while crossing on foot, defendant's railroad tracks on Third street, in Canton, Ohio, at about 8:30 o'clock on an evening in May. There was substantial evidence tending to support each of the allegations of negligence submitted to the jury, viz. an excessive speed of the train, failure to give warning of the train's approach by bell and whistle or otherwise, and failure to maintain a gate at the west side of the crossing. The only point made here (raised by motion to direct verdict) is that, as matter of law, plaintiff was guilty of contributory negligence.

[1-3] Third street runs east and west. Defendant's four tracks cross the street diagonally. There was substantial evidence that when plaintiff, with several companions, walking east on Third street, reached the first of defendant's tracks, the crossing was nearly covered by a standing yard engine with cars attached; that, after waiting a longer time than the engine could lawfully occupy the crossing, plaintiff and her companions walked around the front end of the engine, then to the second track, where she stopped, listened, and looked in each direction, and, seeing and hearing no approaching train, proceeded to the third track, where she again listened and looked in both directions, with like result, and then stepped upon the third track, when she was struck by defendant's engine drawing the Twentieth Century Limited. It appeared by the testimony of plaintiff and others that she was prevented by the presence of smoke from seeing the approaching engine and by the yard noises from hearing it.

The specific contention is that it was contributory negligence, as matter of law, for plaintiff to cross under these conditions. This contention must be rejected. While the testimony presented a question of fact as to plaintiff's negligence, it was not conclusive. Erie R. R. Co. v. Weber (C. C. A. 6) 207 Fed. 293, 125 C. C. A. 37. That the burden of proof of contributory negligence was on defendant, and that the testimony must, on this review, be taken most strongly in plaintiff's favor, are commonplaces. The case differs from Memphis Street Ry. Co. v. Bobo, 232 Fed. 708, 712, 146 C. C. A. 634, for the reason, if for no other, that it there appeared that the conductor whose negligence was in question "knew that the cloud of dust and smoke which obstructed his view to the south [made by a train which had just passed] would be scattered and dissipated in a few moments." In the instant case we cannot say that plaintiff was bound to assume that the conditions interfering with sight and sound would speedily disappear. The jury would have been warranted in concluding even that the smoky condition did not proceed entirely from the standing yard engine, and that noise was more or less incident to the general situation.

The judgment of the District Court should be affirmed.

Digitized by Google

(249 Fed. 476)

FARLEY v. CAREY SHOW PRINT CO., Inc.

(Circuit Court of Appeals, Second Circuit. February 13, 1918.)

No. 128.

1. COURTS ⟹366(13)—PRECEDENTS—STATE DECISIONS.
The decision of the highest state court, construing local limitation statutes as to actions for wrongful death, though contrary to previous decisions of inferior courts, is binding on the federal courts.

2. APPEAL AND ERROR ⟹257—REVIEW—EXCEPTIONS—NECESSITY.
Where no exception was taken to the dismissal of the complaint, an appellate court need not consider the matter on plaintiff's writ of error.

In Error to the District Court of the United States for the Southern District of New York.

Action by Annie Farley, as administratrix, etc., against the Carey Show Print Company, Incorporated. There was a judgment for defendant, dismissing the complaint, and plaintiff brings error. Affirmed.

Pierre M. Brown, of New York City, for plaintiff in error.

E. Clyde Sherwood, of New York City, for defendant in error.

Before WARD, ROGERS, and HOUGH, Circuit Judges.

PER CURIAM. The action is to recover damages for the death of plaintiff's decedent, as authorized by section 1902, Code Civ. Proc. N. Y., which declares that it "must be commenced within two years after decedent's death." Within the time thus limited, suit was brought in the Supreme Court of New York, complaint was dismissed, but not on the merits, the dismissal affirmed, and leave to go to the Court of Appeals denied, without opinions. 173 App. Div. 936, 973, 158 N. Y. Supp. 1115. Thereafter and within one year from such affirmance, this action was begun.

[1] The causes of action being identical, defendant pleaded the bar of the statute. Plaintiff urged that section 405 of the Code enlarged the period of suit for a year after conclusion of the unsuccessful state court proceedings, put in all her fact evidence, and rested. Motion to dismiss was then granted. Before Sharrow v. Inland Lines, 214 N. Y. 101, 108 N. E. 217, L. R. A. 1915E, 1192, Ann. Cas. 1916D, 1236, it had usually been regarded as settled in this state that the right of action for death by wrongful act expired at the end of two years, that suit within such period was a prerequisite to any action, and that therefore the statutory provisions regarding limitations of actions (of which section 405 is one) did not apply. But the question had not been plainly put to the Court of Appeals before the cited case, and that decision refused to adopt a long line of rulings in the lower courts.

The point being one of construing a state statute creating a cause of action, the courts of the United States must follow the ruling of the highest state court. This is not a case where the supreme judicial authority of the statute-making power has reversed its own considered earlier judgments, to the detriment of contractual right presumably

⟹For other cases see same topic & KEY-NUMBER in all Key-Numbered Digests & Indexes

Digitized by Google

resting thereon or secured thereby (Muhlker v. New York, etc., R. R., 197 U. S. 544, 25 Sup. Ct. 522, 49 L. Ed. 872), nor indeed has any earlier decision been overruled (Dernberger v. R. R. Co., 243 Fed. 21, 155 C. C. A. 551); for we must assume the same result would have been reached if any of the lower court cases had been taken far enough.

[2] Therefore plaintiff's right to sue was saved by section 405, but, as no negligence or wrongful act by defendant or any one else was shown, the dismissal was right. We no more consider it necessary to review the evidence than did the trial and appellate state courts, which heard what ought to have been, and was so far as we know, the same story. Indeed, we could properly decline even to consider the matter, as no exception was taken to the action of the court in dismissing the complaint (Reader v. Haggin, 160 Fed. 909, 88 C. C. A. 91), but the importance of recognizing the effect of the Sharrow Case on future and similar litigation in this circuit has justified this memorandum.

Judgment affirmed.

(249 Fed. 477)

PAINE v. CUMBERLAND TELEPHONE & TELEGRAPH CO.

(Circuit Court of Appeals, Fifth Circuit. March 23, 1918.)

No. 3100.

ELECTRICITY ⟹19(3)—PRESUMPTIONS—RES IPSA LOQUITUR.

In an action against a telephone company for damages for the burning of plaintiff's property in which the company's wires were located, the rule of ipsa loquitur does not relieve plaintiff from the burden of showing negligence.

In Error to the District Court of the United States for the Eastern District of Louisiana; Rufus E. Foster, Judge.

Action by Ruffin B. Paine against the Cumberland Telephone & Telegraph Company. There was judgment for defendant, and plaintiff brings error. Affirmed.

W. O. Hart, of New Orleans, La., and B. M. Miller, of Covington, La., for plaintiff in error.

Jas. C. Henriques, of New Orleans, La., for defendant in error.

Before PARDEE, WALKER, and BATTS, Circuit Judges.

PER CURIAM. This is a suit charging the Cumberland Telephone & Telegraph Company with specific acts of negligence in connection with the burning of the property of plaintiff in error in which the wires of the Telephone Company were located. After hearing witnesses, the trial court directed a verdict in favor of the defendant.

The case is brought to this court upon two assignments of error, to wit:

"I. That this court committed an error in refusing to admit testimony as to previous fires in the telephone exchange of the defendant in the town of Covington, as set forth in bill of exceptions No. 1.

"II. That the court erred in directing a verdict in this case on motion of

---

⟹For other cases see same topic & KEY-NUMBER in all Key-Numbered Digests & Indexes

Digitized by Google

the defendant after plaintiff had rested his case, but, on the contrary, should have ordered the trial to proceed, the whole as set forth in bill of exceptions No. 2."

After hearing the arguments and examining the record, we conclude that neither assignment is well taken. The evidence rejected by the court was not admissible under the pleadings, and the evidence offered wholly failed to sustain the charges of negligence set forth in the petition. The rule of res ipsa loquitur does not relieve the plaintiff in error from the burden of showing negligence. See Patten v. T. & P. R. Co., 179 U. S. 658, 21 Sup. Ct. 275, 45 L. Ed. 361, and Sweeney v. Erving, 228 U. S. 233, 33 Sup. Ct. 416, 57 L. Ed. 815, Ann. Cas. 1914D, 905.

The judgment of the District Court is affirmed.

(249 Fed. 478)

BAYLEY & SONS, Inc., v. STANDART ART GLASS CO. et al.

(Circuit Court of Appeals, Second Circuit. January 16, 1918.)

No. 166.

1. PATENTS ⟹15—VALIDITY—DOUBLE PATENTING.
   Where an inventor at the same time devises a container for electric lights of pleasing design and a mechanical contrivance conveniently united with an æsthetic cover, he has made two inventions, and, though he at first secures only a mechanical patent, he may within the two-year period procure a design patent, without violating the rule against double patenting.
2. PATENTS ⟹15—DESIGN PATENTS—CONSIDERATION.
   A design patent for an ornamental electric light fixture must be viewed in its entirety; its effect being optical.
3. PATENTS ⟹328—VALIDITY—ANTICIPATION.
   Design patent, No. 49,593, for an ornamental electric lighting fixture, comprising a bell-shaped canopy having a straight lower edge, below which is suspended in close proximity a hemispherical bowl, having a straight upper edge, *held* invalid for lack of invention.

Appeal from the District Court of the United States for the Southern District of New York.

Bill by Bayley & Sons, Incorporated, against the Standart Art Glass Company and another. From a decree for complainant, defendants appeal. Reversed and remanded, with directions to dismiss the bill.

The action is upon design patent 49,593, applied for March 25, and issued September 5, 1916. The specification is for an "ornamental electric lighting fixture," comprising a "bell-shaped canopy having a straight lower edge," below which is suspended in close proximity "a hemispherical bowl having a straight upper edge." The claim is for the fixture "substantially as shown and described." The drawing adds nothing to the above description, except that it shows the "canopy" as having six equidistant ribs, which (for all that is disclosed) might be either integral with the material of the fixture, or functionally a skeleton or framing into which the material is inserted or built. On October 12, 1915, the same patentee obtained a mechanical patent (1,156,454) for an "improvement in electric lighting fixtures," claiming such fixture "having a shade and a dish; the shade being formed of a plurality of panels formed of glass" secured together by ribs, with top and bottom binding chan-

---

⟹For other cases see same topic & KEY-NUMBER in all Key-Numbered Digests & Indexes

Digitized by Google

nels, each of them being "a flat ring with inclined walls," in conjunction with "means for securing the ribs to the channels and for connecting the dish to the shade."

The evidence shows that plaintiff called this fixture the "Equalite," and sold it with success; witnesses testifying that the "light * * * was pleasing to the æsthetic emotions [and] it acquired distinctiveness and individuality among the trade." Comparing the drawing of the mechanical patent, as explained in its specification, with the drawing of the patent in suit, it is plain that both draftsmen had before them a single device, that the ribs of both drawings are the same, that said ribs have a mechanical purpose, and, in short, that the design patented is the contour shown in vertical section of the "shade and dish" of the mechanical improvement, though for design purposes the words "canopy and hemispherical bowl" are substituted.

The trial court found infringement, but denied an accounting, for reasons here immaterial. A final decree having therefore issued, defendant took this appeal.

John L. Lotsch and Isaac Steinhaus, both of New York City, for appellants.

Lester F. Dittenhoefer, of New York City (Dodson & Roe, of New York City, of counsel), for appellee.

Before WARD, ROGERS, and HOUGH, Circuit Judges.

HOUGH, Circuit Judge (after stating the facts as above). Error is alleged in that the patent in suit was not held anticipated by the earlier grant to the same patentee for a mechanical improvement.

[1] If the same man at the same time devises a container of pleasing design and a mechanical contrivance conveniently united with the æsthetic covering, he has made two inventions; and, though he patents one, that is no reason why within the statutory two years he may not patent the other. Such act would not be necessarily a case of double patenting, which is always unlawful. The question is unaffected by the accident that one of the two compared patents is for a design and the other for a mechanical arrangement of matter; and it is always the same, viz.: Is the same thing or inventive thought disclosed by both? Williams, etc., Co. v. Neverslip, etc., Co. (C. C.) 136 Fed. 210; President, etc., Co. v. Macwilliam (D. C.) 233 Fed. 439.

The "shade and dish" of the mechanical patent were shown as of the design shape but that shape was neither part of the invention nor essential to its operation or success; whatever merit that improvement possessed depended on the construction and mechanical interrelation of parts, which might just as well have been conical or polygonal, as bell-shaped or hemispherical. But the design patent covers nothing but the shape and effect thereof upon the eye of the particularly shown form of "canopy and bowl." Therefore there was no double patenting; and, as the later patent was applied for within two years after the earlier, the question whether, regarded as a publication, the first specification left no room for patentable invention in the second, is not before us.

[2, 3] There are, however, other design patents issued to other inventors, relating to the shapes of canopies and bowls for electric lights, and antedating the one in suit, which, in our opinion prevent the discovery of any invention in the patent at bar.

Digitized by Google

It is urged in support of the decree below that the novelty of a design is to be tested as a whole and that invention is persuasively shown by the commercial success of "Equalite." Undoubtedly a design must be viewed in its entirety, its effect is optical, and it can no more be tested piecemeal than can a picture (Dobson v. Dornan, 118 U. S. 10, 6 Sup. Ct. 946, 30 L. Ed. 63); but novelty is not invention, nor can aid be found in the sales of "Equalite." That word covers the light and the fitting thereof, all the material as fastened together; and the evidence wholly fails to show whether success is due to the mechanical excellence of the whole article, or the pleasing shape of its "canopy and bowl," which (as shown above) has no necessary connection with the mechanics of the contrivance. To ascertain whether it required invention to conceive and produce a plainly ribbed bell-shaped canopy proximately surmounting a hemispherical bowl, we have considered the design patents below noted,[1] and applied rules of decision often and lately stated by this court[2].

Finding no invention, it is ordered that the decree appealed from be reversed, and the case remanded, with directions to dismiss the bill, with costs in both courts.

[1] Grant, 45,629; Raymond, 48,082; and Pickhardt, 47,934—left no room for this invention in bell-shaped ribbed canopies with or without hemispherical bowls. The kind of mental operation involved, is well shown by the slightly later applications of the same patentee (49,567 and 49,558) showing canopies of hexagonal and circular horizontal section respectively. There would seem to be no difficulty in patenting one design for every figure of plane geometry.

[2] Baker, etc., Co. v. Cass Co., 220 Fed. 918, 136 C. C. A. 484; Denton v. Fulda, 225 Fed. 537, 140 C. C. A. 521; Strause, etc., Co. v. Crane Co., 235 Fed. 126, 148 C. C. A. 620, and Dietz Co. v. Burr, 243 Fed. 592, 156 C. C. A. 290, with the cases there collated.

Digitized by Google

(249 Fed. 513)

STODART v. MUTUAL FILM CORP. et al.

(Circuit Court of Appeals, Second Circuit. February 13, 1918.)

No. 143.

Appeal from the District Court of the United States for the Southern District of New York.

Bill by Robert Stodart against the Mutual Film Corporation and the American Film Company, Incorporated. From a decree for complainant, defendants appeal. Affirmed.

For opinion below, see 249 Fed. 507.

Elijah N. Zoline, of New York City, and James P. Grier, of Chicago, Ill., for appellants.

Paul N. Turner, of New York City, for appellee.

Before WARD, ROGERS, and HOUGH, Circuit Judges.

PER CURIAM. Decree affirmed.

(249 Fed. 513)

REEVES v. YORK ENGINEERING & SUPPLY CO.*

(Circuit Court of Appeals, Fifth Circuit. March 25, 1918.)

No. 3066.

1. CORPORATIONS ⟹426(9)—OFFICERS—RATIFICATION.

Where the president of a corporation, who had charge of its buying and selling, purchased machinery, and such machinery was installed by the corporation, and part of the price paid in accordance with the terms of the contract, there was a ratification of the president's act, regardless of his authority to purchase the machinery.

2. MECHANICS' LIENS ⟹32—CONSTITUTIONAL LIENS—PERFECTION.

Under Const. Tex. art. 16, § 37, declaring that mechanics, artisans, and materialmen of every class shall have a lien upon the buildings or articles made or repaired by them for the value of their labor done thereon, or material furnished therefor, and that the Legislature shall provide for the speedy and effective enforcement of such liens, a seller of ice and refrigerating machinery, which was complete in itself and could be disconnected without injury from the purchaser's plant as it theretofore existed by unbolting four connections, is entitled to a lien thereon.

3. BANKRUPTCY ⟹192—MECHANICS' LIENS—PERFECTION.

Claimant sold ice and refrigerating machinery to a Texas corporation which became a bankrupt. The machinery was complete in itself and could be disconnected without injury to the bankrupt's plant as it theretofore existed by unbolting four connections. Adjudication in bankruptcy followed less than a month after delivery, and claimant within four months of delivery filed the contract of sale which was in the form of a letter with an acceptance written thereon by the bankrupt. The letter showed that the bankrupt was engaged in manufacturing artificial ice at the place of its address. *Held* that as claimant had a materialman's lien under Const. Tex. art. 16, § 37, and as the requirements of Rev. St. Tex. 1911, arts. 5622–5627, providing for the filing of the contract within four months, are intended merely to give notice to persons other than the purchaser, claimant acquired a lien valid as against the trustee in

⟹For other cases see same topic & KEY-NUMBER in all Key-Numbered Digests & Indexes

*Rehearing denied May 28, 1918.

Digitized by Google

bankruptcy who under Bankr. Act July 1, 1898, c. 541, § 47a, 30 Stat. 557 (Comp. St. 1916, § 9631), took the rights of a lien creditor, for the land on which the machinery was installed could readily be located from the contract.

Walker, Circuit Judge, dissenting.

Appeal from the District Court of the United States for the Eastern District of Texas; Gordon Russell, Judge.

In the matter of the bankruptcy of the Alliance Milling Company. The York Engineering & Supply Company filed proof of claim, alleging a constitutional and statutory lien, and on the same day it filed a petition, setting up the facts of the transaction out of which the claim arose. J. H. Reeves, trustee in bankruptcy, filed a protest, and, the judgment of the referee allowing the claim and lien having been affirmed by the District Court, he appeals. Affirmed.

Cecil H. Smith, of Sherman, Tex. (J. D. Williamson, of Waco, Tex., J. A. L. Wolfe and Head, Dillard, Smith, Maxey & Head, all of Sherman, Tex., and Thompson, Knight, Baker & Harris, of Dallas, Tex., on the brief), for appellant.

N. C. Abbott, of Houston, Tex., for appellee.

Before WALKER and BATTS, Circuit Judges, and FOSTER, District Judge.

BATTS, Circuit Judge. The Alliance Milling Company was adjudged a bankrupt on April 5, 1916. May 23, 1916, the York Engineering & Supply Company, appellee, filed proof of claim in the sum of $2,411.25, alleging a constitutional and statutory lien for material and machinery furnished and placed on the property of the bankrupt; and, on the same day, filed a petition setting up the facts of the transaction out of which the claim arose. The trustee filed a protest. The referee allowed the claim and lien. The trustee excepting, the matter was certified to the United States District Court, where the judgment of the referee was affirmed. The judgment is before this court for review.

On January 15, 1916, the bankrupt entered into a contract with the appellee, by which it agreed to purchase certain ice and refrigerating machinery, as follows: Eleven sections of Shipley double-pipe flooded ammonia condensers, each section to be 8 pipes high, 18 feet 2 inches long, the condensers to be of 2-inch and 3-inch ammonia pipe, together with the necessary stands and header connections for both water and ammonia; each section to have inlet, outlet, pump-out and purging connections; also one purge drum, 10 by 6 long, with connections; one ammonia receiver, 24 in diameter by 16 long, to be of welded pipe, with all necessary pipe connections; one gauge glass, with automatic ball check valves.

Payments were to be 25 per cent. cash on arrival of material, 25 per cent. cash when material was erected, and 50 per cent. in four months' note, bearing 8 per cent. interest, dated and delivered at the time of the second payment. The bankrupt received the material, and, prior to the adjudication, placed the same in its ice plant by

Digitized by Google

connecting it with its ice machinery then operated by the company. The erection was outside of the old ice plant on a concrete base especially prepared for it, its own weight holding it in place. The machinery was complete in itself and could be disconnected, without injury, from the plant as it had theretofore existed, by unbolting four connections. An employé of the selling company, under the arrangement made at the time of the sale, was sent to see that it was properly erected. The contract was made with J. N. Rayzor, as president of the purchasing corporation. Delivery was made early in March, 1916.

The report of the referee, supporting the claim of the appellee, both as to the amount and the lien, was excepted to, the exceptions presenting the following points: (1) That the president of the bankrupt corporation did not have authority to bind the corporation by a contract and create a mechanic's lien, either upon the condenser or real property of the corporation, by its installation upon the premises; (2) that, having no authority from the board of directors, the president could not create a mechanic's lien as against this property; (3) that, the condenser being a fixture, the trustee's taking possession thereof (he being an attaching creditor under section 47a of the Bankruptcy Act) was not a ratification so as to create a mechanic's lien; (4) that title to the condenser, it being a fixture, passed by sale of all properties of the bankrupt to the purchaser, and no mechanic's lien existed on the condenser as against the purchaser; (5) the property being sold without any contract reservation of title, no contract lien has since been placed upon the property; (6) the mechanics' and materialmen's statutes made no provision for the retention of lien upon the specific machinery, sold without reservation of title; (7) that the property involved was not of a character to become attached to and made a component part of the realty, so as to give rise to any character of lien; (8) that claimant sold the property pursuant to a written order, and reserved no title, and the property was simply set into the plant, connected with other machinery by removable connections, and its character is such that it constitutes no integral part of the realty, nor such a fixture or addition thereto or improvement thereon as gives rise to a lien under the statutes.

Upon judgment by the District Court in favor of claimants, assignments of error were made to a like effect.

Section 37, art. 16, of the Constitution of Texas, provides:

"Mechanics, artisans and materialmen of every class, shall have a lien upon the buildings and articles made or repaired by them, for the value of their labor done thereon, or material furnished therefor; and the Legislature shall provide by law for the speedy and efficient enforcement of said liens."

Article 5621 of the statutes of Texas provides:

"Any person, or firm, lumber dealer, or corporation, artisan, laborer, mechanic, or sub-contractor, who may labor or furnish material, * * * fixtures or tools to erect any house or improvement, or to repair any building or improvement whatever, * * * upon complying with the provisions of this chapter, shall have a lien on such house, building, fixtures, improvements * * * and shall also have a lien on the lot or lots of land necessarily connected therewith, to secure payment for the labor done, lumber, material, machinery or fixtures * * * furnished for construction or repair."

Digitized by Google

Article 5622:

"In order to fix and secure the lien herein provided for, it shall be the duty of every original contractor, within four months * * * to file his, * * * contract in the office of the county clerk of the county in which such property is situated, and cause the same to be recorded in a book to be kept * * * for that purpose. * * *"

Article 5623 is with reference to persons furnishing material, etc., to any contractor.

Article 5624 makes provision for the filing and recording of a sworn account, when there is no written contract, and a form of affidavit is given which provides for a description of the improvement and of the lot or tract of land upon which it is placed. It concludes with a proviso to the effect that "a substantial compliance with the above form shall be deemed sufficient to fix and secure the lien."

Article 5626 provides:

"In case the contract is filed and recorded as provided for in article 5527 [5622], a like description of the house, building or improvement, and the lot or tract of land shall accompany the same, as is required in the foregoing forms, except that the same is not required to be under oath."

On the 24th of April, 1916, the York Engineering & Supply Company filed for record the contract between that company and the bankrupt in the form of a letter, dated January 15, 1916, submitting a proposition, and an acceptance in writing of the same date by the "Alliance Milling Company, per J. N. Rayzor, president."

[1] The primary question presented is whether Rayzor, the president of the corporation, could, by his act in buying the property, create a lien upon the thing bought and the realty of the corporation. Rayzor was president of the corporation, and had charge of its buying and selling, and the purchase was made by him. The machinery was installed by the company, and a part of the purchase price was paid by it in accordance with the terms of the contract. Whether or not the president primarily had authority to make the purchase, that which followed constituted a ratification.

If he had not the authority, and if there had been no ratification, the property belongs to appellee. If he had the authority to make the purchase, the legal consequences which follow from such a purchase resulted.

Appellant claims that a lien under the Texas law, on this character of property, is acquired only through: (a) A chattel mortgage; (b) a reservation of title in the sale contract; (c) a mechanic's lien under the Constitution; (d) a mechanic's lien under the statutes. He insists properly that no chattel mortgage was taken, and that there was no reservation of title. His contention that the facts do not bring the claim under the constitutional provision, and that the claimants have failed to comply with the statutory requirements, presents the points to be determined.

[2] The courts of Texas hold that a lien is created by the Constitution of the state in favor of "materialmen of every class" upon "the buildings and articles made or repaired," for "material furnished therefor." The existence of this lien is not dependent upon any action taken under the terms of the statute. Bassett v. Mills, 89 Tex. 167,

Digitized by Google

34 S. W. 93; Strang v. Pray, 89 Tex. 525, 35 S. W. 1054; National Bank v. Taylor, 91 Tex. 78, 40 S. W. 876, 966; De Bruin v. Land & Irrigation Co. (Tex. Civ. App.) 194 S. W. 655. If the terms of the Constitution are applicable to the instant case, all the objections of appellant are lacking in merit.

"This provision (of the Constitution)," says the court in Bassett v. Mills, supra, "in so far as it gives a lien, is as broad as language can make it." In Strang v. Pray, supra, the Supreme Court of Texas uses this language:

> "It was the intention of the members of the convention which framed and adopted this section of the Constitution to give full and ample security to all mechanics, artisans, and materialmen for labor performed and material furnished for the erection of all buildings and other improvements, and the courts must give such construction to this language as will carry out that intention."

From this language and the decisions examined, it is apparent that the Texas courts give a liberal construction to the provision of the Constitution, in an effort to give effect to its manifest intent. It would have been difficult for the Constitution makers to have used a more comprehensive word than "material," and protection is given "materialmen of every class." The words "buildings and articles made or repaired" are also very comprehensive.

It is contended that, if it should be held that a lien exists in this case, it would be necessary to make a like holding in every instance where machinery was sold by a manufacturer to a dealer, or by a dealer to an individual. Neither proposition is sound. It is easily to be conceived that a lien would follow a sale in one case, when the sale would not have that effect in another. The usual effect of a sale of a piece of machinery is the same as the ordinary effect of the sale of lumber or other material that goes into the construction of a house. If the sale is in the course of business, and without reference to any particular improvement, no lien results, unless it is specifically retained. If, however, the material is sold with regard to the making of a certain improvement, no reason is seen why the constitutional rule should not apply. It is not always the case when gas fixtures are sold, or a cooking range is sold, or engines and boilers are sold, that a lien upon the property so sold, or upon any other property on which it is to be placed, results. But if the material is bought with the purpose of incorporating it into a building or improvements, the terms of the Constitution would seem to apply. The Constitution gives the lien to "materialmen of every class." The lien is given "upon the buildings and articles made or repaired." The language is broad and the purpose is clear. There is nothing to indicate that merely raw material is intended to be included within its terms. Certainly, some classes of manufactured products would always be so included. For instance, no one would think of undertaking to maintain that nails and screws, locks, doors, and windows were not within the terms of the Constitution. No reason is made sufficiently to appear why such machinery as was furnished in the instant case, capable of incorporation into and made a part of the plant and furnished for that purpose, should not be held to be included.

Digitized by Google

As was suggested in Banner Iron Works v. Ætna Iron Works, 143 Mo. App. 1, 122 S. W. 764:

"In the case of machinery or other articles furnished to a factory or place of business, an important circumstance, in the attempt to ascertain the intention of the proprietor, is the adaptability of the article or machine to the work or business of the place. Thomas v. Davis, 76 Mo. 72, 43 Am. Rep. 756. If the thing furnished was necessary to that work or business, or necessary to the purpose for which the building was designed and used, or was a convenient accessory, or commonly employed in connection with such business, the intention of the proprietor of the establishment to annex it permanently to the realty may be inferred."

It is clear that the condenser was sold and purchased with the view of its being made a part of a particular plant. The purchaser was conducting the business of manufacturing ice. The proposition made by the letter of the claimant, and which was accepted by the ice manufacturing company, described the sections of the condenser to be furnished, indicated their length and included the necessary stands and header connections; also the inlet, outlet, pump-out, and purging connections. It also provided for connections to a purge drum. The ammonia receiver was to have the necessary pipe connections. A provision was to the effect:

"It is understood that the purchaser will furnish the necessary pipe connections between the compresser and condenser, and between the receiver and freezing system. We are also allowed to use part of the present header fittings, provided they are of proper size."

It is apparent reference was made to a system already installed, to which the condenser, etc., described in the letter was to be attached. The understanding between the seller and the buyer, to the effect that the representative of the former should see to the installation, is also evidence of this fact; and, finally, the proof that a base was made upon which the condenser was set identifies the machinery sold with the improvement contemplated at the time of the sale, and which was in part to have been paid for "when material is erected."

Appellant cites authorities to the effect that machinery of the character in question is not of the kind to which the materialmen's liens apply. An examination discloses no conflict with the views expressed. Among the cases cited is Rose v. Persse, 29 Conn. 257, where gas fixtures were held not to be subject to the lien; the court, however, holding that the materials were not furnished in pursuance of any contract for the erection of any building, but by virtue of a mere contract of sale and purchase. In Boston Furniture Co. v. Dimock, 158 Mass. 552, 33 N. E. 647, it was held that portable cooking ranges, with zinc to place them on, and pipes for connection, are not such parts of the building as to entitle the seller to mechanic's lien; the court holding that the true test is structural connection with the building.

In Collins v. Mott, 45 Mo. 100, the court held that the term "improvement," as used in the Missouri act, is synonymous with building, and did not include engines and boilers, stating that:

"No terms are used which include such engine, etc., unless they have become part of the realty, when the lien, of course, would cover them."

Digitized by Google

In Haslett v. Gillespie, 95 Pa. 371, it was held that where new machinery is furnished for and placed in the old mill, the party supplying the same is not entitled to a mechanic's lien against the building. The court held that the building was neither repaired, altered, nor enlarged; the machinery being a bolt header and a screw cutter, so placed as to be operated by belting already in use.

In Thompson v. Smith, 67 N. H. 409, 29 Atl. 405, 68 Am. St. Rep. 679, it was held that a portable steam engine used in a factory could not be made the basis of the claim of a mechanic's lien.

These cases are consistent with the position taken. Many authorities could be cited showing the comprehensive meaning given the word "material," among them Grand Island Bank v. Koehler, 57 Neb. 649, 78 N. W. 265; Selden v. Meeks, 17 Cal. 128; Parker L. & I. Co. v. Reddick, 18 Ind. App. 616, 47 N. E. 848.

[3] The statute is somewhat more comprehensive than the Constitution. To "fix" the lien of the statute, it is required, where a contract is in writing, that it be filed in the office of the county clerk. The building and lot upon which it is sought to fix a lien may be described by a statement to be filed, which need not be sworn to. The statute merely requires "a substantial compliance" with the terms of the article providing for the description. A reasonable construction would be that if the purpose of the law is accomplished, and the owner and persons dealing with him are given the protection to which they are entitled, the law will be held to have been complied with.

The only objection made to the manner of compliance by appellee with the statute was that a statement describing the building and lot was not filed. This objection was not made in the original objections of the appellee before the master, nor in the objections to the master's report, unless included under some generalization.

It could very well be argued, in view of the purpose of the statement, and the provision requiring only substantial compliance, that the contract itself gave sufficient notice of the property to be affected by the lien. The letter constituting the contract was addressed to "Alliance Milling Co., Denton, Tex." At that place the Alliance Milling Company had an ice plant. It was provided that the purchaser would furnish pipe connection "between the compresser and condenser, and between the receiver and freezing system." The sellers were allowed to use part of the "present header fittings." At a number of places "connections" were provided for. The character of the machinery was identified by reference to the manufacture of ice.

As hereafter indicated, if the lien is one provided for by the Constitution, no action under the terms of the statute is necessary for its creation; as to such liens, all that could be provided for by the statute would be the enforcement of the remedy and the protection of the owner of the land and improvement and subsequent lien creditors and mortgagees. At the time of the adjudication of the bankrupt, the trustee took the property under the terms of the statute as if he had been a lien creditor. Section 47a of the Bankruptcy Act. At that time, however, the four months in which, even under the terms of the statute, a materialman might fix his lien had not elapsed. Under the

Digitized by Google

Constitution the appellee had its lien, and the trustee took subject to the lien. Before the expiration of the four months, the contract between the York Company and the bankrupt was filed, and all of the facts connected with the purchase, delivery, and installation were brought to the knowledge of the trustee. In the case of F. & M. National Bank v. Taylor, 91 Tex. 78, 40 S. W. 876, 966, the Supreme Court adopts the opinion of the Court of Civil Appeals, in which this language is used:

"The bank cannot insist in this case upon any of the principles of estoppel, for it took the note and mortgage and furnished the money on April 3, 1894, while Taylor was actually at work on the building, and must be held therefore to have legal and full notice of his mechanic's lien and the amount of his debt, and every other fact which inquiry of Taylor would have elicited. At that time Taylor unquestionably had a mechanic's lien, and the taking of the notes and mortgage afterwards presents no principle of estoppel, even if such a defense had been pleaded."

Construing the facts of that case, in connection with the opinion, the court in De Bruin v. Land & Irrigation Co. (Tex. Civ. App.) 194 S. W. 655, said:

"Undoubtedly, as between the persons named in the Constitution and the owner of the property, the lien is fixed by the Constitution. * * * In the case of National Bank v. Taylor, 91 Tex. 78 [40 S. W. 876, 966], it was held that, as between the owner and the contractor, the Constitution fixed the lien, without any notice, or filing of claim, or any other act on the part of the contractor; but, so far as innocent subsequent purchasers or mortgagees and lienholders are concerned, the statute must be complied with, in order to fix the lien. It was held, however, that actual notice of the lien would be sufficient, without recorded notice; and that, where a subsequent lienholder knew that the contractor was at work on the premises when he loaned the money and took his mortgage, he would be charged with notice. * * * We deduce from the different decisions of this state that the Constitution gives a lien to the persons named thereon, and that, as between the owner of premises on which labor is performed, or for which material is furnished, and those persons, the lien arises and may be enforced without the aid of the statute; but, as to third parties who have not actual notice of the labor having been performed or the material furnished, the lien is not enforceable unless the statute has been complied with."

The only objection which can be made to the manner in which appellee complied with the statute is a claim that he failed to file a statement showing the lot upon which the improvements were placed. The contract which was signed by the Milling Company, and which indicated that the condenser was to be placed with the ice-making machinery already installed, was recorded. At the time the trustee took possession of the property, the lien had attached under the terms of the Constitution, and no person had become a mortgagee of the ice company, or a creditor of the company, with rights arising out of a failure to record an instrument creating a lien. The status of the York Company as a creditor secured by a lien was not changed by the appointment of the trustee. After the appointment, for the balance of the four months succeeding the accrual of the debt, the York Company had the right to comply with the statute, and thereby give notice to all persons who might otherwise part with value to the bankrupt or become a creditor of a class entitled to peculiar consideration. The only purpose of such a compliance with the statute by the recording of the

Digitized by Google

contract and the statement with regard to the building and land involved would have been to give notice. This end could be just as effectually accomplished by actual notice as by filing the contract. Even in those cases in which, under the terms of the Texas statute, a mortgage of land or personal property is void as to innocent purchasers for value or lien creditors, the protection is not extended where actual notice of the prior unrecorded instrument exists. Whatever peculiar standing the trustee may have is by virtue of the terms of the Bankruptcy Act. He has exactly the same standing as an attaching or other lien creditor, and no more. If such a creditor, there being no bankruptcy proceedings, had on the 5th day of April, 1916 (the day on which the adjudication was had), acquired his lien, it would have been a lien subject to be defeated, either by the record of the contract in accordance with article 5627, or by the materialman's giving actual notice of his lien. Constructive notice could have no greater dignity, either as to the lien creditor or the trustee, than actual notice. It is to be kept in mind that the constitutional lien is not created by compliance with the articles of the statute cited, and that all that could have been done by compliance with the statute would have been to give notice.

The conclusion which has been reached accords with abstract equity. But for the sale and installation a few days before the bankruptcy, the trustee would have had no estate to administer, except the plant as it existed prior to the purchase from appellee. This addition to its value was made at the expense of the claimant. The property was not paid for, and no other creditor can reasonably or equitably complain if the property sold is first subjected to the lien of the unpaid seller.

The property has been in the possession of and used by appellant since the sale. The court below may find it necessary to modify the judgment to meet the resulting conditions. With this saving the judgment is affirmed.

WALKER, Circuit Judge (dissenting). In the opinion of the writer the allegations of the petition asserting the claim made by the appellee and the evidence offered in support of those allegations do not show the existence of a state of facts giving rise to the lien provided for by the section of the Constitution of Texas which is set out in the foregoing opinion. That section provides for mechanics, artisans, and materialmen having a lien upon "the buildings and articles made or repaired by them for the value of their labor done thereon, or material furnished therefor." The subject of the lien given by that section is "the buildings and articles made or repaired by" a mechanic, artisan or materialman. It is not made to appear that that upon which a lien was claimed and allowed was a building or article made or repaired by the appellee. So far as the writer is advised, no authoritative ruling has been made which indicates that the liberality of construction which has been applied in giving effect to that provision goes so far as to make it permissible to accord to that provision the effect of giving a lien to a materialman not having the relation to the subject of the claimed lien which that provision requires to exist to entitle him to a lien. It seems to the writer that the statute must be relied upon as support for the claim made. If either of the quoted statutory provisions

Digitized by Google

entitled the appellee to acquire a lien, it was incumbent upon it to pursue the applicable method which the statute requires to be observed to fix a lien. Keating Implement & Machine Co. v. Marshall Electric Light & Power Co., 74 Tex. 605, 12 S. W. 489; Berry v. McAdams, 93 Tex. 431, 55 S. W. 1112.

The written contract between the appellee and the bankrupt was filed and recorded pursuant to the provision of the above-quoted article 5622. The contract as filed and recorded was not accompanied by the description of any house, building, or improvement, or of any lot or tract of land, pursuant to the provision of article 5626 of the Texas statutes. What was put on record did not give any information as to the location of the machinery on which a lien was claimed. It disclosed only the sale of itemized parts or pieces of machinery f. o. b. York, Pa., at a stated price, part of which was payable in cash on arrival of the material, and the balance in two installments payable thereafter.

An obvious purpose of such provisions as the one last mentioned is to enable any one having dealings with reference to property which may be subjected to liens to acquire from a public record definite information of the presence or absence of a statutory lien on that property. The record of a written contract for the furnishing of specified machinery or material, unaccompanied by a description of the structure in which the machinery or material was installed or used or a statement of the location of that structure, hardly could be regarded as a disclosure of such information. The above-quoted article 5626 evidences a legislative determination of what is required for the identification of the property on which a lien is sought to be established. What the appellee filed for record did not furnish that identification. It cannot be said that one searching the record could have learned therefrom that the appellee was claiming a lien on the particular property on which a lien in its favor was adjudged by the decree under review. The failure to have the recorded contract accompanied by a statement of the data mentioned in article 5626 was a failure to comply with a requirement which is made a prerequisite to the acquisition of the lien claimed. Whitney-Central Trust & Savings Bank v. Luck, 231 Fed. 431, 145 C. C. A. 425. The conclusion of the writer is that because of that failure or omission the appellee was not entitled to the lien it claimed.

(249 Fed. 522)

WILLIAMSON & BROWN LAND & LUMBER CO. v. MULLINS LUMBER CO.

(Circuit Court of Appeals, Fourth Circuit. January 29, 1918.)

No. 1545.

1. TRESPASS ⟹20(3)—ACTIONS—EVIDENCE.

In an action for the cutting and removal of timber from land of which plaintiff is the legal owner, plaintiff may prove title prima facie by showing exclusive possession not obtained by disseisin of defendant.

⟹For other cases see same topic & KEY-NUMBER in all Key-Numbered Digests & Indexes

Digitized by Google

2. ADVERSE POSSESSION ⟹43(4)—DURATION OF POSSESSION—CONSTRUCTION OF STATUTE.

Under the law of South Carolina, which requires continuous possession of land for 10 years by one occupant or his heir or agent to give title by adverse possession, the possession of a grantee under a deed which, although by reason of technical defects it does not convey a legal title, conveys the equitable title cannot be tacked to the possession of the grantor.

3. ADVERSE POSSESSION ⟹112—PERSONS ENTITLED TO CLAIM BY PRESCRIPTION.

Under the law of South Carolina, as settled by decision, that exclusive adverse possession by successive occupants of land in privity with each other for 20 years raises a presumption of a grant at the beginning of the period, the presumption continues in favor of subsequent occupants, and it is not necessary that one who succeeded to the possession after the expiration of the first 20 years should show a perfect chain of legal conveyances from his predecessor, who was in possession at that time, although he takes subject to any conveyance or lien given or created by any preceding possessor under whom he claims and of which he had notice.

4. MORTGAGES ⟹534—FORECLOSURE SALE—RIGHTS ACQUIRED BY PURCHASER.

A purchaser at a foreclosure sale under a mortgage, in a suit to which a grantee of the mortgagor was not made a party, does not obtain a legal title, but only an equitable assignment of the mortgage, nor has he the rights of a mortgagee in possession, unless he takes possession before the lien expires by limitation.

Connor, District Judge, dissenting.

In Error to the District Court of the United States for the Eastern District of South Carolina, at Florence; Henry A. Middleton Smith, Judge.

Action at law by the Williamson & Brown Land & Lumber Company against the Mullins Lumber Company. Judgment for defendant, and plaintiff brings error. Reversed.

Henry E. Davis and F. L. Willcox, both of Florence, S. C. (Willcox & Willcox, of Florence, S. C., on the brief), for plaintiff in error.

W. F. Stevenson, of Cheraw, S. C., and James W. Johnson, of Marion, S. C., for defendant in error.

Before KNAPP and WOODS, Circuit Judges, and CONNOR, District Judge.

WOODS, Circuit Judge. The only question before us is whether the District Judge was in error in granting an involuntary nonsuit at the close of the plaintiff's evidence. The complaint alleges that the plaintiff was the owner and entitled to possession of the land in dispute, and that in 1913 "the defendant, well knowing that the plaintiff had acquired the ownership of the property in question and was entitled to the possession thereof, willfully and wantonly entered upon the tract of land and cut and removed the timber from 391 acres thereof," to the damage of the plaintiff $15,000. The defenses involved were: First, a general denial; and, second, possession of the defendant under paramount title.

⟹For other cases see same topic & KEY-NUMBER in all Key-Numbered Digests & Indexes

Digitized by Google

The plaintiff introduced the following documentary evidence: Deed from C. W. Elliott to Butters Lumber Company, dated June 29, 1896, recorded August 26, 1897; deed from Butters Lumber Company to Cape Fear Lumber Company, dated December 4, 1899, entered on the records of Horry county January 17, 1900, ineffectual to convey the legal title, because it had no witnesses; deed from Cape Fear Lumber Company to the plaintiff, Williamson & Brown Land & Lumber Company, October 28, 1907, entered on the records of Horry county March 6, 1908, also ineffectual to convey the legal title, because it had no witnesses. This deed was re-executed by an instrument duly witnessed on September 13, 1910, recorded September 20, 1910. To show that the defendant also claimed under C. W. Elliott, the plaintiff introduced a mortgage of C. W. Elliott to Armon G. Strickland dated October 31, 1891, recorded January, 1893; judgment record of the foreclosure in an action commenced in 1910; deed from W. L. Bryan, clerk of the court, under the foreclosure, to Chas. K. Gerrald, dated May 1, 1911, recorded May 1, 1911; deed from C. K. Gerrald to Mullins Lumber Company, dated August 25, 1911, recorded September 5, 1911. The Butters Lumber Company, to whom Elliott had conveyed before the foreclosure, was not made a party to the foreclosure suit. As evidence of title by possession, the plaintiff also introduced testimony tending to show that Elliott had been in possession of the land for about 30 years before his conveyance to the Butters Lumber Company, and that the Butters Lumber Company, Cape Fear Lumber Company, and the Williamson & Brown Land & Lumber Company had successively held possession from the date of the conveyance to the Butters Lumber Company to the commencement of this action.

[1] The action is not to recover the possession of the land from the defendant, for it was not alleged that the defendant was in possession. It is not an action for the mere invasion of the plaintiff's possession by the defendant as a trespasser, for there was no allegation that the plaintiff was in actual possession at the time of the alleged trespass. The cause of action, therefore, presented by the plaintiff, was a cutting and appropriation of timber by the defendant as trespasser, and its liability to the plaintiff as owner of the legal title. This put the title in issue. Nevertheless, the plaintiff would have proved a good title prima facie by showing on the trial its own exclusive possession, not obtained by disseisin of the defendant. The law is thus stated in Beaufort Land & Investment Co. v. New River Lumber Co., 86 S. C. 358, 68 S. E. 637, 30 L. R. A. (N. S.) 243:

> "As we have seen, possession not obtained by a tortious act is prima facie evidence of title, and upon this the plaintiff may rest until the defendant justifies his invasion of the possession by proving either title in himself or a license to enter from the true owner. We conclude, therefore, that, if the plaintiff held possession of the land, not acquired by the disseisin of the defendant, it was entitled to hold the land, and to recover of the defendant damages for invasion of its possession, and for the cutting of timber, unless the defendant proved title in itself, or a license from one proved to be the true owner, and that the court was in error in charging otherwise."

See Cathcart v. Matthews, 91 S. C. 464, 74 S. E. 985, Ann. Cas. 1914A, 36.

Digitized by Google

When a plaintiff puts his title in issue, this presumption of title from possession against the defendant as a trespasser may be overcome by proof offered in the course of the trial, either by the plaintiff or defendant. Here the plaintiff, not content to rest on its evidence of possession and of defendant's trespass on that possession, undertook to show that it had obtained a good legal title: First, under the statute of limitations by adverse possession of one of its predecessors in title for 10 years; and, second, by presumption of a grant from the state or the true owner by adverse possession of successive occupants in privity with the plaintiff and with each other for the period of 20 years. If the evidence was sufficient to support a reasonable inference of title in the plaintiff, either by a single possession under the statute, or by successive possessions creating the presumption of a grant, the judgment of nonsuit must be reversed.

[2] The rule in South Carolina, differing from that in other jurisdictions, is that title can be acquired under the statute of limitations only by continuous adverse possession for 10 years of one occupant or his heir or agent. Successive trespasses, even when connected by formal deeds, cannot be tacked, to make out the statutory period of 10 years. McLeod v. Rogers, 2 Rich (S. C.) 19; Pegues v. Warley, 14 S. C. 180; Bryan v. Donnelly, 87 S. C. 388, 69 S. E. 840. Under this rule the District Judge was clearly right in holding that the plaintiff had not made out a title in itself by adverse possession. None of the occupants under whom plaintiff claims held continuous adverse possession for 10 years, except Elliott. Elliott's possession for 30 years made a good title in him, which he conveyed to Butters Lumber Company. But the title thus acquired by the Butters Lumber Company under the statute of limitations by virtue of the adverse possession of Elliott, its grantor, could not avail the plaintiff because the paper purporting to be a deed from the Butters Lumber Company to the Cape Fear Lumber Company, which conveyed to the plaintiff, was ineffectual to convey the legal title for lack of witnesses. This break in the chain was fatal to the plaintiff's claim by adverse possession of Elliott, a predecessor in title for 10 years under the statute of limitations.

It is insisted, however, that the Cape Fear Lumber Company, which conveyed to plaintiff, acquired a good title under the statute by adverse possession from December 4, 1899, to September 13, 1910, when it made a valid conveyance of its interest to the plaintiff. This contention rests on the erroneous conception that the possession of the plaintiff was the possession of the Cape Fear Lumber Company up to the day that it executed a valid conveyance to the plaintiff. The execution by the Cape Fear Lumber Company on October 28, 1907, of the paper intended to convey the title and the payment of the purchase money, which it recited, less than 10 years after the beginning of the alleged possession of the Cape Fear Lumber Company, was at least an equitable conveyance at that time, and the possession under it thereafter by the plaintiff was not under the Cape Fear Lumber Company, but adverse to it and all the world. Ellison v. Cathcart, 1 McMullan (S. C.) 5; Bank v. Smyers, 2 Strob. L. R. (S. C.) 24;

Digitized by Google

Watts v. Witt, 39 S. C. 356, 17 S. E. 822; Betts v. Gahagan, 212 Fed. 120, 128 C. C. A. 636.

[3] The next inquiry is whether the evidence of adverse possession for more than 20 years in the aggregate by successive occupants in privity with each other ending with the plaintiff's possession tended to show title in the plaintiff. In South Carolina exclusive adverse possession of successive occupants in privity with each other raises the presumption of a grant from the state or the true owner at the beginning of the period. This rule is not founded on any statute of limitations, but is a rule of law adopted by the courts for the repose of the title of the person in possession. Arthur v. Arthur, 2 Nott & McC. (S. C.) 96; Stockdale v. Young, 3 Strob. 501, note; Lewis v. Pope, 86 S. C. 285, 68 S. E. 680. There was evidence of adverse possession in the successive holders in privity with each other from Elliott to the plaintiff, which, tacked together, made in the aggregate adverse possession for more than 20 years. Against the inference that these possessions would warrant the jury in finding the title in the plaintiff, the defendant submits this argument: The presumption from 20 years' successive possession is that a good conveyance was made at the beginning of the period of 20 years, and not at the end. Trustees v. McCully, 11 Rich. 424; Thompson v. Brannon, 14 S. C. 542; Trustees v. Jennings, 40 S. C. 168, 18 S. E. 257, 891, 42 Am. St. Rep. 854; Metz v. Metz, 48 S. C. 472, 26 S. E. 787. The grant must therefore be presumed to have been made to Elliott, the first holder, who was in possession at the beginning of the period, and not to the plaintiff, who was in possession at the end; since the title is presumed to have been in Elliott at the beginning, the plaintiff cannot recover unless he can show a perfect chain of legal conveyance from Elliott to himself.

The unsoundness of this view and the impossible result to which it would lead are made clear by the attempt to apply it. A. asserts title by successive possessions without legal conveyances of persons in privity with each other and with him. If he proves his own adverse possession for 9 years, the possession of B., under whom he entered, for 9 years, and the possession of C., under whom B. entered for 3 years, he has made out his title by presumption. But under defendant's theory of the law, if A. proves his own possession for 9 years and the possession of B., under whom he entered for 20 years, he fails, because he has proved title by presumption in B., and has not proved that the legal title has passed from B. to him by legal conveyance.

We venture to think, both on principle and authority the law may be thus stated: The successive possessions for 20 years give rise to the presumption of a grant to the first taker at the beginning. Starting with the first taker, the successive adverse possessions may be tacked to make out the full period of 20 years from which a good title is presumed in the last taker against all persons who are strangers in title to the successive possessors in privity with each other claiming the land as their own. This rule, that the possessions of successive holders in privity with each other for 20 years, though without formal deeds of conveyance from one to the other, is sufficient to confer good

Digitized by Google

title on the last holder against all the world, except those who have a superior claim from one of the preceding successive holders, is settled by authority in South Carolina. The exact relationship of privity between the successive holders, whether created by parol gift, sale, or otherwise, is of no concern to the outside world. The purpose of the presumption from lapse of time is to quiet the title of the last holder found in possession after 20 years of connected adverse possession.

This is decided and illustrated in Thomson v. Peake, 7 Rich. (S. C.) 353, where the last holder was held to have good title to the land on proof of successive adverse possessions for 20 years of those in privity with him without proof of successive formal conveyances. 2 Washburn on Real Property, 348. "The lapse of 20 years is sufficient to raise the presumption of a grant from the state, of the satisfaction of a bond, mortgage, or judgment, or of a grant of a franchise or the payment of a legacy, or almost anything else that is necessary to quiet the title of property." Riddlehoover v. Kinard, 1 Hill, Eq. (S. C.) 376; Hutchinson v. Noland, 1 Hill (S. C.) 222; Young v. McNeill, 78 S. C. 143, 155, 59 S. E. 986. It follows that the plaintiff, by its evidence of successive possession of persons in privity of plaintiff and with each other, commencing with Elliott, made a case for submission to the jury of title by presumption for 20 years' consecutive possessions.

[4] But each successive possessor with notice takes subject to any conveyance or lien created by the act of any preceding possessor under whom he claims. This is on the familiar principle that, as one in possession cannot dispute the title of the person under whom he claims, he is bound by the conveyance of the land and liens placed on the land by any such person of which he has notice, either actual or constructive, before the time of his own adverse entry. Applying this principle, Butters Lumber Company and the plaintiff, claiming by successive possessions from it, were bound by the antecedent mortgage placed on the land by Elliott, the first taker from whom they derived title. Hence, if the mortgage had been foreclosed in an action in which the holder of the legal title was a party defendant, and the Mullins Lumber Company had acquired title under the foreclosure, its title would be good against the plaintiff. Under different conditions the principle was discussed and applied in Coleman v. Coleman, 71 S. C. 518, 51 S. E. 250.

But the defendant is not in a position to avail itself of this rule, for the reason that it derived no title from Elliott under the mortgage, and never had any right as assignee of the mortgage to assert against the plaintiff a claim to hold the land as mortgagee in possession. When the suit for foreclosure was commenced in 1910, Elliott had conveyed the land to Butters Lumber Company by deed dated in 1896, recorded in 1897, and the Butters Lumber Company was not made a party to the foreclosure suit. Hence Gerrald, the purchaser at the foreclosure sale, obtained no title to the land, but only an equitable assignment of the mortgage. Givins v. Carroll, 40 S. C. 415, 18 S. E. 1030, 42 Am. St. Rep. 889; Williams v. Washington, 40 S. C. 457, 19 S. E. 1; Brobst v. Brock, 77 U. S. (10 Wall.) 519, 19 L. Ed. 1002; Bryan v. Brasius, 162 U. S. 415, 16 Sup. Ct. 803, 40 L. Ed. 1022. His attempted con-

Digitized by Google

veyance in turn operated as an equitable assignment of the mortgage to the defendant. It follows that the defendant had no title whatever from Elliott, and could assert no right against the plaintiff, based on the theory that it acquired title from a common source.

Nevertheless, if the defendant was a mortgagee holding possession of the land, acquired without force or wrongdoing at the time of the commencement of this action, it would be entitled to hold possession against the plaintiff until payment of the mortgage. Bailey v. Bailey, 41 S. C. 338, 19 S. E. 669, 728, 44 Am. St. Rep. 713; Sims v. Steadman, 62 S. C. 304, 40 S. E. 677; Bryan v. Brasius, 162 U. S. 415, 16 Sup. Ct. 803, 40 L. Ed. 1022. Assuming the possession of the defendant under the claim of assignment of the mortgage at the time this action was commenced, this possession could not avail against the plaintiff as that of a mortgagee in possession, for the reason that at the time of the entry of defendant in 1913 the mortgage had been extinguished as a lien by a lapse of time. Section 3535 of Code of Laws of South Carolina, 1912, provides that no mortgage "shall constitute a lien upon any real estate after the lapse of twenty years from the date of the creation of the same," except upon entry on the record of an acknowledgment, which does not appear here. In Lyles v. Lyles, 71 S. C. 391, 51 S. E. 113, it was held that under this statute the lien of a mortgage is not extinguished until the lapse of 20 years from the maturity of the mortgage debt. The date of the maturity of the debt does not appear in the record, but in the absence of evidence of the date of maturity the rule is that the debt will be considered immediately due. Harrison v. Cammer, 2 McCord (S. C.) 246; Wilks v. Robertson, 3 Rich. (S. C.) 182; 2 Daniel, Neg. Inst. 88; 1 Jones on Mort. 75. It does not help the defendant to assume that a payment of $10 made at the date of the mortgage was payment of interest, indicating that the debt did not mature until October 31, 1892, a year after the date of the mortgage, for the defendant did not enter until 1913, more than 20 years after October 31, 1892.

The conclusion that under the evidence the defendant had no valid claim to possession under Elliott, either as grantee or mortgagee in possession, eliminates all questions of common source of title and the right of a mortgagee in possession, and places the defendant in a position of standing on its alleged possession unconnected with Elliott, the source of the plaintiff's claim.

The last point made by the defendant is that the statute above cited (Civil Code, § 3535) is not available to the plaintiff, because section 147 of the Code of Procedure, relating to the time of the commencement of actions, provides that the time does not run in favor of one who is out of the state. This section obviously has no effect to exclude foreign corporations from the benefit of section 3535 of the Civil Code relating to the extinguishment of liens by lapse of time.

On the record as presented, we conclude that the District Judge erred in ordering an involuntary nonsuit, first, because evidence of possession at the time of the alleged trespass by the defendant was prima facie evidence of title; and, second, because the evidence of possessions of successive holders in privity with the plaintiff and with

Digitized by Google

each other was evidence of a grant to the first holder which inured to the benefit of the plaintiff, the last holder.

Reversed.

CONNOR, District Judge (dissenting). I regret that, after anxious consideration, I find myself unable to concur in the conclusion reached by the court. I concur, without hesitation, in the process of reasoning and the conclusions stated, forcibly and clearly, in the opinion of Judge WOODS, in every respect, save the last proposition.

The title was in Elliott prior to his conveyance to the Butters Lumber Company. His title is founded upon the law of South Carolina, by which, after 20 years' adverse possession, under a claim of right, a presumption arises that a grant was issued by the state, or deed executed by the true owner to the person holding such possession. This presumption is indulged because experience has justified the conclusion, when possession for this period is shown, that a grant or deed has been executed, which has either been lost or destroyed. It has, for its purpose, the security of titles. Ricard v. Williams, 7 Wheat. 109, 5 L. Ed. 398. The principle is clearly stated in Ellen v. Ellen, 16 S. C. 140:

> "Title to land growing out of long-continued possession—long enough to presume a grant, deed or other muniment of title—attaches at the beginning of the possession, in a presumption of law, that a deed was executed at that time which has since been lost."

This rule of law is not peculiar to South Carolina, but obtains, either by decisions of the court, or by legislative enactment in all of the American states—differences being found only in respect to the period of time during which possession is required to raise the presumption. In the light of the evidence in this case, the court takes it, as a fact, that Elliott either had a grant from the state, or a deed from the true owner. He conveyed to the Butters Lumber Company thereby vesting a perfect title in that company. This title may be divested:

(1) By a deed executed in accordance with the statute of South Carolina; it is conceded that no such deed was introduced in evidence.

(2) By an ouster, or disseisin, under color of title, followed by a continuous possession, in the disseisor, for the full period of 10 years; this is not shown.

(3) By possession, without any connection either of possession, or claim by those in possession, for 20 years.

The Butters Lumber Company undertook to convey to the Cape Fear Lumber Company by deed, ineffectual, because not properly executed —January 17, 1900. Assuming that, at that time, the Cape Fear Lumber Company took possession of the land, this action was instituted October 9, 1916; hence 20 years had not expired. If either the Cape Fear Lumber Company or plaintiff had remained in possession for 10 years, the deeds under which they entered, while invalid, and ineffectual to convey title, were color of title, such possession would have ripened into title. It is conceded that neither of these companies were in possession for the statutory period; hence, no title was acquired through this source. It is said:

Digitized by Google

"The successive possession for twenty years gives rise to the presumption of a grant to the first taker at the beginning."

In this I concur. It is further said:

"Starting with the first taker, the successive, adverse possessions may be tacked to make out the full period of 20 years from which a good title is presumed in the last taker to the successive possessors claiming the land as their own."

From this proposition the conclusion is reached that the plaintiff may tack the possession of the Cape Fear Lumber Company and its own possession, admittedly less than 20 years, to the prior possession of the Butters Lumber Company and Elliott, for the purpose of completing the 20 years and raising a presumption of a deed to itself. In this conclusion I am unable to concur. The presumption based upon Elliott's possession for 20 years exhausted its probative force when invoked to show title in him. The title which vested in the Butters Lumber Company is based, not upon a presumption, but upon a valid deed from the owner, Elliott. If a grant from the state to Elliott had been shown, and his deed to the Butters Lumber Company introduced, is it not clear that, upon the plaintiff's evidence, it would fail in this action? The presumption of the existence of a grant or deed is as effectual, for the purpose of vesting title, as if a grant, or deed, had been introduced. If the plaintiff is dependent upon Elliott's possession to raise the presumption that a grant or deed was executed to it, the evidence rebuts the presumption, and shows that the title is in the Butters Lumber Company. In other words, having invoked the presumption to show title in Elliott and having shown that his title vested in the Butters Lumber Company, I am unable to perceive how it may again invoke the same presumption to show title in itself, which is contrary to the truth, as shown by its own evidence.

It is said, and in this I concur, that:

"Possession not obtained by a tortious act is prima facie evidence of title, and upon this the plaintiff may rest until the defendant justifies his invasion of the possession by proving either title in himself, or a license to enter, from the true owner."

This language is quoted from the opinion of the learned judge, who writes the opinion here, when a member of the Supreme Court of South Carolina. The law is stated with his uniform clearness and accuracy. The distinction between the two cases is seen by reference to the facts stated in that case. The judge says:

"The important question is thus raised, whether a plaintiff alleging *both title and possession* (italics mine) is entitled to recover damages upon proof of his possession and the invasion of it by the defendant, without giving proof that he has a perfect title."

This question is answered in the affirmative and sustained by an able, learned discussion, and citation of authority. Beaufort Land & Investment Co. v. New River Lumber Co., 86 S. C. 358, 68 S. E. 637, 30 L. R. A. (N. S.) 243. Here there is no allegation in the complaint that plaintiff was, at any time, in possession; but it is alleged that "the plaintiff was the owner and entitled to the possession of a tract of land," etc., and that "defendant, well knowing that plaintiff was

Digitized by Google

the owner, and entitled to the possession thereof, entered upon and cut and removed timber," etc. The action is not trespass quare clausum fregit, or for the invasion of plaintiff's possession, for manifest reasons. As said in the opinion, the title is in issue. The principle upon which the plaintiff in the case cited recovered cannot aid the plaintiff in this case; to entitle it to recover it must show, at least, prima facie title.

I concur in the opinion that defendant did not acquire title by the purchase at the foreclosure sale. If it acquired the equitable rights of the original mortgagee, they must be asserted and administered in a court of equity. While the plaintiff has not, as I respectfully think, acquired the legal title to the land, and cannot, upon its own showing in this action, recover the value of the timber alleged to have been cut by defendant, it would seem that it has acquired equitable rights, which will be protected and enforced in a court of equity; here its right to recover depends upon its showing that it had the legal title. I cannot think that it may recover of defendant, as it seeks to do, upon the evidence introduced before the District Court, the value of the timber, which was apparently the principal value of the land.

I think that the judgment of nonsuit should be sustained.

(249 Fed. 531)

WHITAKER et al. v. WHITAKER IRON CO. et al. *

(Circuit Court of Appeals, Fourth Circuit. February 5, 1918.)

No. 1551.

1. WILLS ⟹860—TITLE AND RIGHTS OF LEGATEES—STOCKHOLDERS' SUIT—"DEVOLVE."

By his will a testator empowered his executors to convert all his property into cash at any time, except certain stock in a corporation, which they were to hold in trust for the benefit of his wife until her death, when it was to become a part of his residuary estate, which, after payment of special bequests, was to be equally divided between his children or their representatives, taking into account advances made them. *Held*, that the legatees did not by devolution take title to the stock on the death of the wife while it remained in the hands of the executors, who had power to sell the same, and that they could not maintain a stockholders' suit against the corporation and others (quoting Words and Phrases, Devolve).

2. CORPORATIONS ⟹211(6)—STOCKHOLDERS' SUIT—SUFFICIENCY OF BILL.

A bill filed by complainants as stockholders against the corporation and others, considered in the light of the corporate records produced in response to complainants' prayer for discovery, *held* to state no cause of action.

3. CORPORATIONS ⟹209—STOCKHOLDERS' SUIT—LACHES.

Minority stockholders, seeking redress for alleged fraud, must act promptly, and a bill filed at least 12 years after the transactions alleged to have been fraudulent, with no excuse given for the delay, shows such laches on its face as to warrant its dismissal.

Appeal from the District Court of the United States for the Northern District of West Virginia, at Wheeling; Alston G. Dayton, Judge.

⟹For other cases see same topic & KEY-NUMBER in all Key-Numbered Digests & Indexes

*Rehearing denied May 7, 1918.

Digitized by Google

Suit in equity by Martha E. Whitaker, individually and as executrix of the will of Carrie C. Updegraff, deceased, and Ruth E. Whitaker, against the Whitaker Iron Company and others. From a decree dismissing the bill, complainants appeal. Affirmed.

For opinion below, see 238 Fed. 980.

Henry A. Brann, Jr., of New York City, for appellants.

John A. Howard, of Wheeling, W. Va. (George R. E. Gilchrist, of Wheeling, W. Va., on the brief), for appellees.

Before PRITCHARD, KNAPP, and WOODS, Circuit Judges.

PRITCHARD, Circuit Judge. This is an appeal from a decree of the District Court of the United States for the Northern District of West Virginia. The facts upon which the decree is based are as follows:

In 1900, the Whitaker Iron Company acquired the Wheeling Corrugating Company for $250,000 in Whitaker Iron Company stock. In doing that two distinct methods were used; one by which the Wheeling Corrugating Company conveyed its property and assets to the Whitaker Iron Company, which assumed payment of the liabilities of the Wheeling Corrugating Company, and the other by which the individual stockholders of the Wheeling Corrugating Company assigned and delivered their stock to the Whitaker Iron Company and received in return $250,000 in Whitaker Iron Company stock. Thus the Whitaker Iron Company became the owner of all the property and assets as well as the entire capital stock of the Wheeling Corrugating Company.

From the time of that transfer in 1900 to near the close of 1904, the business of the Wheeling Corrugating Company was conducted by the Wheeling Corrugating Company in its own name as the business had theretofore been conducted; but its entire capital stock, consisting of 2,255 shares, was owned by the Whitaker Iron Company and voted at stockholders' meetings of the Wheeling Corrugating Company by the Whitaker Iron Company, except 6 shares, which by action of that company's board of directors September 26, 1900, were transferred to six different persons, so as to qualify them to serve as directors of the Wheeling Corrugating Company.

Toward the close of 1904, the Whitaker Iron Company, together with the Laughlin Nail Company, entered into an arrangement for the organization of the Whitaker-Glessner Company, whereby a certain plant of the Whitaker Iron Company, then an operating company in Wheeling, was to be transferred to the Whitaker-Glessner Company, and a certain other plant of the Laughlin Nail Company, then an operating company in Martins Ferry, Ohio, was to be transferred to the Whitaker-Glessner Company. In addition to its plant in Wheeling, the Whitaker Iron Company agreed to transfer to the Whitaker-Glessner Company 2,255 shares of the capital stock of the Wheeling Corrugating Company, and to sell to the Whitaker-Glessner Company the good will of the Wheeling Corrugating Company. At that time the Whitaker Iron Company was the owner of all of the capital stock of

Digitized by Google

the Wheeling Corrugating Company, aside from the 6 qualifying shares mentioned, and also held the legal title to all the property and assets of the Wheeling Corrugating Company.

When this property came to be appraised by the interests of the Laughlin Nail Company, the other party to the formation of the Whitaker-Glessner Company, it was noticed that the Wheeling Corrugating Company had divested itself of all its property and assets by its transfer to the Whitaker Iron Company in 1900, but that the Whitaker Iron Company was also the holder of all of the capital stock of the Wheeling Corrugating Company. Thereupon, to give to the 2,255 shares of Wheeling Corrugating Company stock the value of $1,322,900.79, and its good will the value of $255,200, at which they were being sold to the Whitaker-Glessner Company by the Whitaker Iron Company, the Whitaker Iron Company and the Wheeling Corrugating Company, by unanimous vote of their stockholders and by action of their respective boards of directors, rescinded the action whereby the Wheeling Corrugating Company conveyed its property and assets to the Whitaker Iron Company, as was done in 1900; but the acquisition of the capital stock of the Wheeling Corrugating Company by the Whitaker Iron Company in 1900, as the other method adopted to acquire the Wheeling Corrugating Company, was ratified and confirmed; and, following such corporate action in 1904 by the two corporations interested, the Whitaker Iron Company conveyed, and the Wheeling Corrugating Company received back, the same property that had been conveyed in 1900.

From the time in 1900 when the Whitaker Iron Company bought the Wheeling Corrugating Company for $250,000 in Whitaker Iron Company stock to the time in 1904 when the Whitaker Iron Company made the reconveyance to the Wheeling Corrugating Company the net earnings of the Wheeling Corrugating Company had been allowed to accumulate; and this caused it to come about that in the formation of the Whitaker-Glessner Company the Whitaker Iron Company received for the 2,255 shares of the capital stock of the Wheeling Corrugating Company and for the good will of the Wheeling Corrugating Company the sum of $1,676,000, which was paid to it by the Whitaker-Glessner Company in 16,760 shares of the capital stock of the Whitaker-Glessner Company, of a par value of $100 per share.

The Whitaker Iron Company disposed of its 16,760 shares of Whitaker-Glessner Company stock on January 27, 1904, by ordering a distribution in kind amongst its own stockholders of shares of Whitaker-Glessner Company stock equivalent to a 300 per cent. dividend on its own $500,000 capital stock, making 15,000 shares, and delivered in pledge 1,500 other shares to Robert C. Dalzell, as trustee, as collateral to secure the bonds of the Portsmouth Steel Company, then a subsidiary corporation, and retained in its own treasury 260 other shares, thus making the total of 16,760 shares.

Pursuant to ordering the distribution to its own stockholders of the 15,000 shares of Whitaker-Glessner Company stock January 27, 1904, the Whitaker Iron Company on March 15, 1905, by action of its stockholders and directors, had the Whitaker-Glessner Company is-

Digitized by Google

sue and deliver the 15,000 shares direct to and amongst the stockholders of the Whitaker Iron Company, according to their respective interests, and in that distribution the estate of George P. Whitaker received 1,500 shares; that number of shares being the equivalent of a 300 per cent. dividend upon the 500 shares of Whitaker Iron Company stock the estate then owned.

This holding of 1,500 shares of Whitaker-Glessner Company stock by George P. Whitaker's estate was increased 750 shares by a 50 per cent. stock dividend declared by the Whitaker-Glessner Company April 30, 1910, and thereby that estate came to own 2,250 shares of Whitaker-Glessner Company stock.

The estate of George P. Whitaker, pursuant to a decree of the circuit court of Cecil county, Md., filed April 17, 1912, in equity cause No. 2,913, made a distribution of these identical 2,250 shares of Whitaker-Glessner Company stock, and on June 12, 1912, Martha E. Whitaker, as executrix of Carrie C. Updegraff's will, received from the estate 282 shares of Whitaker-Glessner Company stock, her full distributive share, and on June 12, 1912, Ruth E. Whitaker received from the estate 94 shares of Whitaker-Glessner Company stock, likewise her full distributive share.

The estate of George P. Whitaker, deceased, is now the owner of 500 shares of stock of the Whitaker Iron Company. Martha E. Whitaker, as executrix of the will of Carrie C. Updegraff, deceased, is entitled as one of the appellants to an undivided one-tenth interest in the estate of George P. Whitaker, deceased; Ruth E. Whitaker, the other appellant, is entitled to an undivided one-thirtieth interest in the estate of George P. Whitaker, deceased; together appellants are entitled to an undivided four-thirtieths interest in the estate of George P. Whitaker, deceased.

The appellants, among other things, prayed that:

"And these plaintiffs further pray for discovery in full and deposit in this court, and that said designated defendants, and the legal representatives thereof, be required to set forth a complete list and description of every date, book, account, record, and writing of whatsoever nature, relating to or connected with the aforesaid matters, or any of them, which now are or ever were in their possession or control, or state where same can be found, if removed therefrom, and deposit the same in the office of the clerk of this court for inspection."

In response thereto the appellees produced the records of the corporation bearing upon the matters in controversy before the court below for its inspection, and in verification of the certified copies which were filed with and made a part of the pleadings of appellees. The court below found the facts as they were shown to be by the discovery made through the production of the corporate records mentioned, and also found that appellants, having prayed for full discovery, had been given what they asked for, and could not now be permitted to refuse to receive that which they had called for, the authenticity of which they did not deny.

Accordingly, the suit was dismissed in the court below upon the grounds: (a) That the appellants were not bona fide stockholders; (b) that upon the showing made by the discovery the appellants were

Digitized by Google

not entitled to the relief which they seek; (c) upon jurisdictional grounds.

[1] We will first consider the question as to whether the appellants are entitled to maintain this suit. While they do not allege that they are the owners of any of the stock of what is known as the Whitaker Iron Company, they do allege that the estate of George P. Whitaker owns stock in the Whitaker Iron Company, and that they are entitled upon a distribution of that estate to receive a certain number of the shares of such stock. The will of George P. Whitaker, deceased, empowers the trustee to convert the stock of the Whitaker Iron Company into money and, after complying with the residuary clauses of the testator's will by satisfying advancements and charges to be made against each of the distributees, to distribute the rest of the fund as directed: "To be paid and distributed * * * to * * * Carrie Whitaker and George P. Whitaker, Jr., share and share alike."

These appellants take through George P. Whitaker, Jr., and Carrie Whitaker, and the provision in the will, "To be paid and distributed * * * to * * * Carrie Whitaker and George P. Whitaker, Jr.," implies the payment of money and the distribution of the same. This provision of the will clearly shows that it was the purpose of the testator to have the trustee, whom he invested with the legal title to this stock, dispose of the same by converting it into money and making an equal distribution of the proceeds thereof subject to the limitations mentioned. The learned judge who heard this case in the court below, in referring to this phase of the question, among other things, said:

"In the memorandum opinion heretofore filed, I expressed doubt as to whether plaintiffs are entitled to be considered stockholders of the Whitaker Iron Company. I then held that the determination of that question must depend largely upon the terms of George P. Whitaker's will, which was not before me, and upon whether or not plaintiffs held, by any other independent title, shares of stock in the Iron Company. For this reason I required the supplemental bill or statement to be filed by plaintiffs touching these two points. This supplement discloses that plaintiffs hold no stock other than as distributees of George P. Whitaker's estate, which they claim has devolved by law upon them. Whether this is so or not must depend upon the construction to be given the Whitaker will. An authenticated copy of it is not yet filed in the case, but what purports to be an unauthenticated copy of it is presented by plaintiffs, which seems to be conceded by defendants to be a true copy. From it, it is clear that testator first directed his stock in the Iron Company and other personalty to be held in trust for the benefit of his widow and upon her death to go into his residuary estate, which residuary estate was to be divided equally between his five children, but advancements made to, and debts owing from, these children were to be ascertained from his books and accounted for by each in the distribution. He then adds: 'My sons Henry C. Whitaker and Cecil N. Whitaker being dead, the share of Henry C. I hereby direct to be paid and distributed to his children, Carrie Whitaker and George P. Whitaker, Jr., share and share alike.' Plaintiffs take only through Carrie Whitaker and George P. Whitaker, Jr., and then take only such sum of the whole residuary estate, now in the hands of the Maryland executor and not yet finally settled; this stock and other personalty has been reduced to money and the amounts, if any, that Henry C. Whitaker may have owed his father, the testator, are charged and accounted for. I cannot see, from the terms of this will, the Iron Company's stock in kind. have or can devolve by law upon plaintiffs, unless, by agreement between

Digitized by Google

them and the executor of the estate, they are transferred to and accepted by them in lieu of the money the will gives them."

Under these circumstances it cannot be said that any of the stock devolved by operation of law upon either of the appellants. "An estate is said to 'devolve' on another when by operation of law, and without any voluntary act of the previous owner, it passes from one person to another; but it does not devolve from one person to another as the result of some positive act or agreement between them. The word is itself of intransitive signification, and does not include the result of an act which is intended to produce a particular effect. It implies a result without the intervention of any voluntary actor. Francisco v. Aguirre, 29 Pac. 495, 497, 94 Cal. 180; First Nat. Bank of San Jose v. Menke, 60 Pac. 675, 677, 128 Cal. 103." Volume 3, Words and Phrases (Old Series), page 2050. Thus it will be observed that appellants do not own a single share of stock in the Whitaker Iron Company by gift or purchase, and, as we have stated, none of these shares of stock devolved upon either of them by operation of law.

Among other things, the bill contains the following allegation:

"Said estate has not been judicially settled. By the terms of his will, settlement was suspended during the lifetime of said testator's widow. Death has called her to his realm of eternal dreams. The defendant Joseph C. Coudon is the only surviving executor trustee of said will and estate of George P. Whitaker."

[2, 3] According to appellants' own showing, they would not be entitled to any of the shares of stock which "have not been judicially settled." The showing made by appellees in the court below in response to the request of appellants clearly shows that there is no foundation upon which to maintain this suit, even if the appellants had been bona fide stockholders at the time of the institution of the same. The court below, in referring to this point, among other things, said:

"Now that the defendants have substantially complied with this prayer, I am not inclined either to reject or refuse to consider these records at the instance of these plaintiffs so asking their production; and in this condition of things I am constrained to believe that only a very few facts drawn from these records will be necessary to show that plaintiffs' charges are groundless and they have no standing in equity. The bill charges that the Iron Company bought the Corrugating Company on September 17, 1900, for $250,000, and that on January 21, 1904, some three years and four months thereafter, the Iron Company 'conveyed its West Virginia properties to the former company (Whitaker-Glessner) for a consideration of 16,760 shares of the latter's capital stock, par value $1,676,000.' Those records show the fact to be that the Iron Company sold to the Whitaker-Glessner Company the capital stock of the Corrugating Company alone for 16,760 of these shares, par value $1,676,000, and that 15,000 of these shares were distributed in kind to Geo. P. Whitaker's estate, from which plaintiff Martha E. Whitaker, executrix, received 282 shares, and plaintiff Ruth E. Whitaker 94 shares. The contract filed shows that they have sold these shares to Gutman and his associates for $115 per share. Taking the facts admitted by the bill, and supplement them with the few above stated from these supplied records, it is apparent that these officers, directors, and controlling stockholders so bitterly charged with fraud, mismanagement, and corruption, in fact secured by purchase for their corporation, charged to have been defrauded in the premises, the Corrugating Company for $250,000, and in less than three years and a half thereafter sold it for more than six times the price given for it, taking in payment stock at

Digitized by Google

par which in fact was worth and was actually sold by these plaintiffs at an advance of $15 on the $100 par value. This purchase and sale of the Corrugating Company, it is to be borne in mind, was consummated more than a decade ago, when there were no unusual conditions, such as now exist, to advance prices for such properties. Comment is hardly necessary. It is reasonable to infer, I think, that a good many corporation stockholders in this country would be really delighted to be 'defrauded' in this way. It is well settled that any minority stockholder, seeking redress, must act promptly. Laches in such matters should always put a chancellor upon guard and cause him to more carefully ascertain the circumstances, and facts before assuming jurisdiction in the premises. Here more than 16 years have elapsed since the purchase was made of the Corrugating Company, more than 12 since the 'backdated reconveyance,' and more than 2 years elapsed, after plaintiffs sold their stock, before they instituted this suit."

The foregoing is conclusive, and for the reasons hereinbefore stated we are of opinion that the decree of the lower court should be affirmed.

WOODS, Circuit Judge. I concur in the result on these grounds: The transactions complained of as fraudulent are alleged to have taken place from the years 1900 to 1904, more than 12 years before the bill was filed on the 7th of April, 1916. There was no allegation of ignorance on the part of the plaintiffs of the alleged fraud, nor how nor at what time they obtained knowledge of it, nor what efforts were made to ascertain the facts. This delay, without explanation, constitutes such laches as to warrant dismissal of the bill upon its face. Wollensak v. Reiher, 115 U. S. 96, 5 Sup. Ct. 1137, 29 L. Ed. 350; Hardt v. Heidweyer, 152 U. S. 547, 14 Sup. Ct. 671, 38 L. Ed. 548.

In addition to this, the plaintiffs in their bill make only the most general and indefinite charges of fraudulent conversion of corporate assets by the directors. The tenor of the bill indicates plainly that they relied upon discovery to be made by the defendants to make evident particulars of the transactions mentioned to establish the indefinite charges of fraud. The answer of the defendant and its exhibits is a substantial and full response to the demand for discovery. They set out the particulars of all the transactions brought in question by the plaintiffs, and so far from giving any indication of fraud they tend strongly to show that all earnings and profits of the several corporations involved were properly applied for the benefit of the stockholders. Since the plaintiffs relied on discovery to establish their charges, and discovery has shown nothing tending to establish them, the District Court was right in dismissing the bill for lack of equity in this respect, as well as for laches.

Digitized by Google

(249 Fed. 538)

KROUSE et al. v. BREVARD TANNIN CO. et al.

(Circuit Court of Appeals, Fourth Circuit. February 5, 1918.)

No. 1563.

1. CORPORATIONS ⟹211(6)—STOCKHOLDER'S SUIT—SUFFICIENCY OF BILL—JURISDICTIONAL ALLEGATIONS.

Equity rule 27 (198 Fed. xxv, 115 C. C. A. xxv), prescribing the jurisdictional requisites of a stockholder's bill, as has been stated by the Supreme Court, which framed it, "is intended to have a practical operation, and to have that it must as to its requirements be given such play as to fit the requirements of different cases." If the allegations of the bill are deemed too general by defendants, their remedy is by motion for further and better particulars under rule 20 (198 Fed. xxiv, 115 C. C. A. xxiv); but the requirement that the bill set forth with particularity the efforts of plaintiff to secure such action as he desires does not apply, where the allegations clearly show that by reason of antagonistic control of the corporation such efforts would have been futile.

2. CORPORATIONS ⟹211(6)—STOCKHOLDER'S SUIT—SUFFICIENCY OF BILL.

A stockholder's bill *held* to state facts sufficient to entitle complainants, as minority stockholders, to invoke the jurisdiction of a court of equity.

3. CORPORATIONS ⟹210—STOCKHOLDER'S SUIT—PARTIES.

A suit in a federal court by minority stockholders against the corporation, which is a corporation of the state, having its property and business therein, and the managing director, who is also a citizen and resident of the state, in which the bill alleges transactions by the directors, who are also the principal stockholders, by which the corporation has been defrauded of property for their individual benefit, should not be dismissed on motion because the other directors are not parties, where by reason of their being out of the jurisdiction they cannot be served, and if brought in their joinder would oust the jurisdiction of the court. In such case, such directors, while proper, are not indispensable, parties, even though full relief as to all the transactions alleged cannot be granted without their presence, and the court, having jurisdiction over the corporation and its property, may and should, under equity rule 39 (198 Fed. xxix, 115 C. C. A. xxix), and Judicial Code (Act March 3, 1911, c. 231) § 50, 36 Stat. 1101 (Comp. St. 1916, § 1032), proceed without them, and grant such relief as the proofs may warrant and as is within its power.

4. COURTS ⟹347—UNITED STATES COURTS—PROCEDURE—MOTION TO DISMISS BILL.

While it is within the discretion of the court to entertain a motion to dismiss a bill for want of equity apparent upon its face, made under equity rule 29 (198 Fed. xxvi, 115 C. C. A. xxvi), at any time before the hearing, the rule contemplates that it be made before the answer is filed, and if made afterward it must be determined on the allegations of the bill, without aid from the denials or allegations of the answer.

Appeal from the District Court of the United States for the Western District of North Carolina, at Asheville; James E. Boyd, Judge.

Suit in equity by Charles C. Krouse and Louis T. McFadden against the Brevard Tannin Company and William F. Decker. From a decree dismissing the bill, complainants appeal. Reversed.

⟹For other cases see same topic & KEY-NUMBER in all Key-Numbered Digests & Indexes

Digitized by Google

Mark W. Brown, of Asheville, N. C. (Clarence E. Sprout, of Williamsport, Pa., and John E. Cupp, of Philadelphia, Pa., on the brief), for appellants.

Duff Merrick and F. A. Sondley, both of Asheville, N. C., for appellees.

Before KNAPP and WOODS, Circuit Judges, and CONNOR, District Judge.

CONNOR, District Judge. Plaintiffs are citizens and inhabitants of the state of Pennsylvania. Defendant Brevard Tannin Company is a corporation chartered pursuant to the laws of North Carolina, January 13, 1903, conducting its corporate business in the Western district of said state. Defendant, Wm. F. Decker, is a citizen and inhabitant of the same state.

Plaintiffs, in their bill, allege: That the objects and purposes for which defendant corporation was formed are: To erect and operate factories for the manufacture of tanning extracts, and other extracts obtained from trees, bark, leaves, plants, etc. To conduct a general tanning business, manufacturing leather and leather goods and other products made from skins, hides, and peltry of animals. To deal in all kinds of timber, logs, wood, barks, etc., and to manufacture them into all kinds of marketable products and commodities. To manufacture, buy, sell, and otherwise deal in extracts, oils, fertilizers, glue, etc. That the authorized capital stock of said corporation is $500,000, divided into shares of $100 each, one half to be preferred and the other half common stock. That, of the authorized issue, 1,750 shares of preferred and 1,250 shares of common stock has been issued. That Edward D. Adams owns 1,100 shares preferred and 620 shares of common stock. That George L. Adams owns 335 shares preferred and 311 shares of common stock. That defendant W. F. Decker owns 100 shares preferred and 100 shares common stock. Plaintiff Chas. C. Krouse owns 42 shares preferred and 41 shares of common stock. Louis T. McFadden owns 49 shares preferred and 41 shares common stock. George L. Adams, Edward D. Adams, and Wm. F. Decker are, and have been since its organization, directors of the company. George L. Adams is, and has been since its organization, president; Wm. F. Decker, secretary and treasurer and manager of the company.

As grounds of complaint, and the basis upon which complainants seek the intervention of the court and relief against the alleged wrongful conduct of the majority stockholders, directors, and managing officers of the company, the plaintiffs, among other things, allege: That they have, at all times, refused to permit plaintiffs to have any voice in the control and management of the company. That Edward D. Adams has never attended a meeting of the board of directors, never visited the plant, or given any attention to the affairs of the company, but has willfully neglected and carelessly absented himself from the meetings of the board of directors. Practically the same complaint is made of Geo. L. Adams, another director, with the result "that the business is deteriorating" in a number of respects, pointed out in the bill. That the said directors, being also the managing officers, with in-

Digitized by Google

tention of defrauding the Brevard Tannin Company and the complainants, caused to be issued and delivered to the said W. F. Decker, one of the directors aforesaid, 100 shares of the common stock of the company, for which no consideration passed from the said parties to the company, "but the same was issued and delivered to the said Wm. F. Decker as a part of an unlawful and fraudulent agreement between the said Edward D. Adams, Geo. L. Adams, and Wm. F. Decker, as hereinafter set out." That on the 15th day of March, 1913, the said Edward D. and George L. Adams and Wm. F. Decker caused a deed to be executed of the company to John W. McMinn, for the nominal consideration therein expressed of $10, conveying to said McMinn certain tracts of land described in an exhibit attached for the real consideration of $27,000. That there was no warrant or authority given to the said parties to make such sale, but that it was made at a grossly inadequate price, to the great prejudice of the company. That on October 28, 1912, defendant Wm. F. Decker, director of said company, entered into a contract with one Louis Carr, afterwards assigned to the Carr Lumber Company, by which said Decker was to receive all of the wood usable in making tanning extracts from a tract of land containing 69,000 acres, a part of the Vanderbilt estate. That an interest in the said contract was subsequently assigned by Decker to George L. Adams. That in making said contract Decker was acting for and in behalf of the stockholders of the Brevard Tannin Company, and said contract was in fact made by Decker with Carr, for the use and benefit of the said company. That the contract was made in his own name, and he has refused and neglected, and still refuses and neglects, to assign the same to the company. That the contract was taken in the name of Decker, pursuant to a fraudulent agreement and understanding between said Edward D. and Geo. L. Adams and Decker. That by the sale of the land to McMinn the company was denuded of all woodland which it then owned, and all of its available wood supply in that vicinity taken from it. That the issue of the 100 shares of stock to Wm. Decker was made in consideration of the promise of said Decker to supply the company with wood from the Vanderbilt tract. That he is not now able, nor has he been able since the execution of said contract, to supply the company with wood, except by virtue of the acquiescence of the Champion Fibre Company, to which said Decker has sold all of the wood to be taken from the Vanderbilt tract, to the extent of his capacity to produce during the whole period of his contract with said Louis Carr.

The bill charges: That Wm. F. Decker embezzled and converted to his own use $93.11 of the money of the defendant company. That he forged the name of one John Morris upon a check drawn by said company for $337.75, appropriating the amount to his own use. That said Decker fraudulently appropriated other money belonging to said company to his own use, giving particulars thereof—all of which acts on the part of Decker were well known, or should have been known, to said Edward D. and Geo. L. Adams. That Decker cut wood from the lands of the company, and sold same, of the value of $456, to the Champion Fibre Company, which he converted to his own use.

Digitized by Google

That by reason of the negligence, carelessness, and inattention of the business of the said directors and managing officers the stockholders of the company have been damaged, the property allowed to depreciate and decay, its business permitted to be dissipated, so that the company has lost approximately the sum of $50,000 a year during the year 1915, and during the year 1916 the sum of $100,000 per year, etc.

For the purpose of meeting the jurisdictional requirements of equity rule 27 (198 Fed. xxv, 115 C. C. A. xxv; Hopkins, Eq. Rules [2d Ed.] 172), complainants allege: That they were shareholders of the company at the times of the transactions mentioned, of which they complain. That the suit is not a collusive one to confer jurisdiction on the District Court of the United States for the Western District of North Carolina, of which said court would not otherwise have jurisdiction, but is instituted in good faith for the purposes herein stated. That they brought the transactions of which they complain to the attention of said Edward D. Adams, Geo. L. Adams, and Wm. F. Decker, as officers and directors of said Brevard Tannin Company, so they would have full opportunity to redress said wrongs; but said officers and directors failed and refused so to do, and assumed the same antagonistic and partisan attitude as that theretofore manifested by them towards plaintiffs.

The bill prays that process issue to the defendant company and to Wm. F. Decker. The other directors are not within the jurisdiction of the court and are not joined as defendants. They pray that a receiver be appointed to preserve the property of the company until the final decree, and for such other and further relief as the nature and circumstances of the case require, etc.

Defendants filed joint answer, denying all of the material allegations of the bill, setting out, by way of exhibits, the contracts referred to and the correspondence between complainants and the officers and directors of the company. The record states that, after the bill and answer had been filed, and after depositions had been taken by defendants, on the merits of the suit, and after said action had been set down for hearing, defendants orally moved to dismiss the bill upon the ground that it did not allege facts sufficient to constitute a cause of action, and upon the further ground that it appeared from the bill that Geo. L. Adams and Edward D. Adams were indispensable parties defendant and that they were without the jurisdiction of the court, and if they were made parties defendant the jurisdiction of the court would be ousted, because of the citizenship of the said George L. and Edward D. Adams; and it was upon this motion that the final decree was entered. This statement is signed by the District Judge. The decree dismissing the bill recites the motion and:

> "That the court is of opinion that said bill fails to properly allege facts sufficient to constitute the cause of action therein attempted to be set up, and said bill is therefore hereby dismissed."

[1] The brief, and oral argument of defendants, challenge the right of the complainants to invoke the equitable power of the court, because they have not complied with the requirements of equity rule 27. As this question lies at the threshold of the discussion, it should be

Digitized by Google

disposed of before the sufficiency of the bill, in other respects, is considered.

The rule prescribing the allegations which are required to be made, in bills brought by stockholders in such cases, was first formulated in 1882 and known as equity rule 94, in accordance with the conclusion reached by the courts as the result of former decisions. Hawes v. Oakland, 104 U. S. 450, 26 L. Ed. 827. In the new equity rules of 1912 it is No. 27. 226 U. S. 656, 33 Sup. Ct. xxv; Hopkins, New Fed. Eq. Rules, Annotated (2d Ed.) 172. The only addition made to the original rule are the words at the end, "or the reasons for not making such effort." 213 U. S. 435, 29 Sup. Ct. 540, 53 L. Ed. 862. The bill, in regard to the sufficiency of the allegation required, of the particularity of the efforts of the plaintiffs to secure such action as they desired on the part of the managing directors and, "if necessary, of the shareholders," is critically analyzed. It is insisted, and authorities cited to maintain the contention, that the averments made by complainants that "they brought the transactions of which they complain to the attention of the directors," etc., does not meet the requirements of the rule; that the complainants should have set forth the time and place, the specific manner in which the efforts were made, etc. It is further objected to the sufficiency of the averment that complainants were shareholders at the time of the transactions complained of; that they should have stated the dates upon which they became shareholders.

In regard to the criticism of the bill upon the first ground, it would seem that if the directors were informed of the conduct complained of, and an opportunity given them to investigate the truth of the charges, and they failed and refused to do so, or to take any action in regard thereto, the spirit of the rule was complied with. While it may be that complainants should have alleged the date upon which they became shareholders, the remedy for their failure to do so was to move the court, as permitted by rule 20 (198 Fed. xxiv, 115 C. C. A. xxiv), that "further and better particulars" in this respect be furnished. This is a new rule, based upon the English practice. A number of defendant's grounds of objection to the bill would have been met by its application. The purpose and scope of the rule—construed in the light of decisions of the English Court of Chancery—is discussed in an enlightening and interesting manner by Judge Dayton (D. C. N. D. W. Va.) in Whitaker v. Whitaker Iron Co., 238 Fed. 980. The principle upon which rule 94 (27) is founded, before its adoption, and the rule itself, has been discussed and construed in a large number of cases in the federal courts. Many of them are cited in the briefs of counsel in this case. While the underlying thought upon which the rule is based is well understood, of necessity its application is, to a large extent, dependent upon the facts developed in each case. "Rule 94 is intended to have practical operation, and to have that it must, as to its requirements, be given such play as to fit the conditions of different cases." Del. & Hudson Co. v. Albany & Sus. R. R. Co., 213 U. S. 435, 29 Sup. Ct. 540, 53 L. Ed. 862. In that case the questions certified to the court present, in a large measure, the contentions made in this appeal. The rule is quoted—the last clause—prescribing the

Digitized by Google

necessity for setting forth, with particularity, the efforts of plaintiffs to secure action on the part of the managing directors or trustee, and, if necessary, of the shareholders, and the causes of their failure to obtain such action, constituted the debated point in the case. Mr. Justice McKenna, in an enlightening opinion, discusses the decisions and principles involved, saying:

"The purpose of the rule hardly needs explanation. It is intended to secure the federal courts from imposition upon their jurisdiction and recognizes the right of the corporate directory to corporate control; in other words, to make the corporation paramount, even when its rights are to be protected or sought through litigation. Cases in this court have indicated such right. But the directory may be derelict and the interest of stockholders put in peril, and a case hence arises in which the right of protecting the corporation accrues to them. Rule 94 (27) expresses primarily the conditions which must precede the exercise of such right, but emergencies may arise in which the antagonism between the directory and the corporate interest may be unmistakable, and the requirements of the rule may be dispensed with, or it is more accurate to say, do not apply."

After citing cases, in which the requirements of the rule were enforced, the learned justice cites as an illustration of the cases, "where the circumstances take the cases out of the rule." Doctor v. Harrington, 196 U. S. 579, 25 Sup. Ct. 355, 49 L. Ed. 606. After stating the essential allegations in the bill in that case, he says:

"It will be observed, therefore, that there was no compliance with the requirements of rule 94 (27), as expressed in its letter. The efforts that were made to secure the action of the managing directors or trustees were not 'set forth with particularity.' Nothing was alleged but the domination of John J. Harrington and his control of the directors. What he did, and in what way he exerted control, was not alleged. In other words, the bill seemed to show a case, not of compliance with the requirements of rule 94 (27), but circumstances which excused from such compliance. * * * And we decided that these principles (upon which the rule was based) were satisfied by the allegations of the bill and that such antagonism existed between the complainants in the suit and the directors of the corporation that they would suffer irremediable loss if not permitted to sue. In other words, complainants were in such a situation by reason of the power which Harrington possessed over * * * the corporation—directors and stockholders—that appeals to them for action would have been futile."

Almost every suggestion made in this case is made and disposed of in the opinion in that case. A few illustrative cases may be cited:

"Equity rule 27, * * * which requires certain preliminary steps to be taken by the stockholder before bringing his suit, will be dispensed with when the interests of the directors are antagonistic to those of the corporation, where this fact is shown by the pleadings." Ogden v. Gilt Edge Consol. Mines Co. (C. C. A. 8th Cir.) 225 Fed. 723, 140 C. C. A. 597:

"The bill alleges that plaintiff has not made request of the officers and directors to bring the action because of the fact that such request would be a useless and idle performance, and that the defendants McKinney and associates, who made the contract, and benefit by it, are in the absolute control of the affairs of Quinescec. The record fully sustains these allegations. The requirement of equity rule 27, in the respect referred to, was thus met."

An exhaustive review of the recently decided cases in Heinz v. Nat. Bank of Commerce, 237 Fed. 942, 150 C. C. A. 592, relieves us of the necessity of doing more than refer to the opinion of Judge Booth in that case. In Wathren v. Jackson Oil & Refining Co., 235

Digitized by Google

U. S. 636, 35 Sup. Ct. 225, 59 L. Ed. 395, Mr. Justice Hughes, in pointing out the respects in which the bill failed to comply with the rule, says:

"Nor does it appear that, by reason of antagonistic control of the corporation, such a request would be futile."

There the plaintiff was the holder of a majority of the stock—no suggestion of fraud is made. The class of cases coming within the exception to the rule is stated by Mr. Justice Brandeis in United Copper Co. v. Amal. Copper Co., 244 U. S. 261, 37 Sup. Ct. 509, 61 L. Ed. 1119, as when the directors "stand in a dual relation which prevents an unprejudiced exercise of judgment," or "that such application would be futile (as when the wrongdoers control the corporation)." The allegations in the bill, which, upon its motion, defendants admit to be true, bring the case clearly within the cases to which, as said by Mr. Justice McKenna, "the rule does not apply."

[2] We are thus brought to consider the challenge made to the bill and sustained by the court—that it does not sustain facts sufficient to constitute a cause of action, or to entitle the complainants to seek any relief in a court of equity. It is true that the specific relief demanded is the appointment of a receiver; but the court is not compelled to grant the prayer, but may, upon the proofs adduced, either dismiss the bill for failure of proof, or grant such relief as, upon the allegation and proof, the complainants show themselves entitled to. If, as alleged and admitted by the motion to dismiss, the managing officers, being also the majority shareholders, have conducted the affairs of the corporation, conveyed its property, made contracts, as alleged—committed other acts prejudicial to the interests of the complainants, minority stockholders—it would seem that a court of equity should take cognizance at least to the extent of investigating and ascertaining the truth in regard to the transactions set forth in bill. It may be that, upon full investigation, the defendants will be able to show that the plaintiffs are making a false clamor, and that they have no ground for complaint. It appears that an answer was filed and depositions taken by defendants before the motion to dismiss was made. It would seem more in accordance with the course usually pursued by courts of equity that the cause should proceed to a hearing rather than at this stage of the proceeding a motion to dismiss allowed. We are of the opinion that there was error in holding that the bill did not allege facts sufficient to entitle plaintiffs to invoke the jurisdiction of the court.

[3] It is said, however, that Edward D. Adams and George L. Adams are indispensable parties defendant, and that, if brought into the case as defendants, the jurisdiction of the court would be ousted. While, as provided by rule 29 (198 Fed. xxvi, 115 C. C. A. xxvi), the motion to dismiss may be made for nonjoinder of essential parties, the practice of courts suggest, not a decree dismissing the bill, but an order to make such parties. It is insisted that this would not help the complainants, because, as George L. Adams is a citizen and resident of Pennsylvania, the residence of complainants, upon being brought into the record, a case would be created wherein complainants and

Digitized by Google

one of the defendants are citizens and residents of the same state. Rule 39 (198 Fed. xxix, 115 C. C. A. xxix; Hopkins, New Fed. Eq. Rule 204) provides that:

"In all cases where it shall appear to the court that persons who might otherwise be deemed proper parties to the suit cannot be made parties by reason of their being out of the jurisdiction of the court, or incapable otherwise of being made parties, or because their joinder would oust the jurisdiction of the court as to parties before the court, the court may, in its discretion, proceed in the cause without making such persons parties; and in such case the decree shall be without prejudice to the rights of the absent parties."

See, also, Judicial Code, § 50.

Are Edward D. Adams and Geo. L. Adams necessary, or indispensable, or only proper, parties? For an interesting discussion and analysis of decided cases regarding this question, which has given to federal courts much concern, see Street's Fed. Eq. Prac. vol. 1, § 502 et seq. It may be conceded that, if Edward D. and George L. Adams are indispensable parties, within the definition found in well-considered opinions of the Supreme Court, the bill must be dismissed. It is not within the saving provisions of equity rule 39, or section 50 of the Code. The corporation is a party defendant, served with process on its secretary and treasurer, and one of the directors, Wm. F. Decker, individually, also is a party. It is insisted that, because the other two directors, nonresidents, who have willfully and negligently failed to discharge their manifest duties as directors, and have either knowingly or fraudulently permitted its managing officer to make contracts in fraud of, and prejudicial to, its property and interests, and embezzle its funds, are not made parties because service cannot be had on them, the court had no power to make any decree for the protection of the property or the rights of the shareholders. We are unable to perceive why, with the corporation and its managing director, secretary, and treasurer, under whose control the property is found, as parties to the suit, a decree may not be made appointing a receiver of the property, with direction that he bring such actions, or suits in equity, against the directors, or other persons, as may be necessary to protect its interests. Whether in this suit decrees may be made, regarding the transactions set out in the bill of which plaintiffs complain, in the absence of Edward D. and George L. Adams, is not necessary to decide. If the court has before it the necessary parties to enable it to grant any substantial relief, the bill should not be dismissed. While it is true that, in the absence of George L. Adams, a decree cannot be made giving relief to the company for the wrong sustained on account of the matters alleged in regard to the contract made with Louis Carr, and alleged to have been assigned to Geo. L. Adams, pursuant to a fraudulent agreement between Edward D. Adams, Geo. L. Adams, and W. F. Decker, the fact that the contract was made and assigned to Geo. L. Adams, under the circumstances alleged, establishes for the purpose of this suit a valuable property right in the company, which should be protected and enforced in some appropriate manner by this court, or through its receiver. The purpose for which the intervention of the court is invoked in this suit is not necessarily that

Digitized by Google

decrees be made herein, respecting such transaction, of which complaint is made, but that full and complete relief be afforded to the corporation against the frauds, neglects, and wrongdoings—breaches of duty—of its directors and officers. This is not a case in which the title to the corporate property is vested in the directors, and it is sought to affect it—transfer title or otherwise. The property, rights of action, and remedies for wrongs sustained by the corporation are vested in the corporate entity, which is unable to assert or enforce them or protect its property, by reason of the antagonistic relation assumed by its officers and directors. The condition presented by the record is somewhat similar, in this respect, to that dealt with in Lowenthal v. Georgia Const. & P. R. R. Co. (D. C.) 233 Fed. 1010. The defendant railroad company executed a deed to the Columbia Trust Company, of New York, to secure a large bonded indebtedness. The plaintiff held $6,000 of the bonds, upon which default had been made in payment of interest. He called upon the trustee to take action for the foreclosure of the trust. The trustee declined to act. The plaintiff, among other things, alleged that the corporation was insolvent, etc. Upon a motion to dismiss the bill, because the trust company was not a party, Judge Speer—quoting rule 39—said:

"The contention that the bill must be dismissed because the trustee is not made a party defendant is equally unfounded. The trustee is a corporation and a citizen of New York. It is not found in this district, and does not voluntarily appear. But the railway property is here, and to this the lien and mortgage securing plaintiff's bonds inheres. Here, also, is the defendant corporation, a corporation of this state. In such cases the court may entertain jurisdiction and proceed to the trial and adjudication of the suit between the parties who are properly before it; but the judgment and decree rendered therein shall not conclude or prejudice other parties not legally served with process, nor voluntarily appearing to answer. * * * Obviously, to join the trustee as a party, as a citizen of another state, at this time, when it cannot be served, would be to hazard the jurisdiction of the court to grant preliminary relief now sought."

It is undoubtedly true, as argued by counsel for defendants, and sustained by the abundant authority cited by them, that "when a decree will directly affect a person or his rights he must be a party to the proceeding, regardless of any question of estoppel." The rule in regard to the necessity for joinder of parties in suits in equity is stated by Chief Justice Marshall in Elmendorf v. Taylor, 10 Wheat. 167, 6 L. Ed. 289:

"In the exercise of its discretion, the court will require the plaintiff to do all in his power to bring every person concerned in interest before the court. But, if the case may be completely decided as between the litigant parties, the circumstance that an interest exists in some other person, whom the process of the court cannot reach, as if such party be a resident of some other state, ought not to prevent a decree upon its merits. It would be a misapplication of the rule to dismiss the plaintiff's bill because he has not done that which the law will not enable him to do."

See Shields v. Barrow, 17 How. 130, 15 L. Ed. 158.

In Barney v. Balto. City, 6 Wall. 280, 18 L. Ed. 825, Mr. Justice Miller says:

"The learning on the subject of parties to suits in chancery is copious, and within a limited extent the principles which govern their introduction are

Digitized by Google

flexible. There is a class of persons having such relations to the matter in controversy, merely formal or otherwise, that, while they may be called proper parties, the court will take no account of the omission to make them parties. There is another class of persons whose relations to the suit are such that, if their interest and their absence are brought formally to the attention of the court, it will require them to be made parties, if within its jurisdiction, before deciding the case. But, if this cannot be done, it will proceed to administer such relief as may be in its power between the parties before it. And there is a third class, whose interest in the subject-matter of the suit, and in the relief sought, are so bound up with that of the other parties, that their legal presence as parties to the proceeding is an absolute necessity, without which the court cannot proceed. In such cases the court refuses to entertain the suit, when these parties cannot be subjected to its jurisdiction."

It would seem that the instant case is within the second class. The plaintiff alleges that, by reason of the fraudulent and wrongful conduct of its majority stockholders and managing officers, the corporate property has been dissipated and its business prejudiced; that rights of action have accrued to the corporation against such officers. These transactions are set forth in the bill and admitted for the purposes of this discussion. The bill further charges that the president, directors, and secretary and treasurer, whose duty it is to prosecute such actions as may be necessary to protect the rights of the corporation, occupy in respect to such transactions antagonistic relations to the corporation and its rights. It so happens that the suit to redress the wrongs and enforce the rights of the corporation must be brought against those whose duty it is to bring and prosecute them to judgment. The plaintiffs bring the corporation and one of the managing officers before the court, and seek such relief as it may be in its power to grant. They challenge the power of the court to grant any relief, and demand that, in the face of the allegations in the bill, admitted to be true, the suit be dismissed because two other persons, also directors, who are beyond the jurisdiction of the court, are not made parties, and that if made parties, by reason of the place of their residence, the court would be without jurisdiction to proceed. Conceding that, without their presence, or the presence of Geo. L. Adams, full and complete relief in respect to one of the transactions of which complaint is made, cannot be granted, we do not perceive any valid reason why, with the corporation before the court, it may not proceed to investigate the truth of the allegations of the bill for the purpose of ascertaining whether any relief may be granted. If it shall appear that the corporation has sustained injury by the conduct of its officers, why may not a receiver be appointed, with direction to institute such suits in equity or actions at law as may be necessary to protect the interests and enforce the rights of the corporation? For that purpose we are of opinion the court has before it the essential necessary parties. The decree would not prejudice the right of the nonresident persons, in such actions, to deny and demand proof of the allegations against them. In dismissing the bill for nonjoinder of these parties there was error.

[4] Defendants suggest that, conceding the attack on the bill is not sustained, the court, by an examination of the answer, will learn that full and complete denials, sustained by exhibits attached, are

Digitized by Google

made, and that the decree, for that reason, should be affirmed. It is held that the motion to dismiss for nonjoinder of parties must be disposed of upon the allegations of the bill, without the aid of any allegations in the answer. Bogert v. Southern Pac. Co. (D. C.) 211 Fed. 776. By equity rule 29, demurrers and pleas are abolished; defenses must be made either by a motion to dismiss or by answer. In this case defendants answered, and depositions by defendants were taken. While it is within the discretion of the court to entertain a motion to dismiss for want of equity apparent upon the face of the bill, at any time before the hearing, the rule contemplates that it be made before the answer is filed:

"If the defendant move to dismiss the bill or any part thereof, the motion may be set down for hearing by either party upon five days' notice, and if it be denied, answer shall be filed within five days thereafter, or a decree *pro confesso* entered."

The defendant may not, by filing his answer, move to dismiss upon denials of the allegations of the bill, or by new matter set up in his answer. The motion must be heard and decided upon the allegations of the bill, as upon demurrer. The rule which prevails in courts of equity, in disposing of motions to dismiss because the bill does not set up facts sufficient to constitute a cause of action, is to overrule the motion, and let the case go to hearing, unless it is founded upon an absolutely clear proposition that, taking the allegations to be true, the bill must be dismissed at the hearing. Rallston Steel Car Co. v. Nat. Dump Car Co. (D. C.) 222 Fed. 590.

For the reasons stated, the decree dismissing the bill must be reversed, and the cause proceed to hearing.

Reversed.

(249 Fed. 548)

ROGERS v. HINCKLE.

(Circuit Court of Appeals, Fourth Circuit. February 4, 1918.)

No. 1574.

1. VENDOR AND PURCHASER ⟹70—OPTION TO PURCHASE—PRICE—CONSTRUCTION.

A contract between complainant and defendant, after its reformation by the court to conform to the actual agreement of the parties, gave complainant an option to purchase for $35,000 certain land and the personal property thereon, which entitled him also to the surrender of a mortgage for $5,000 on his own property held by defendant. The contract further provided that, in case defendant received a bona fide offer for the land acceptable to him before expiration of the option, complainant might purchase at the same price. Such an offer was received of $25,000 for the land and personal property, but having no reference to complainant's mortgage. Complainant tendered such amount and demanded a conveyance of the land and the surrender of the mortgage, and on defendant's refusal brought suit for specific performance. *Held* that, under the contract, his tender was insufficient, as the offer received by defendant was equivalent to one of $30,000 for the entire property covered by the contract, including the mortgage.

⟹For other cases see same topic & KEY-NUMBER in all Key-Numbered Digests & Indexes

Digitized by Google

2. SPECIFIC PERFORMANCE ⟹126(1)—PERSONS ENTITLED TO REMEDY.

Complainant's tender having been more than sufficient as the contract read before its reformation, and as defendant also prayed for affirmative relief, complainant, who paid a valuable consideration for the contract, was entitled to specific performance on payment of the sum found due by the court.

Cross-Appeals from the District Court of the United States for the Eastern District of South Carolina, at Charleston; Henry A. Middleton Smith, Judge.

Suit in equity by H. K. Rogers against E. E. Hinckle, as trustee. From the decree, both parties appeal. Affirmed.

The opinion of the District Judge was as follows:

The complaint in this case appears to have been originally filed in the court of common pleas for the county of Florence about the 6th of January, 1917. Thereafter, on the ground of diversity of citizenship, the cause was duly removed to this court. The defendant, having been duly served with process, has appeared and answered. The case, being at issue, came on to be heard. The testimony has been taken, and counsel for both plaintiff and defendant have been heard. The facts of the case appear to be that the plaintiff, H. K. Rogers, was heavily indebted upon certain mortgages to J. F. Muldrow and Mrs. Emma Lee Muldrow. He seems to have purchased from them, or one of them, three tracts of land in Florence county (the largest tract being a tract partly in Florence and partly in Darlington county), for which he agreed to pay the sum of $40,000. He seems to have paid no cash, but paid the $40,000 by three bonds secured by mortgages: One bond dated December 16, 1912, conditioned for the payment of $20,000 to J. F. Muldrow, secured by a mortgage of 585 acres, partly in Florence and partly in Darlington counties, with certain personal property; one bond of the same date to Emma Lee Muldrow, conditioned for the payment of $15,000, secured by a mortgage upon two tracts of land in Florence county, one tract containing 173 acres and the other tract containing 10.36 acres. These two bonds together made $35,000, and the other $5,000 he paid by a bond of the same date for $5,000 to J. F. Muldrow secured by a mortgage on 143 acres of land in Darlington county, sometimes referred to as the home place of H. K. Rogers. It will be seen, therefore, that the property purchased by H. K. Rogers comprised three tracts of land, of 585 acres, 173 acres, and 10.36 acres, for which, with the personal property referred to in the mortgage, he agreed to give the price of $40,000, and which $40,000 was paid by a mortgage of $35,000 on the purchased premises, and a mortgage for $5,000 on a separate piece of property in the county of Darlington, which belonged to Rogers personally, and which he did not purchase from Muldrow. For convenience hereafter in this decree this last property, which belonged to Rogers personally, will be referred to as the Darlington property, and the other three pieces of property, which were purchased from J. F. Muldrow and Emma Lee Muldrow, will be referred to as the Florence property, although the largest of the three pieces is also partly in Darlington county.

These mortgages were all on the 8th day of January, 1913, assigned by the Muldrows to one John Kuker. Thereafter a concern called J. F. Muldrow Company became bankrupt, and in pursuance of some settlement of the indebtedness of the Muldrows, either directly or through the said J. F. Muldrow Company, these three mortgages given by H. K. Rogers to J. F. Muldrow and Emma Lee Muldrow were assigned to the defendant, E. E. Hinckle, as trustee for certain creditors, subject to the prior assignments made to John Kuker. E. E. Hinckle thus owning as trustee all the three mortgages, negotiations were had between himself and the plaintiff, H. K. Rogers, to put the matter in a shape which might obviate the necessity and expense of a foreclosure, and after the negotiations an agreement was entered into, on or about the 7th day of January, 1916, to the effect that H. K. Rogers would convey to

Digitized by Google

E. E. Hinckle, as trustee, the three tracts of land, with the personal property thereon, so as to vest the title to the property absolutely in E. E. Hinckle, subject only to the payment of the prior mortgages assigned to John Kuker, and then that Hinckle would agree that the property might be repurchased by H. K. Rogers for the sum of $35,000, and that, if Rogers paid the sum of $35,000, which was $5,000 less than he owed on his three mortgages, he would receive the property in Florence county and also have his outstanding mortgage on the property in Darlington satisfied and the mortgage returned to him; it being distinctly understood that the agreement was to the effect that he was to get a concession of $5,000 on his purchase price—that is to say, in lieu of paying $40,000, he was to pay *only* $35,000, and thereupon have the Florence property and his original own individual property in Darlington free from mortgage.

In pursuance of this agreement Rogers on the 7th day of January, 1916, executed a deed of conveyance to E. E. Hinckle of the three tracts of land in Florence county, purporting to be for the sum of $35,000, and in the conveyance declared that the property conveyed was subject to the mortgages given to secure an indebtedness which was then larger in amount than the consideration stated, to wit, $35,000, which mortgages were to be kept open as muniments of title. On the same day, January 7, 1916, Hinckle, as trustee, executed a lease to Rogers of all the three tracts of land in Florence county, with the personal property, to run as to the 31st of December, 1918, for the annual rent of $2,250, to be paid on the 15th of October in each year; and on the same day Hinckle executed an agreement in writing that in consideration of the conveyance to him of the property by Rogers and of the lease of the same from him by Rogers he granted to Rogers the right and privilege of purchasing the three tracts in Florence county and the personal property leased "at such price and on such terms as shall be acceptable to me and offered by a bona fide purchaser therefor at any time previous to the 1st day of October, 1918," or "if no such bona fide offer shall be made for the purchase of the property during the period mentioned, then at and for the sum of thirty-five hundred dollars ($3,500.00)." The agreement further stipulated that Hinckle would within the time above mentioned, on demand of Rogers, convey to him the three described tracts free of incumbrances upon Rogers complying with the terms of the option by the payment of the stipulated purchase price. No mention is made in this agreement or option as written of the tract of land in Darlington county or the mortgage for $5,000 thereon. Thereafter, on or about the 15th of December, 1916, one D. T. McKeithan, a bona fide purchaser, made an offer to Hinckle to buy the three tracts land in Florence county with the personal property thereon included in the lease, for the sum of $25,000. Nothing in this offer covered or referred to the mortgage for $5,000 on the Darlington property held by Hinckle by assignment from Kuker; so that the effect of McKeithan's offer was to pay Hinckle $25,000 for the Florence tracts and personal property and leave Hinckle still holding the $5,000 mortgage on the Darlington property. McKeithan was informed by Hinckle that, under the latter's agreement with Rogers, Rogers was entitled to the privilege of first making the purchase at the price offered. On the submission of this offer to Rogers he purported to accept and then required that on the payment by him of $25,000 Hinckle should execute to him a conveyance of the three tracts of land in Florence county free of all incumbrances and at the same time deliver to him duly satisfied the $5,000 mortgage on the Darlington property.

This Hinckle declined to do, and thereupon H. K. Rogers instituted these proceedings, first, to have the option or agreement of 7th January, 1917, reformed and corrected, by therein distinctly stating that upon Rogers complying with the terms of the option the outstanding mortgage for $5,000 on the Darlington property should also be delivered to him by Hinckle duly satisfied; and, second, for a specific performance of the option so reformed, by requiring Hinckle on the payment of $25,000 to convey to Rogers the three tracts with the personal property in Florence county free from all incumbrances and also to deliver to him fully satisfied his mortgage for $5,000 on the tract in Darlington county.

Digitized by Google

The defendant by his answer denies that the option or agreement of January 7, 1917, ever covered or was intended to cover the mortgage for $5,000 on the Darlington property, and denies that defendant ever agreed that, if Rogers complied with the terms of that option, that mortgage would be paid and delivered up to him. The defendant further, by way of a counterclaim for affirmative relief, sets up the mortgage for $5,000 on the Darlington property and prays a foreclosure and sale of it.

[1] The first question to be determined under the pleadings is as to whether or not the option or agreement of the 7th of January, 1916, should be reformed and corrected. After hearing all the testimony the court is satisfied that this option or agreement as written failed to correctly express the agreement or understanding of the parties in two particulars: First, in that the words thirty-five hundred dollars as the price to be paid by Rogers was evidently a mistake or typographical error and that it should read thirty-five thousand dollars. Next, under the testimony and admissions of defendant it clearly appears that the understanding and agreement of the parties was that Rogers should have a concession of $5,000 on the price of $40,000 at which to repurchase the property, and that if he paid the $35,000, or if he paid such a price as should be acceptable to Hinckle, and offered by a bona fide purchaser at any time previous to the 1st day of October, 1918, the mortgage for $5,000 on his Darlington property was to be part of the property purchased or acquired by the payment of the purchase price; otherwise, he could not have been sure of obtaining the concession of $5,000.

It is therefore ordered, adjudged, and decreed that the option or agreement herein executed by E. E. Hinckle, trustee, on the 7th day of January, 1916 (according to the instrument put in evidence in this case), be and the same is hereby reformed and corrected as follows: First, by striking out the words "thirty-five hundred dollars ($3,500.00)" in letters and figures on the line next above the last line of the first page, and inserting in lieu thereof "thirty-five thousand ($35,000.00) dollars"; second, by inserting between the words "deed" and "upon," in the third line of the second page the following words: "And to deliver up to him the mortgage for $5,000 on the 143 acres in Darlington county duly satisfied."

[2] The next question is: Is the plaintiff entitled in these proceedings to a specific performance of this option or contract as reformed? The plaintiff's construction of the contract is that, the offer made by McKeithan as a bona fide purchaser being $25,000, he, the plaintiff, was entitled, on payment of the same amount, to have a conveyance of the three tracts of land and personal property in Florence county free of incumbrances, and also to have the mortgage for $5,000 satisfied upon the Darlington property. This construction and claim of the plaintiff is, however, in effect $5,000 less than the offer made by McKeithan, and, if allowed, would result in Rogers obtaining, not only the concession of $5,000 on his original purchase price of $40,000, but of obtaining a concession of $15,000 on that purchase price, for he would thus obtain for $25,000 what he had originally agreed to pay $40,000 for. In the opinion of the court Rogers is not entitled to specific performance upon any such construction of the contract as contended by him. The offer purporting to be accepted by Rogers is not the offer made by McKeithan. The offer made by McKeithan was $25,000 for the three tracts of land in Florence and the personal property alone, and this left Hinckle free to hold and enforce his mortgage for $5,000 on the Darlington property, and therefore, in effect, the offer of McKeithan was $30,000, and not $25,000. This would have given Rogers a concession of $10,000, or $5,000 more than he was entitled to by his own understanding of the agreement. Yet Rogers' attempt is to obtain a concession of $15,000, on the ground that his tender of the $25,000, being the amount offered by McKeithan for a part of the property, should, under the wording of the option, cover the whole of the property therein mentioned, and entitle Rogers, not only to that property that McKeithan was to get, but to the $5,000 mortgage. This the court finds that he is not entitled to; that the true option was to allow him to acquire the property, including his $5,000 mortgage, only by an offer and a payment equivalent to the bona fide offer received by Hinckle. This he has failed to comply with.

Digitized by Google

The plaintiff, however, submits to the court that, if the court reforms the agreement, he should be allowed, on compliance with the agreement in accordance with the construction of the contract now made by the court, to require specific performance on the part of Hinckle; that is to say, that if Rogers will now pay the sum of $25,000, with interest from the date of tender, say the 16th day of December, 1916, and will recognize as valid and outstanding the mortgage upon his property in Darlington, and leave Hinckle free to foreclose or enforce it, he should have specific performance of the contract. The defendant insists that Rogers is not entitled at this stage to any such decree; that he is not entitled to a specific performance until he should have tendered the amount, the full payment under the option; and that, having been notified of the offer made by McKeithan and having failed to tender an amount equal to it, he has lost his right to a specific performance. The agreement or option in the present case and under all the circumstances is not one in which time would so appear to be of the essence of the contract as to defeat the right of the court to relieve against a forfeiture. It does not appear that the rights of any third parties have intervened, such as would make it inequitable to allow Rogers the opportunity now to comply with his option. One of the earliest acts of the Court of Chancery, in a case of mortgage by way of conditional sale, was to refuse to allow the forfeiture, but to decree a time for redemption, under what was called the equity of redemption. This present option is not dissimilar, and if the court could relieve upon the positive terms of a sale under which the title became absolute in the mortgagee upon the failure of the mortgagors to perform, it can certainly relieve under the circumstances of the present agreement.

It is to be borne in mind that this agreement is not a mere option, but an express understanding for valuable consideration, and that Rogers has already executed his entire part of it. He was under no obligation to execute the conveyance of the land to Hinckle, thus yielding up his equity of redemption; yet he did so. He conveyed to Hinckle his title to the land, which would, if he had retained, have insured him an opportunity to exercise his equity of redemption under any proceedings for foreclosure. He also accepted a lease of the property, which is expressly made one of the considerations for the option. This lease seems to have secured under the name of rent what in effect paid the interest on the price of $35,000. And, furthermore, the defendant himself does not stand on the option as written, for it is necessary to reform the option also to protect the defendant Hinckle. If the option was in force as it read for $3,500 only, and not $35,000, the tender made by Rogers would have been ample to cover all his obligations. It is not a case in which counter equities should be overlooked. Both plaintiff and defendant have come into court, setting up and seeking affirmative equitable relief. The maxim. "He who seeks equity must do equity," is as appropriate to the conduct of the defendant as that of the complainant. Brown v. Lake Superior Iron Co., 134 U. S. 535, 10 Sup. Ct. 604, 33 L. Ed. 1021. Rogers has already parted with all the consideration he was to give for the option. The defendant, having received it, is not discharged on his part by the mere signing of the option; he must perform its stipulations as required by its terms in the same conformity to equity as is required of the complainant.

It is therefore ordered, adjudged, and decreed that the plaintiff, H. K. Rogers, do, within 30 days from the date of this decree, pay to the defendant, E. E. Hinckle, trustee, the sum of $25,000, with interest thereon at the rate of 7 per cent. per annum from the 16th day of December, 1916, together with the sum of $5,350, with interest thereon at the rate of 7 per cent. from the 8th day of February, 1916, together with the sum of $250, which is allowed by this court as a reasonable counsel fee to be paid under the terms of the mortgage for the recovery of the said sum of $5,350, with interest in these proceedings, and that upon the payment of all the same the defendant, E. E. Hinckle, as trustee, do execute and deliver contemporaneously with such payment to the plaintiff, H. K. Rogers, a deed of conveyance in good and sufficient form of all the three tracts of land in Florence and Darlington counties described in the agreement or option contract of the 7th of January, 1916, free of incumbrances, with all the other property that day leased to said H. K.

Digitized by Google

Rogers, which shall be on hand at the time of compliance by the said H. K. Rogers with this decree, and do at the same time deliver up to the said H. K. Rogers his bond and mortgage to J. F. Muldrow, dated the 16th day of December, 1912, to secure the sum of $5,000, on the tract of land in Darlington county containing 143 acres, duly satisfied in form to have such satisfaction duly recorded on the record of the said mortgage.

It is further ordered and decreed that on the failure of the plaintiff to comply with this decree by the payment of the sums above mentioned within the time limited he shall be debarred of any further right, title, or privilege in and to the lands and premises described in the option or agreement dated January 7, 1916, and of any right, title, or privilege under said agreement, and that the defendant may apply to this court for an order of foreclosure and sale of the 143 acres in Darlington county, or for such other decree to enable him to foreclose and realize thereon as may be meet and proper. It is further ordered that the cost of these proceedings to the date of this decree, including the entry thereof, shall be divided; each party paying his own costs where the same are severable, and one-half where the costs are incurred in the cause generally.

W. F. Stevenson, of Cheraw, S. C., for appellant and cross-appellee.

Henry E. Davis, of Florence, S. C. (Willcox & Willcox, of Florence, S. C., on the brief), for appellee and cross-appellant.

Before PRITCHARD, KNAPP, and WOODS, Circuit Judges.

PER CURIAM. We are satisfied with the disposition of this case by the court below, and find no occasion to add anything to the views expressed in the opinion of the learned District Judge.

The decree is accordingly affirmed.

(249 Fed. 553)

REID v. SHAFFER.

(Circuit Court of Appeals, Sixth Circuit. March 6, 1918.)

No. 2872.

1. CANCELLATION OF INSTRUMENTS ⟹58—INCIDENTAL RELIEF.

Equity having jurisdiction of a suit to cancel a contract between complainant and defendant, giving defendant a percentage of the profits which were expected to result from complainant's acquisition of a leasehold, in which transaction defendant was interested, on the ground that defendant concealed a profit received from the owner, may, for the purpose of doing complete justice between the parties, decree a recovery of the sum concealed by defendant.

2. PRINCIPAL AND AGENT ⟹48—DUTY OF AGENT.

Absolute faithfulness and loyalty are required of an agent in whom confidence is placed, and personal benefit to him secretly obtained is incompatible with relation to agency.

3. FRAUD ⟹11(2)—MISREPRESENTATIONS—OPINION.

Where defendant, when he interested complainant in the acquisition of a leasehold, stated that it could be obtained for $60,000, but when the negotiations were actually entered into the owner demanded $65,000, defendant's statements concerning the $60,000 were a mere expression of opinion only.

4. PARTNERSHIP ⟹5—RELATION—INTENTION.

The relation of the parties is determined by their intention, and mere participation in profits will not alone establish a partnership.

⟹For other cases see same topic & KEY-NUMBER in all Key-Numbered Digests & Indexes

Digitized by Google

5. CONTRACTS ⟹147(3)—CONSTRUCTION.
In construing a contract, the intent of the parties is to be gathered from the entire contract and all the circumstances of the case.

6. JOINT ADVENTURES ⟹4(1)—GOOD FAITH—DUTY OF ASSOCIATES.
Where parties engage in a common enterprise by way of joint adventure, each has the right to demand and expect from his associates good faith in all that relates to their common interests.

7. JOINT ADVENTURES ⟹1, 4(1)—WHAT ARE—CONCEALMENT OF PROFITS.
Defendant interested complainant in the acquisition of a leasehold, stating that it could be bought for $60,000. The owner, who was selling the lease, to buy out his partners in the dry goods business, demanded $65,000. Complainant, after an independent investigation, agreed to pay the amount demanded, and he and defendant entered into a contract providing that for compensation for his services defendant should receive a certain percentage of the expected profits of the transaction. When the transaction was closed the owner was able to buy out his associates for $60,000, instead of $65,000, as he expected, and on defendant's demand the owner paid him the extra $5,000, which profit defendant concealed. *Held*, that the parties, regardless of the form of the contract, were joint adventurers, there being no sharing in the losses, so as to make them partners, and, while defendant was bound to exercise good faith towards complainant and to account for the profits, his concealment of the profit under the circumstances, as it was unexpected, should not work a forfeiture of his rights in the whole enterprise.

8. JOINT ADVENTURES ⟹5(1)—ACTIONS BETWEEN ASSOCIATES—REMEDY.
While assumpsit is the proper remedy for the recovery of a liquidated sum withheld by one joint adventurer from his associates in the transaction, recourse may be had to equity, where the amount is unliquidated and there is also a prayer for cancellation of the written contract between the parties relating to the transaction.

Appeal from the District Court of the United States for the Eastern District of Michigan; Arthur J. Tuttle, Judge.

Suit by Charles B. Shaffer against George F. W. Reid. From a decree for complainant, defendant appeals. Reversed, with directions.

R. M. Brownson, of Detroit, Mich. (Alex. J. G. Groesbeck, of Detroit, Mich., of counsel), for appellant.

Hal. H. Smith and Leo M. Butzel, both of Detroit, Mich., and Henry A. Gardner, of Chicago, Ill., for appellee.

Before WARRINGTON and DENISON, Circuit Judges, and HOLLISTER, District Judge.

HOLLISTER, District Judge. Burns-Hickey Company, a corporation engaged at Detroit in the dry goods business, Burns and Hickey each owning half of the common stock, and Navin and Mullin owning the preferred stock, had a lease from the Ferguson estate on the premises in Detroit in which it carried on its business, running for 25 years from August 17, 1912, at $25,000 a year. Burns, the president, and Hickey disagreed and the stockholders authorized, and caused to be advertised, a sale of the assets, including the lease.

Reid, the appellant, for many years connected with Bradstreet's Mercantile Agency and at the time and for a number of years their representative at Detroit, knew Burns and of his business troubles and

Digitized by Google

of the intended sale. Burns had several offers for the lease, one at $75,000, one at $80,000, and one at $100,000, which apparently failed only because of technical objections raised by the prospective purchaser's lawyer. The lease was of great value, the property being situated in that part of Detroit which at that time commanded large rentals constantly and rapidly increasing in amount.

Shaffer, the appellee, was a capitalist of Chicago, having apparently much ready money, with whom Reid had become acquainted through an investment of Shaffer's in Detroit. Burns wished to get rid of the other stockholders and to continue the business himself. He had practically no money, but he devised a plan for the sale of the lease, which contemplated a payment of sufficient cash by the purchaser to buy out the other stockholders, and, after the assignment of the lease to the purchaser, a re-lease from him for the balance of its term. Hickey offered to sell for $20,000. The sale of the assets was proceeding at a loss, and it is probable Burns at first thought that each of the interests of Navin and Mullin could be had at the same figure, for Navin told Burns he would take what the others did. Burns did not then know what Mullin would take.

Reid at first determined to buy the lease himself. Not having the ready money, he tried to borrow it and tried to interest others. Failing, he thought of Shaffer, and got in touch with him through Shaffer's brother, Harry, who was connected with Shaffer's Detroit business. Shaffer and his attorney, Gardner, came from Chicago to Detroit, and on March 12, 1913, paid $65,000 to Burns. Shaffer took an assignment of the Burns-Hickey lease and executed on that day a new lease to Burns-Hickey Company and Burns of the same premises at a rental of $35,000 a year for the first 12 years and for the remaining 12 years, 5 months and 16 days of the lease $40,000 a year. On the same day, Shaffer and Reid entered into a contract wherein it was recited:

> "Whereas, George F. W. Reid, acting for the said Charles B. Shaffer, has carried on all the negotiations looking to the purchase of the lease of said property, and the re-leasing of the same; and whereas, the parties hereto are desirous of settling the compensation to be paid by the said Charles B. Shaffer to the said George F. W. Reid for his services and arranging for the payment of the same"

—and in consideration of these witnessed, among other things, that Reid was to have $2,000 per year net after Shaffer had received from rentals $65,000, with 6 per cent. interest, and agreed "to accept said payment as hereinbefore stipulated in full payment for his commissions and services rendered to" Shaffer. It was provided further that, in case the premises should be vacated, Reid should be given "the first opportunity of negotiating a lease of said premises for thirty-five thousand ($35,000) dollars or better"; that in case the premises should be leased for less than $35,000 then his payment under the contract should be prorated, and in default by Burns-Hickey Company in payment of rent the $2,000 would be suspended until the premises were leased to other parties.

On the same day Burns paid his associates $20,000 each, totaling

Digitized by Google

$60,000, and on the next day, March 13, he gave two checks to Reid, each for $2,500, one dated March 13 and the other March 17. The payee was not named. Reid put in his own name, indorsed the checks, and drew the money in cash from the bank on which they were drawn. He had an account at that bank. In a later transaction, Shaffer found out that Reid had received these checks. Thereupon he brought this suit against Reid to recover $5,000 and for a cancellation of his contract with Reid, on the alleged ground that Reid was his confidential agent in the transaction, upon whom, and upon whose representation that the cash required was no less than $65,000, he relied—praying that Reid account to him for the $5,000, that the contract be canceled, and Reid enjoined from prosecuting any suit on it.

The trial court found the action to have been properly brought in equity, that Reid deceived Shaffer as to the amount of cash necessary for the deal, had acted in the dual capacity of confidential agent for both Shaffer and Burns in the same transaction, and, while so acting, improperly received compensation from each for his services. The prayer was granted. All of the errors assigned either cover these two findings, or attack the findings and final decree on the ground that they are contrary to the evidence and without sufficient evidence to support them.

[1] We think the equity jurisdiction of the court was properly invoked. The action was to cancel a written contract continuing in nature, which, by its terms, gave Reid certain control in obtaining new tenants in the event the property became vacant. Shaffer was not required to await Reid's pleasure in bringing a suit, and his remedy was fuller, more complete, and more adequate by an action in equity to cancel the contract, and, thus obtaining jurisdiction, to obtain, if justly he should have it, a decree in one suit canceling the contract, and incidentally, in doing complete justice between the parties, to obtain a recovery of the money. Simpkins' Federal Equity Suit (2d Ed.) pp. 22, 23, 24; Bank of Kentucky v. Stone (C. C.) 88 Fed. 383, 391; Schmidt v. West (C. C.) 104 Fed. 272, 274; Mutual Life Ins. Co. v. Pearson (C. C.) 114 Fed. 395, 397; 2 Story's Eq. Jur. (13th Ed.) art. 700; Boyce v. Grundy, 3 Pet. *210, *215, 7 L. Ed. 655; Sullivan v. Railroad Co., 94 U. S. 806, 811, 24 L. Ed. 324.

[2] On the facts so stated, and in view of the rule of agency that when one authorizes another to act for him and in his stead, relying upon him and on his judgment and discretion, absolute faithfulness and loyalty are required of him in whom the confidence is placed, and personal benefit to him secretly obtained is incompatible with the relation between the parties (Mechem on Agency [5th Ed.] §§ 178, 1588, 1589, 1590), no attack on the decree could successfully be made. But the facts stated are but the skeleton of the case, the complete structure of which only appears when all the facts, circumstances, and necessary inferences are disclosed.

[3-7] On Reid's initiative, through Harry Shaffer, he and Shaffer met and discussed the purchase of the lease. In that conversation there is no doubt that Reid, in speaking of the amount of cash involved, said something about $60,000, and indicated his plan that he and

Digitized by Google

Shaffer should share the profits equally. Shortly thereafter Reid, on March 4, 1913, wrote a letter to Shaffer at Chicago, in which he set forth the advantages of Burns' lease, and Burns' intention to buy out the interests of the other stockholders from the money received for the lease. The letter proceeds:

"The net cost of the lease to you is $65,000, and he will in turn pay you $32,500 per annum for the first ten years, plus 5 per cent., and for the next fifteen years he will pay you an annual rental of $35,000, and will in turn assign to you the subleases as they are made and this will be net to you. The way I figure is this: That it will take between eight and nine years to pay you back the entire $65,000, together with interest at 5 per cent; after that time the excess over the $25,000 will be divided equally."

He said men of ability who knew the conditions in Detroit were all of opinion—

"that this is a very excellent proposition so far as we are concerned and cannot see any chance whatever for any loss. * * * I am convinced that this is a good proposition, and I only wish I, personally, were in possession of this amount of money, as I would be very glad to invest my own funds in same if I had it. * * * You can depend upon me to protect your interests at all times, and will say that this is right in my line, for the reason that I own a number of pieces of real estate in Detroit and have made a very close study of the conditions here, and in this proposition I know that I am right, and that there is no chance whatever for you to lose, but, on the contrary, will make a large sum of money."

Shaffer's Chicago lawyer, Gardner, after reading the letter, was requested by Shaffer to go to Detroit and determine whether the proposition was a good one in his opinion. Gardner came to Detroit and met a number of important persons acquainted with real estate values. He talked with Reid, who took him to see Burns. Gardner testified:

"Burns said it was a very good deal; that he had an offer at that time of $75,000 cash for his leasehold, but that he was anxious to go on with the business, and he would rather sell his leasehold for $65,000 and get a lease back than sell it for $75,000."

Gardner reported to Shaffer favorably. After hearing Gardner's report, Shaffer, seeing the opportunity for greater profit, wrote Reid (March 7) that his attorney had submitted his report and that after thinking the matter over he determined to make the following offer—

"which you may submit to Burns: I will pay $65,000 cash for an assignment by the present lessees of the lease from the Ferguson estate. I will then execute a sublease to Burns on the following terms: $35,000 per year for 12½ years, and $40,000 per year for the balance of the term. * * * If this proposition is satisfactory, send me a copy of the original lease at once. My attorney will prepare a lease from me to Burns and will submit it to him for approval. * * * Of course, there may be certain minor details to consider; but we can settle them when the papers are prepared."

It thus appears that Reid's proposition to Shaffer was not accepted, and Shaffer's counter proposition not only contained a material increase in the rental ($50,000) but left the way open for him to obtain, as he did obtain when the transaction was carried through, 6 per cent. on his $65,000 before anything was paid to Reid, instead of 5 per cent.

Digitized by Google

Burns objected to the increased rental. Reid wrote to Shaffer March 10, 1913:

"When I proposed the increase in rental to Mr. Burns, he at first felt that we were pressing him pretty hard, but after explaining it to him, and talking the matter over with him, I proved to him that the proposition was a fair one, inasmuch as, at the end of 12 years, he would share in the benefits of the increased value of the property and could well afford to pay that rental. He finally consented. It is my judgment, however, that after a conference between all of us on Wednesday that every detail can be arranged satisfactorily to all concerned."

Burns accepted, but not until after his friend Clark of the First National Bank advised him to do so. Shaffer's proposition of $65,000 in cash and larger rentals was made with absolutely no reliance upon Reid, or anything he had said. Even if it were true that Reid had at first said positively that the cash involved was $60,000, that representation was not the inducing cause of Shaffer's entering into the transaction. However, after full independent investigation, Shaffer fixed the figure at $65,000 himself, as the cash he was willing to pay. In fact, Reid did not know, and could not have known, that Mullin would take $20,000 for his stock. Burns did not know, nor could he have known, that fact, for Mullin was demanding $25,000, and was not willing to take less until the very day the transaction was closed. Burns then brought him to terms by telling him that, unless he took $20,000, the whole deal would fall through.

The record does not disclose when, if at all, Reid learned of Mullin's demand. Notwithstanding Shaffer's testimony as to the positive quality of Reid's statement (denied by Reid), Harry Shaffer's testimony, on cross-examination, that Reid said he "thought" the stockholders would sell for $60,000, must be taken as true, because, if for no other reason, it alone comports with reason and probability. That Shaffer honestly thought the original figure was $60,000 is shown by his letter of March 5 to his brother, Harry, the day after receiving Reid's letter. He says, among other things:

"It shows that I am obligating myself, not only to pay the $65,000, but, in addition, $25,000 a year for 25 years, which changes this thing very materially. As I understood it from the conversation in Mr. Reid's office, when I put up this $60,000 then, but $65,000 now, that was the extent of my liabilities. * * * However, rather than to disappoint you and Mr. Reid, if, on examination by my lawyer, he finds it a fairly safe investment, I will put up the money on this condition: After I get my money back, which will take about 8½ years, there will be an income of $10,000 a year. I will take $6,000 of this, and you and Mr. Reid split the other $4,000. You dug up the dough; consequently you are entitled to half of the commission with Mr. Reid. That would be my way of looking at it, and I think Mr. Reid will be perfectly agreeable that you should have it."

Whatever was said about the $60,000 was nothing more, and could have been nothing more, than a tentative suggestion of the probable amount of cash the transaction would require. It was the expression of an opinion only. Southern Development Co. v. Silva, 125 U. S. 247, 256, 8 Sup. Ct. 881, 31 L. Ed. 678. Reid took Burns' proposition of $65,000 and certain rentals to Shaffer. Burns made the price, not Reid. Shaffer was in Chicago; Burns in Detroit. Shaffer sent back

Digitized by Google

a counter proposition for submission to Burns. The terms were made by Shaffer, not Reid. Reid gave his opinion to Shaffer on the value of Burns' offer; but it was not that which influenced Shaffer. He relied on Gardner. Reid tried to bring Burns up to Shaffer's offer, but Burns did not rely on him in accepting it. He relied on Clark. We are unable to see how, under these circumstances, he was the confidential agent of either Shaffer or Burns, on whose judgment and discretion they or either of them relied.

But it is said by Shaffer that Reid told him $65,000 was the least Burns "could buy his partners out for." Just when and where that was said, if it was said, does not clearly appear. But, assuming that Reid said so and that it is material, the facts show the statement to be substantially true. Burns testified positively and repeatedly that he never offered the lease to Reid, or anybody else, at less than $65,000. Why Burns put this figure at $65,000 is easy to understand. Hickey would sell for $20,000; Navin had said he would take what the others took; but Mullin was insisting on $25,000. This makes $65,000. In one aspect, if Navin would require what Mullin was willing to take, $70,000 would be needed. It may be that Burns' necessities were such, including his desire to get rid of the other stockholders and run the business himself, that, as he says, he might have taken less than $65,000. He could not say. That he might have done so is mere speculation. This we regard as unimportant, for the price he fixed was his own, never deviated from, and was a figure prudence and apparent necessity required. Shaffer knew what the money was needed for, and neither Burns nor Reid knew, nor could have known, but that the amount necessary was at least $65,000.

We are unable to see anything in the relation between Reid and Shaffer, under the circumstances disclosed, which imposed a duty on Reid to Shaffer to try to get Burns to throw off a part of the cash the stockholders were demanding. If it is suggested that Reid is estopped to deny an agency by the offer in his letter to look after Shaffer's interest and by the language of the contract, it may be said that the offer was declined by Shaffer, and in any event was made after the cash price was fixed, and really had to do with matters subsequent to the purchase. What relation, in legal contemplation, is established in the infinite variety of men's dealings with each other, is sometimes a matter of exceedingly careful discrimination. Reid's lawyer, McKay, with whom Reid and Gardner consulted briefly, dictated the contract in their presence; but it is not probable that the use of the words "negotiations" and "commission" and "compensation" were intended, through any technical meaning they bear, to give a character to the contract different from the relation the testimony and the contract show the parties bore to each other.

The relation Reid sustained to Shaffer was quite different from agency within the meaning of the rule. From the beginning Reid insistently and repeatedly demanded of Shaffer one-half of the profits after Shaffer got his money back and interest. The profits were all rentals over the $25,000 a year Shaffer must pay as assignee of the original lease. Shaffer and Harry understood Reid's claim perfectly.

Digitized by Google

Harry, who had introduced Reid to his brother, and who was accustomed to receive 25 per cent. of the profits of deals in which he introduced his brother as the financial man, was demanding one-half of Reid's share of the profits. The matter was never settled until the day the transaction was closed, and afterwards, as nearly as may be gathered from the record, Shaffer held the whip hand and required Reid to agree to Harry's participation with Reid in equal shares. Reid was compelled to come to Shaffer's terms. These were based on rentals fixed by Burns in the original proposition brought to Shaffer. Those terms showed a profit, figuring not too exactly, of about $10,000 a year. Even this Shaffer was not willing, as the contract shows, to divide on the percentage of 50 per cent. to himself and 25 per cent. each to Reid and Harry. But the division he was willing to make, and did make, was 20 per cent. for each of the others. The $2,000 to Reid in the contract is that 20 per cent.

It will be noticed, however, that at the increased rentals required by Shaffer, and obtained by him, the annual profit would be something between $12,000 and $13,000, resulting in Shaffer's obtaining considerably over 60 per cent. and Reid and Harry considerably less than 20 per cent. But the circumstances and the contract itself show that the basis on which Shaffer and Reid were dealing was a division of the profits. It is true Reid's share was a fixed sum, but it was nevertheless a share in the profits, because he had not dealt with Shaffer on any other basis during the whole transaction, and the contract itself shows that if the rate of rental were reduced to less than $35,000 Reid must suffer proportional abatement, and if Shaffer's lessee defaulted in the rent Reid would get nothing.

Reid was not Shaffer's agent, nor was he his partner. The relation of the parties to each other is determined by their intention. Berthold v. Goldsmith, 24 How. 536, 542, 16 L. Ed. 762; Beecher v. Bush, 45 Mich. 188, 204, 7 N. W. 785, 40 Am. Rep. 465. It was said by Mr. Justice Harlan in London Assurance Co. v. Drennen, 116 U. S. 461, 472, 6 Sup. Ct. 442, 444 (29 L. Ed. 688):

> "Mere participation in profits would give no such interest contrary to the real intention of the parties. Persons cannot be made to assume the relation of partners, as between themselves, when their purpose is that no [such] partnership shall exist. There is no reason why they may not enter into an agreement whereby one of them shall participate in the profits arising from the management of particular property without his becoming a partner with the others, or without his acquiring an interest in the property itself, so as to effect a change of title."
>
> "The real test of partnership," says Judge Ward, "is whether the parties are jointly interested as principals and may bind each other by their acts or engagements within the scope of the enterprise." Keith v. Kellermann (C. C.) 169 Fed. 196, 199.

It is immaterial that the words "commission," "compensation," "negotiations," etc., are used, for the intention of the parties is to be gathered from the entire contract and all the circumstances of the case. It was said by Judge Cooley in Beecher v. Bush, 45 Mich. 188, 194, 7 N. W. 785, 40 Am. Rep. 465, citing Chancellor Kent in Post v. Kimberly, 9 Johns. (N. Y.) 470, 504:

Digitized by Google

"The law must declare what is the legal import of their agreements, and names go for nothing when the substance of the arrangement shows them to be inapplicable."

The circumstances will not stand the tests which determine agency or the partnership relation, and yet Reid's relation to Shaffer required good faith. Reid may be described as a "quasi partner," responsible to Shaffer for losses sustained by misconduct or misapplication of the funds, who owes with respect thereto the same duties and obligations as would exist if the parties had been partners in fact and law. Marston v. Gould, 69 N. Y. 220, 225. The enterprise was a joint adventure. The subject is dealt with at some length in Jackson v. Hooper, 76 N. J. Eq. 185, 197, 74 Atl. 130 (27 L. R. A. [N. S.] 658), wherein the headnote aptly states the opinion of the court:

"A 'joint adventure' may exist where persons embark in an undertaking without entering on the prosecution of the business as partners strictly, but engage in a common enterprise for their mutual benefit; they each have the right to demand and expect from their associates good faith in all that relates to their common interests."

Shaffer claims the $5,000 as his own, since it was a part of his $65,000; but it was not his. The money belonged to Burns, who made it when he forced Navin to abate his price in that amount, and we see no reason, as between them, why Burns should not have given it to Reid if he wished to do so. But, as between Reid and Shaffer, good faith required that Reid should inform Shaffer of the receipt of the money. The understanding for a division of profits necessarily meant all profits. The division on the basis of profits required that both parties should know what all the profits were.

It would not be useful to discuss at length the respective theories of Burns and Reid upon which the payment was made. Some of their explanations have elements of plausibility, and some are altogether futile; but it is quite clear that, for some reason, Reid did not wish it known he had received the money. On our theory of the case the reason was that Reid appreciated his relation to Shaffer, and was willing to, and did, secretly appropriate an unexpected profit which belonged to both parties. Equity requires that Reid account to Shaffer for that money. On such accounting, a part of it would belong to Reid; but just what part, under the terms of the contract, it would be impossible now to determine. The money should be paid to Shaffer. Such payment will accelerate the time when Reid's receipts are to begin, and thereby lengthen the time during which he will participate; but that participation will include the $5,000 in the ratio that $2,000 a year bears to the total profit of that year.

Since what Reid was to get was not "commissions," as upon an agency, or "compensation" for services rendered, whatever the contract says, and the transaction was a joint adventure on the basis of profits, we know no rule which would require a forfeiture by Reid of all the fruits of the joint enterprise. As it was not contemplated that any part of the profits should be paid to Reid until a time still far in the future, we think the just disposition of the case requires the present payment to Shaffer of the $5,000 and interest, but that the

Digitized by Google

contract should remain in full force. Under all the circumstances, neither party can justly complain of this conclusion.

[8] We are aware that in some cases of joint adventure assumpsit has been regarded as the proper remedy for the recovery of a liquidated sum withheld from the other by a joint adventurer. Galbreath v. Moore, 2 Watts (Pa.) 86; Hurley v. Walton, 63 Ill. 260. Yet the impossibility of fixing an exact sum which could be recovered at law, together with the prayer for a cancellation of the contract, and the other circumstances hereinbefore stated, leave no doubt of the jurisdiction of the court in equity, notwithstanding the misconception of the parties of their relative rights, as shown in the bill and answer. The bill specifically prays "for such other and further relief as the equities of the case may require." A just balancing of the equities requires the present payment of the $5,000 and interest to Shaffer, and the retention by Reid of his share of all the profits, as hereinbefore set forth.

It follows, from what has been said, that the decree below should be reversed, in so far as it directs a cancellation of the contract and adjudges Shaffer to be entitled to the $5,000 and interest from Reid as his agent, or is otherwise inconsistent with this opinion. The District Court is directed to enter a decree in accordance with the views herein expressed. The costs of the appeal will be divided equally between the parties.

(249 Fed. 562)

EDWARDS v. BODKIN.

(Circuit Court of Appeals, Ninth Circuit. March 8, 1918.)

No. 3046.

1. APPEAL AND ERROR ⟹773(3)—DISMISSAL—BRIEFS.
   Where plaintiff prosecuted an appeal in forma pauperis under permission of an order of the Circuit Court of Appeals relaxing rules 23 and 24 (150 Fed. cxiv, cxv, 79 C. C. A. cxiv, cxv), the appeal cannot be dismissed because no printed brief containing a concise abstract or statement of the case had been filed or served as required by such rules.

2. APPEAL AND ERROR ⟹724(1)—SPECIFICATIONS OF ERROR—EQUITY.
   While in an equity case the specifications of error should state as particularly as may be in what respect the decree is alleged to be erroneous, the rule should be relaxed in favor of plaintiff, prosecuting an appeal in personam pursuant to an order allowing him to appeal in forma pauperis.

3. APPEAL AND ERROR ⟹397—NOTICE OF APPEAL—CITATION.
   Where an appeal was allowed in open court, and was perfected during the term at which the appeal was rendered, there was sufficient notice of appeal without any citation.

4. EQUITY ⟹363—PLEADING—MOTION TO DISMISS.
   A motion to dismiss a bill of complaint admits the truth of its material allegations.

5. PUBLIC LANDS ⟹103(1)—CONTESTS—INITIATIVE.
   A notice of contest against an entryman on public lands, in support of which the contestant made oath that he did not know and had no means of knowing the facts, is insufficient to initiate a contest.

⟹For other cases see same topic & KEY-NUMBER in all Key-Numbered Digests & Indexes

Digitized by Google

6. PUBLIC LANDS ⟹106(2)—LAND DEPARTMENT—DECISION.

While a decision of the Land Department that an entry was abandoned is conclusive as to the facts, it may be inquired into by the courts as a question of law.

7. PUBLIC LANDS ⟹40—ENTRIES—ABANDONMENT.

The failure of an entryman on arid lands withdrawn under Act June 17, 1902, c. 1093, § 3, 32 Stat. 388 (Comp. St. 1916, § 4702), as susceptible of irrigation, to continuously reside upon or cultivate the land, which, though later withdrawn for irrigation works, was finally released, during the time when no reclamation project had been devised or installed, cannot be deemed an abandonment; Act June 27, 1906, c. 3559, § 5, 34 Stat. 520 (Comp. St. 1916, § 4724), expressly saving such cases, and the entryman having prepared the land for cultivation and established a residence thereon.

8. PUBLIC LANDS ⟹96—REGULATIONS—AUTHORITY OF SECRETARY OF INTERIOR.

While Reclamation Act, § 10, authorizes the Secretary of the Interior to make such regulations as may be necessary and proper to carry the act into full force and effect, he is not authorized to amend, modify, or change Act May 14, 1880, c. 89, § 2, 21 Stat. 141 (Comp. St. 1916, § 4537), fixing the rights of a successful contestant, who has secured the cancellation of any pre-emption, homestead, or timber culture entry.

9. PUBLIC LANDS ⟹102—REGULATIONS—AUTHORITY OF SECRETARY OF INTERIOR.

Any right under regulation 7 of June 6, 1905, issued by the Secretary of the Interior under Reclamation Act June 17, 1902, § 10, which a successful contestant of a homestead entry on land withdrawn as susceptible of irrigation might have had, was lost by the promulgation of regulation 6 of January 19, 1909, declaring that, where a contest has been allowed prior to a first form withdrawal, the withdrawal, if made before the termination of the contest or entry of the successful contestant, will terminate all rights acquired by such contest, where the land, before termination of the contest or entry by contestant, was withdrawn under the first form for irrigation works, and the contestant had only a preference.

10. PUBLIC LANDS ⟹46—SOLDIERS' SCRIP—RIGHTS.

Scrip issued under the law and regulations relating to soldiers' additional homestead rights is subject to the regulations of the Land Department, and also to the equitable rule that an actual settler is to be preferred over claimants who seek to assert scrip rights to the public domain.

11. PUBLIC LANDS ⟹103(1)—PROTESTS—HEARING.

Where a contest against an actual entryman under the homestead laws was sustained, the entryman's protest against the contestant's lieu land selection should not be denied, on the ground that he had not served the contestant with a copy of the appeal, for, while the decision of the Land Department on questions of fact is final, it is based on the presupposition of a hearing in good faith.

Appeal from the District Court of the United States for the Southern Division of the Southern District of California.

Bill of complaint by William B. Edwards against Patrick H. Bodkin, to have defendant declared a trustee holding title to certain lands for the benefit of plaintiff. From a decree dismissing the bill, without leave to amend, plaintiff appeals. Reversed, with directions.

Wm. B. Edwards, of Redlands, Cal., in pro. per.

Duke Stone, of Los Angeles, Cal., for appellee.

Before GILBERT, ROSS, and MORROW, Circuit Judges.

Digitized by Google

MORROW, Circuit Judge. This is an appeal from a decree dismissing a bill of complaint without leave to amend. We shall designate the parties here as plaintiff and defendant, as they were in the court below.

[1, 2] 1. The defendant has interposed a motion to dismiss the appeal on the ground that no printed brief has been filed or served containing a concise abstract or statement of the case, presenting succinctly the questions involved in the manner in which they are raised; that no specification of errors relied upon is stated, and no citation has been issued and served upon the defendant as required by the rules of this court.

The plaintiff is prosecuting this appeal in forma pauperis, under the permission of an order of this court relaxing rules 23 and 24 (150 Fed. cxiv, cxv, 79 C. C. A. cxiv, cxv) requiring the printing of the transcript of record and briefs. In an equity case the rule requires that the specifications shall state as particularly as may be in what respect the decree is alleged to be erroneous. We find no special difficulty in understanding the questions involved in the controversy, and we think the plaintiff, who is prosecuting this appeal in personam, has stated the case as well as he knows how, and under the circumstances the rule in this respect should also be relaxed in his favor.

[3] The appeal appears to have been allowed in open court, and it was perfected during the term at which the decree was rendered. This was a sufficient notice of the appeal. Jacobs v. George, 150 U. S. 415, 14 Sup. Ct. 159, 37 L. Ed. 1127; Taylor v. Leesnitzer, 220 U. S. 91, 93, 31 Sup. Ct. 371, 55 L. Ed. 382.

[4] 2. The action is to have the defendant, to whom a patent has been issued by the Land Department of the government for a certain described tract of land originally within a reclamation reservation declared a trustee holding the title to such land for the benefit of the plaintiff. The motion admitted the truth of the material allegations of the complaint, and we must now read them as established facts, and determine whether or not they state a cause of action calling for equitable relief. Many of the allegations contained in the bill are irrelevant and immaterial to the questions to be determined, and will be so treated in our final conclusions.

The complaint is not a model of legal composition, but is an example of the difficulty to which judicial inquiry is sometimes subjected in getting at the real merits of a case, where the relevant and material facts are not fully or succinctly and plainly stated. In this respect the complaint in this case is exceptionally defective, and requires a restatement of the facts in an orderly sequence and with due regard to their logical and legal import.

The act of June 17, 1902 (32 Stat. 388, c. 1093 [Comp. St. 1916, §§ 4700–4708]), authorized the Secretary of the Interior to withdraw certain public lands of an arid or semiarid character from entry for irrigation purposes. The withdrawals provided in section 3 of the act were to embrace two distinct classes: First, public land required for any irrigation works contemplated under the provisions of the

Digitized by Google

act; second, public lands believed to be susceptible of irrigation from said works.

The first class has been designated by the Land Department as "withdrawals under the first form," and the second class as "withdrawals under the second form." In the withdrawal of lands under the first form there was no exception. All the lands described were withdrawn from public entry. In the withdrawal of lands under the second form there was an exception in favor of homesteads; that is to say, such lands were not withdrawn from public entry under the homestead laws, but were continued to be open to such entry, "subject to all the provisions, limitations, charges, terms and conditions" of the act.

On July 17, 1902, the Secretary of the Interior withdrew certain public lands in Southern California under the provisions of the act of June 17, 1902. The withdrawal was of the class of lands designated as "second form"; that is to say, lands believed to be susceptible of irrigation under the reclamation system provided by the act. These lands continued to be open to homestead settlement and entry, notwithstanding their withdrawal, and included, among others, the N. E. ¼ of section 11, township 7 S., range 2 E., S. B. M.

On December 1, 1902, and within six months after the passage of the act, the plaintiff made entry of this tract of land under the homestead and reclamation laws of the United States. He was at the time qualified in every way to make and perfect such entry, and the land entered was then unappropriated public lands of the United States and subject to such entry. Thereafter plaintiff complied with all of the requirements of the homestead and reclamation laws, made final proof of such compliance before the United States land office for that land district, proved such compliance by two creditable witnesses, who made oath to all the items required by law to be made, paid all the fees required by law to be paid prior to receiving a patent for the land, published in due form notice to all persons having or claiming to have a better right to such land than the plaintiff, and required such persons to appear and exhibit such claim of right. No person appeared at the time and place and offered evidence of a better or of any right adverse to plaintiff; nor was notice ever given to plaintiff by the land office that the proof submitted was defective in any way as to the special or any of the conditions under which the entry was made. But the Land Department, without regard to the premises, refused to consider such proof and to issue a patent to plaintiff for the land described. After making the proof required, the plaintiff continued to reside upon the land, to cultivate and improve it in accordance with the purpose he had in making the entry, and kept his claim for a patent continually before the Land Department as a claim of legal right.

From a map attached to the complaint it appears that the land entered by the plaintiff as a homestead is about 5 miles due west from the Colorado river. Between this land and the river is a tract of land of about 4,000 acres, stretching along the west bank of the river, north and south, for a distance of 14 or 15 miles, and about 4

Digitized by Google

miles in width at a point between plaintiff's land and the river. This large tract of land is designated on the map as the "Blythe Rancho," and it is owned in private estate. From a point on the Colorado river where the northern boundary of the rancho touches the river runs a canal in a southerly and westerly direction, across the rancho and the public lands, terminating in public lands about a mile north of plaintiff's land. This canal is called the "Blythe Canal." When plaintiff entered his homestead, this canal only required opening and extending to reclaim all the public lands withdrawn for that purpose in that locality. The public lands immediately to the west of the lands of the Blythe Rancho susceptible of reclamation by irrigation comprise about 6,000 acres, but the water for their irrigation must be carried from the Colorado river across the private lands mentioned to reach the public lands. Within 30 days after plaintiff had entered his homestead he established his residence on the land, taking work stock and tools to the land, and improving, clearing, and preparing the land for cultivation; but plaintiff was not then able or prepared, or had occasion to believe he would be required, to reside upon and cultivate the land continuously until some form of reclamation had been devised and installed for use.

On September 12, 1903, the Secretary of the Interior withdrew a tract of land under the first form which included plaintiff's homestead entry. This withdrawal, under the act of June 7, 1902, excluded homestead entries, and provided that the Secretary of the Interior should restore to public entry any of the lands so withdrawn when in his judgment such lands were not required for the purposes of the act. The facts stated in the complaint indicate that nothing was done by the government in perfecting a system of irrigation for these lands under either the first or second form of withdrawal, but the lands were held as withdrawn for nearly nine years, and during that time left open for the work of a private corporation called the "Land & Water Company," which had succeeded to the ownership of the lands of the Blythe Rancho, and contemplated a system of irrigation for the private lands of the corporation and the adjoining public lands in which plaintiff's homestead entry was located. In this situation plaintiff purchased from the owners of the Blythe Canal the right to connect with that canal, and he dug a ditch over the government land to do so. Thereafter he cultivated and improved the land, never intending to abandon the same.

[5] On May 5, 1908, the defendant served a notice of contest upon the plaintiff, in which it was charged that the plaintiff had never established a residence upon the land, had made no improvements thereon, and that he had abandoned the same for more than six months. The defendant, in support of this contest, made oath that he did not know and had no means of knowing the facts. This was insufficient to initiate a contest. Schofield v. Cole, 1 Land Dec. 140. And at the hearing of the contest it was proven, and conceded without dispute, that plaintiff had established a residence upon the land in controversy, had made improvements thereon, and that any lack of cultivation or absence from the land was due to its character and its dependence upon a system of irrigation to be provided by the govern-

Digitized by Google

ment under the Reclamation Act or some other system; that, instead of abandoning the land, plaintiff was residing on, reclaiming, cultivating, and improving it when he was served with the notice of contest.

[6] With respect to the defendant's charge that the plaintiff had abandoned the entry, we may not inquire into this question as a question of fact, although we may believe it was erroneously determined, but we may inquire into it as a question of law. Stark v. Starr, 6 Wall. 402, 419, 18 L. Ed. 925; Silver v. Ladd, 7 Wall. 219, 228, 19 L. Ed. 138; Cornelius v. Kessel, 128 U. S. 456, 461, 9 Sup. Ct. 122, 32 L. Ed. 482; Johnson v. Towsley, 13 Wall. 72, 84, 20 L. Ed. 485; Moore v. Robbins, 96 U. S. 530, 535, 24 L. Ed. 848; Smelting Co. v. Kemp, 104 U. S. 636, 641, 26 L. Ed. 875; Steel v. Smelting Co., 106 U. S. 447, 450, 1 Sup. Ct. 389, 27 L. Ed. 226.

[7] In this aspect we find that under section 5 of the act of June 27, 1906 (34 Stat. 519, 520, c. 3559 [Comp. St. 1916, § 4724]), a charge of abandonment of an entry cannot be successfully maintained against an entryman whose failure to make improvements and reclaim the land entered by him was during a time when he was hindered, delayed, or prevented from making such improvements and from reclaiming the land by reason of the withdrawal of the land from public entry for irrigation contemplated by the Reclamation Act.

In Gustave Gilbertson, 38 Land Dec. 474 (1910), the Assistant Secretary of the Interior, referring to a withdrawal of lands under the Reclamation Act, and the extension of time provided for under the act of June 27, 1906, said:

> "Irrigation projects of such extent are necessarily co-operative. If such events happen by act of the government, that continuance of co-operation of the original projectors is prevented; the case comes within the act of June 27, 1906, as a case of active interference by the United States, preventing success of a private co-operative project."

In John H. Haynes, 40 Land Dec. 291 (1911), the Assistant Secretary of the Interior, upon a rehearing upheld an entry that had been recommended for cancellation by the local land office, affirmed by the Commissioner of the General Land Office, and affirmed by the Department of the Interior; but upon rehearing the Assistant Secretary, referring to the requirements of the Reclamation Act added to the Homestead Act, said:

> "These added requirements cannot be performed by the entryman, or even definitely known, until the project is completed. More than seven years after the date of entry may elapse before a reclamation project is completed, water available, and charges known. Until water is available, cultivation is impossible. Any earlier attempt to cultivate would necessarily result in total loss of seed and labor. It would be irrational and unreasonable to subject the entryman to such loss in merely pretentious compliance with form of performance known to be useless and hopeless of fruitful return."

We assume that the act of June 27, 1906, was overlooked, or its meaning misunderstood, when the officers of the Land Department held that the plaintiff had abandoned his homestead entry while he was in fact residing upon the land and holding it, pending a final determination of the Secretary of the Interior as to whether or not the land would be required for irrigation works under the first form

Digitized by Google

of withdrawal. This was clearly a mistake of law, and authorizes a review of the proceedings in a court of equity. We might stop here, but for the fact that it is contended on behalf of the defendant that his contest resulted in his securing an absolute preference right to the land under the provisions of the act of May 14, 1880 (21 Stat. 140, c. 89 [Comp. St. 1916, § 4536]), and that this preference right was also extended until the land was restored to public entry. But it appears that in the final proceedings for a patent the defendant abandoned this claim of a preference right to enter the land, substituted a lieu land selection, and obtained his patent upon that claim. To understand this feature of the case it is necessary to follow the proceedings to the end.

[8, 9] The act of May 14, 1880, provides, among other things, as follows:

"Sec. 2. In all cases where any person has contested, paid the land office fees, and procured the cancellation of any pre-emption, homestead, or timber culture entry, he shall be notified by the register of the land office of the district in which such land is situated of such cancellation, and shall be allowed thirty days from date of such notice to enter said lands."

On June 6, 1905, the Commissioner of the General Land Office, upon the approval of the Secretary of the Interior, issued instructions to the registers and receivers of the land office concerning the withdrawal of lands under the Reclamation Act (33 Land Dec. 607). In these instructions it was said:

"Seventh. When any entry for lands embraced within a withdrawal under the first form is canceled by reason of contest, or for any other reason, such lands become subject immediately to such withdrawal, and cannot thereafter, so long as they remain so withdrawn, be entered or otherwise appropriated, either by a successful contestant or any other person; but any contestant who gains a preference right to enter any such lands may exercise that right * * * within thirty days from notice *that the lands involved have been released from such withdrawal and made subject to entry.*"

There are at least two objections to the application of these regulations to the defendant's contest. We do not find in the Reclamation Act any authority conferred upon the Secretary of the Interior to so extend the limitation of the act of May 14, 1880. It is true he was authorized by section 10 of the Reclamation Act "to make such rules and regulations as may be necessary and proper for the purpose of carrying the provisions of this act [Act June 17, 1902] into full force and effect." But he was not authorized to amend, modify, or change the act of May 14, 1880, under which the defendant claims his preferential right. But assuming, without so deciding, that this last-named act, construed in the light of the extension of time provided for in the act of June 27, 1906, authorized the Secretary of the Interior to give such instructions and to make such regulations, we are at once confronted with the second objection, based upon the fact that the regulations of June 6, 1905, relating to contested entries, were vacated before the defendant even attempted to make an entry under his supposed preferential right. The regulations of the Secretary of the Interior vacating the regulations of June 6, 1905, were issued January 19, 1909, and provided (37 Land Dec. 365):

Digitized by Google

"Sixth. No contest will be allowed against any entry embracing land included within the area of any first form withdrawal, and in all cases where a contest has been allowed prior to such withdrawal, the withdrawal, if made before the termination of the contest, or before entry by the successful contestant, will, ipso facto, terminate all right that was acquired by reason of such contest."

These regulations went into immediate effect. If we hold that the Secretary of the Interior had the authority to make the regulations of June 6, 1905, we must also hold that he had the authority to make the regulations of January 19, 1909. If he had the authority to make, he had the authority to unmake. If he could amend or modify the statute in one case, he could do so in the other.

When the regulations of January 19, 1909, were issued, no entry of the land had been made by the defendant. The withdrawal had been made before the termination of the contest and before entry by the defendant. The defendant had acquired no vested right to enter the land, but merely a preferred right of entry against every one except the United States, and this right, extended by regulation, might be terminated at any time. This was the decision of the Assistant Secretary of the Interior on February 17, 1909, in the case of David A. Cameron, 37 Land Dec. 450. We are of opinion that whatever preferential right the defendant had secured by his contest was terminated by the regulations of January 19, 1909.

If it should be conceded that defendant did obtain a preferential right to enter the land while the land was completely withdrawn from entry under the first form, it was a right which, based upon a regulation, might be terminated by the Secretary of the Interior before entry, and in our opinion was so terminated by the regulations of January 19, 1909. In Edwards v. United States, 223 Fed. 309, 138 C. C. A. 551, the appellant in that case (the plaintiff in this case) was indicted and convicted for resisting the entry of defendant upon the land in controversy on November 25, 1912. On appeal to this court an effort was made to raise the questions involved in the present case, but the record in that case did not present them for decision, and they were not decided. The court in affirming the judgment, said:

"The same questions may arise in future litigation between the different claimants, and, if they do, the parties should not be embarrassed by the decision of unnecessary questions at this time."

The defendant asserted his preference right to enter the land up to the final proceedings under which his right to a patent was to be determined by the officers of the Land Department, when he suddenly abandoned his entry and claim of a preferential right, and presented to the Land Department a scrip selection for the land, and secured the patent and title which is the subject-matter of this suit.

[10] With respect to the scrip location finally made upon the land by the defendant, we are unable to determine from the complaint precisely what proceedings were had in the Land Office under which the defendant was permitted to substitute a location of this character for the entry made under a claim of a preferred right. Presumably the scrip was issued under the law and regulations relating to sol-

Digitized by Google

diers' additional homestead rights. If it was so issued, it was subject to the regulations of the Land Department upon the subject, found in the regulations dated February 21, 1908 (36 Land Dec. 278), March 26, 1908 (36 Land Dec. 346), and June 16, 1908 (John M. Rankin, 36 Land Dec. 522). It was also subject to the equitable rule stated in Moore v. Northern Pacific Ry. Co., 43 Land Dec. 173, 175, where the Assistant Secretary of the Interior says:

"Our whole public land system is based upon the fundamental consideration that the settler is to be preferred over claimants who seek to assert scrip or other rights to the public domain. Lands settled upon and claimed under the homestead law do not fall within the designation of public lands open to sale or other disposition under general laws other than those relating to settlement. This department is not robbed of its jurisdiction and duty to give equitable consideration to asserted settlement claims by the tender of a scrip application for the land by one having no claim to equitable consideration."

The Assistant Secretary refers to a former decision of the Land Department to the same effect (Dakota v. Thomas, 35 Land Dec. 171), where the decision of the Supreme Court in Ard v. Brandon, 156 U. S. 537, 543, 15 Sup. Ct. 406, 39 L. Ed. 524, is cited as declaring that:

As repeatedly held by the courts, "the law deals tenderly with the one who in good faith goes upon the public lands, with a view of making a home thereon."

The court says further:

"If he [the homestead settler] does all that the statute prescribes as the condition of acquiring rights, the law protects him in those rights, and does not make their continued existence depend alone upon the question whether or no he takes an appeal from an adverse decision of the officers charged with the duty of acting upon his application."

[11] This last statement of the equitable consideration to be given to the claim of a homestead settler is applicable to this case. Plaintiff alleges that he protested against the acceptance of defendant's lieu land selection, and his application for hearing upon his protest was denied by the officers of the Land Department for the reason that the plaintiff had not served the defendant with a copy of the appeal. We infer from the allegations of the complaint that the protest against the defendant's lieu land selection was because the defendant had not complied with the regulations of the department governing such a proceeding. If this was the protest, and its denial was for the reason stated, we are of the opinion that the department was in error in not granting the hearing. He did not have a hearing upon his protest, although it was before the department for consideration. "The decision of the department is final, but that is on the presupposition that the decision was after a hearing in good faith, however summary in form." Chin Yow v. United States, 208 U. S. 8, 28 Sup. Ct. 201, 52 L. Ed. 369.

The motion to dismiss was made on the ground that the complaint does not state facts sufficient to constitute a cause of action. We think the complaint is not so defective as to justify its dismissal. It

Digitized by Google

does state facts sufficient to constitute a cause of action, but the facts are imperfectly stated, and with respect to the proceedings in regard to the defendant's lieu land selection are not fully stated.

The judgment is reversed, with direction to deny the motion to dismiss, and with leave to plaintiff to amend his complaint, if so advised.

(249 Fed. 571)

STUBBS v. UNITED STATES.

(Circuit Court of Appeals, Ninth Circuit. March 7, 1918. Rehearing Denied June 3, 1918.)

No. 3054.

CONSPIRACY ⚷47—POST OFFICE ⚷49—TO DEFRAUD BY USING MAILS—OFFENSE—EVIDENCE—SUFFICIENCY.

In a prosecution under Criminal Code (Act March 4, 1909, c. 321) §§ 37, 215, 35 Stat. 1096, 1130 (Comp. St. 1916, §§ 10201, 10385), for a conspiracy to devise a scheme to defraud by using the mails, and of devising a scheme to defraud, evidence *held* insufficient to show that defendant, who negotiated an exchange of property between the complaining witness and another, entered into any conspiracy to use the mails in connection with a scheme to defraud the complaining witness, or devised a scheme to defraud; it not appearing that defendant, who was guilty of trickery in effecting the exchange agreed upon, combined with others to defraud by use of the mails, or devised a scheme to defraud the complaining witness.

In Error to the District Court of the United States for the Southern Division of the Southern District of California.

Ira H. Stubbs was convicted under count 1 of an indictment charging conspiracy to devise a scheme to defraud by using the mails of the United States (sections 37 and 215 of the Criminal Code of the United States [Comp. St. 1916, §§ 10201, 10385]), and under count 2, which charged violation of section 215, and he brings error. Reversed, and new trial granted.

Albert H. Elliott, of San Francisco, Cal., for plaintiff in error.

Robert O'Connor, U. S. Atty., and Clyde R. Moody, Asst. U. S. Atty., both of Los Angeles, Cal.

Before GILBERT and HUNT, Circuit Judges, and WOLVERTON, District Judge.

HUNT, Circuit Judge. The important questions presented are: (1) Was a conspiracy proved? or (2) was it established that there was a scheme to defraud, in the execution of which the mails were used? The first count of the indictment charges that Stubbs, Jones, Margaret Turner, and E. Brown, about August 1, 1915, at Los Angeles, Cal., conspired to use the mails in a scheme and artifice to defraud such persons as would enter into negotiations with the defendants for the purchase, sale, or exchange of real estate pursuant to an advertisement put in the Los Angeles Examiner, a newspaper at Los Angeles. The scheme charged was substantially as follows:

Defendants advertised that Stubbs had for sale or exchange a bunga-

---

⚷For other cases see same topic & KEY-NUMBER in all Key-Numbered Digests & Indexes

Digitized by Google

low and certain lots, and intended that any person who should inquire about the property should be told that the original owner was a railroad man, who had left Los Angeles, and left the matter of selling, exchanging, or transferring to his wife; that his wife was the defendant Margaret Turner, and that she would sell or exchange the property to any inquirer, so as to realize out of it about $2,000; that it was agreed by the defendants that Stubbs would so state to any person inquiring about the bungalow described in their advertisement, and as agent for Margaret Turner would offer to sell and procure title to the bungalow and lots to be conveyed, subject only to a mortgage of $1,450, whereas Margaret Turner was not the owner of the bungalow or lots, and not the wife of a railroad man, or any other man, but was a pretender, to be used by defendants in obtaining conveyance of any title that the proposed purchasers of the bungalow should convey in exchange for the bungalow and lots. It is charged that the intention of the defendants was that by fraud and misrepresentation any inquirer should be led to believe that Margaret Turner was the owner and could convey title, and was to procure the inquirer to pay money offered for the bungalow, and to convey any property offered in exchange therefor to Margaret Turner, and not to convey to any such purchaser of the bungalow and lots any title in exchange for the money or property thus procured to be paid or conveyed to Margaret Turner; that Margaret Turner was thereafter to transfer the property to be conveyed to defendant Jones, and Jones would convey it to defendant Brown.

An overt act charged is that Stubbs, about August 15th, caused an advertisement to be placed in the Los Angeles Examiner, stating that he had for sale or exchange a five-room bungalow, and that the equity for sale or exchange was worth about $2,100. Another overt act charged is that in the office of Stubbs, in Los Angeles, in September, 1915, Stubbs and Jones and Turner had a conference with Mary Abercrombie, and agreed to exchange and transfer the bungalow and lots to her for certain lots at Culver City, Cal., then owned by Mary Abercrombie, and which she agreed to convey to Margaret Turner in consideration of the bungalow and lots and $300 to be paid by Margaret Turner to Mary Abercrombie. Another overt act charged is that Stubbs and other defendants fraudulently obtained possession of a deed executed by Mary Abercrombie preparatory to making the exchange of property, and caused the deed executed by Mary Abercrombie to be put on record in the county recorder's office in Los Angeles county, Cal.

The second count charges that defendants devised a scheme and artifice to defraud Mary Abercrombie and any other persons who might by them be defrauded pursuant to such scheme. It is alleged that they put an advertisement in the Los Angeles Examiner, a newspaper transmitted through the post office, that Stubbs had for sale or exchange the bungalow and lots referred to in count 1. It is not necessary to set forth in detail the substance of this count, inasmuch as it is predicated upon the same facts alleged in the first count. The overt act charged is that on September 11, 1915, the defendants mailed

Digitized by Google

a letter at Los Angeles, addressed to Mrs. Abercrombie, in Pomona, Cal., wherein defendant Stubbs, as the writer of the letter, among other things, told Mrs. Abercrombie that the parties who owned the $1,200 mortgage are out of the city, and that the "deal" cannot be closed until a later date, when all will be ready.

The evidence of Mrs. Abercrombie is substantially as follows:

About September 1, 1915, in answer to the advertisement concerning the sale or exchange of a bungalow and lots, she saw Stubbs, who told her that the bungalow would rent for about $35 a month and was a very good buy; that the equity was $2,100, with two outstanding mortgages, one for $1,200 and the other for $250. Mrs. Abercrombie told Stubbs that she valued her property at Culver City at from $2,300 to $2,500; that she might exchange for the bungalow, but wanted some cash. Stubbs told her that the parties were in a hurry; that the lady who was there, Mrs. Turner, had come to Los Angeles and bought the cottage after her husband had lost his position in Seattle, but that he had been reinstated and left the property in his wife's hands to dispose of. Mrs. Abercrombie saw the property, but declined to consider the matter unless the house was rented for a year. A few days thereafter it was agreed between Stubbs and Mrs. Abercrombie that she was to give her Culver City lot clear for the equity in the bungalow and $300 cash. A few days later Stubbs telephoned Mrs. Abercrombie that he had leased the property, and asked her to come and sign the contract and "close the deal." She helped to make the contract of exchange which she signed. Stubbs took it, telling her that, when Margaret Turner signed it, he would give her a copy; but he never did. The contract, as recalled by Mrs. Abercrombie, was that Margaret Turner was to give her a deed for the bungalow property clear of all incumbrances, except $1,450, and $300 in cash, in exchange for the Culver City property. Stubbs wanted her to sign a deed that day, but she declined. Stubbs said that Mrs. Turner had not raised the $300, but that he would lend it to her if she did not get it very soon. A few days later Stubbs showed her a check for $300, but said Margaret Turner had not closed the deal; the check was not indorsed. Negotiations not being carried through, Mrs. Abercrombie returned, and later received a letter, dated September 11th, telling her to come in to "close the deal." Mrs. Abercrombie went to Stubbs' office on the 16th and found Margaret Turner there. Stubbs told her that he was not ready to close the deal, but had $25 to advance to her on the deal, and if it was not closed by the 20th that sum would be a forfeit. He asked her to sign the deed for the Culver City property to Mrs. Turner, which was ready and dated September 3d. Mrs. Abercrombie signed it and acknowledged it, was paid $25, but kept the deed, with the understanding that they were to "go into escrow" the next day at the Title Insurance offices.

On September 17th she saw Stubbs in the Title Insurance & Trust Building in Los Angeles, and also met defendant Jones and a Mr. Ogden. Mrs. Abercrombie told Stubbs in that interview that the matter was not being carried out as she understood it, inasmuch as

Digitized by Google

Stubbs had told her that, if she would bring a certificate of title and leave it with him, he would look up the title without cost, and that his client would do the same with the property he was going to show her, and that, if he could satisfy himself, there need be no money spent for continuing title certificates. Stubbs was to show her a certificate of title held by the man who held the mortgage upon the bungalow, and the certificate was not to be brought down to date by the title company. Stubbs then told Merrill that the $250 incumbrance was past due. Jones said he was "in on this deal, and I am buying your lot, Mrs. Abercrombie, from Mrs. Stubbs, so we can go on and talk it over." Merrill did not like the form of deed, and Jones got a grant form which Merrill liked better. Jones said it made no difference to him, and then said to Merrlll, "Why not let Mrs. Abercrombie make this delivery direct to Brown, and not use the bargain and sale form of deed?" Mrs. Abercrombie said she was indifferent as to the grantee, Turner or Brown, provided she got what was due her. Thereupon, at Stubbs' office, Stubbs gave back to Mrs. Abercrombie the deed she had first made, and she put it in her pocketbook, and then made a new deed and went back to the Title Insurance office and "entered into escrow." She then gave both the original deed and the deed to Brown to Merrill. Later she met defendant Jones and told him she did not think she would go on with the deal. Jones told her that he, not Stubbs, was the cause of the delay, and that he thought it was all right for her to go on without a certificate of title; but Mrs. Abercrombie declined to go on unless Margaret Turner signed a statement that there was nothing against the property except the $1,450. Stubbs then telephoned to Margaret Turner and left. Thereafter, at Stubbs' office, Margaret Turner signed a statement that there was nothing against the property but the $1,450, and Mrs. Abercrombie then signed and duly acknowledged a new deed, conveying her property to Brown, and put it in her pocketbook. She then went back to the Title Insurance Company's office and tore the name off the deed which was there.

The witness said that, when in the office of the Title Insurance Company, Mr. Merrill asked her if she was satisfied as to the title of the bungalow. She replied, "No," and claimed the privilege of having certificate of title come through that company, to which Stubbs said, "You will have to pay $7.50 for continuing the abstract;" that she agreed. She then passed both deeds over to Mr. Merrill, and Stubbs handed to Mr. Merrill the Margaret Turner deed. Mrs. Abercrombie designated Mr. Merrill as her agent, with authority to stamp the instrument. Stubbs was to leave the $300 cash due her, and she was to satisfy herself as to the title, and Stubbs was to aid her by lending her the documents. Merrill then laid the Turner deed before her, and put the bargain and sale deed closer to Stubbs. Stubbs picked up the original deed to Turner and said, "This is worthless now," and went through the motions of tearing it up and putting it in the waste paper basket. The next time she saw the deed to Margaret Turner was in the recorder's office, about September 30th; the deed having been put in the recorder's possession with-

Digitized by Google

out her knowledge or consent. She saw Stubbs again about the 25th of September in his office, and demanded that he reconvey the property included in the Turner deed, to which Stubbs replied, "They accepted it." A few days before this Stubbs had told her that he would give her a $5,000 bond assuring the title to the property, but she had replied, "No," that she wanted a certificate through the Title Insurance Company. About September 21st Jones telephoned her to the effect that by her request for a certificate of title the deal had been tied up, and wanted to know if there was anything he could do to further the matter, and Mrs. Abercrombie replied, "No." Mrs. Abercrombie and Jones had a talk in the presence of Stubbs, and she charged him with complicity with Stubbs in defrauding her of her property. Jones said that he came in to buy a lot and did not know anything about it. After some accusations she consulted her counsel, and told him that according to the record W. L. Moody owned the bungalow and lot (15 Bittle Tract). Mrs. Abercrombie's attorney then gave Jones and Stubbs until Monday to make a reconveyance of the Culver City property. Stubbs admitted that he ought not to have taken the deed, and was sorry that he had recorded it, and said he thought Brown would deed the property back, and that Jones had a deed from Brown, conveying the property back to her, but that it was not properly acknowledged. Thereafter Mrs. Abercrombie received her deed to Brown from the Title Insurance & Trust Company and tore it up.

On cross-examination Mrs. Abercrombie said she was perfectly satisfied if all the stipulations were lived up to, and that the $300 "boot money" was deposited on the 29th; that she had written to Stubbs on the 27th of September, telling him that she did not want to go through with her contract, and that before that date she knew that Stubbs had sold the lot he was getting from her for Mrs. Turner to a Mr. Brown through the real estate agent, Jones; that she made no objection, provided they did what they agreed to do; that she did not deliver to Stubbs a bargain and sale deed, and did not receive from him a deed executed by Margaret Turner; that the two deeds were on the table when Mr. Merrill was present, and that Stubbs told her she could take the deed and satisfy herself as to the title; that on the next day she took it back and offered it to Merrell, who told her to send it to Stubbs, but that she did not do so, and turned it over to the Title Insurance Company on the 24th of September. She says that on the 17th of September she had a talk with Stubbs and Jones and Merrill, when Merrill placed the bargain and sale deed in front of Stubbs and the Turner deed in front of her, and she signed an escrow instruction, which was put in the Title Insurance & Trust Company, regarding the Culver City lot to Brown, but does not remember that the instruction called for a payment to her of the sum of $275; that Stubbs paid her $25 as part of the payment of $300, and that she was to receive $275 through escrow; that her main object was to get the $300, and that she was satisfied with the property she was to get from Margaret Turner in exchange for her property.

Digitized by Google

George Stelle, called by the government, testified that he was employed in the escrow department of the Title Insurance & Trust Company of Los Angeles, and had charge of the escrow between Mrs. Abercrombie and Stubbs; that on September 22, 1915, the company delivered to Stubbs the certificate of title to the Culver City lot, and he receipted for it, and on September 29th $275 was deposited by Mr. Clanton to the credit of Mrs. Abercrombie on the escrow involving the exchange of properties between Margaret Turner and Mrs. Abercrombie. Clanton testified that he had made the $275 deposit in the interest of Mr. Jones, and deposited it with instructions to the Title Insurance & Trust Company to pay the same to Mrs. Abercrombie.

C. L. Brewer testified that in September, 1915, he was employed by the Los Angeles Title Insurance Company; that he had an escrow dated September 22, 1915, to which Stubbs and Jones were related. This escrow was signed by Jones, and called for $635 to be used for guaranty of title for lot 10, block 19, tract 2444, Culver City property, to show title vested in A. W. Brown. Brewer further said that, when Stubbs and Jones left the escrow, they handed to him the deed from Mrs. Abercrombie to Margaret Turner, and on the same day Stubbs advised the witness to deliver the deed to Miss Betty Richards; that thereafter they received a deed from Margaret Turner to Brown, which was used in place of the prior deed, owing to a defect in the power of attorney in the first deed; that the $641 cash placed in escrow by Jones was on hand; that papers were signed for recording and the money disbursed on the 25th; that a check was delivered in favor of Nellie Stubbs for $1,615.50. The deed, which was part of the escrow from Turner to Brown, was signed by Stubbs, as attorney in fact for Margaret Turner. This deed, as stated, was not used, because of a defect in the power of attorney. In the deed, Margaret Turner, described as a single woman, granted to A. W. Brown, a single man, lot 10, block 19, tract 2444, etc.

Albert Chapelle, an employé of the district attorney's office in Los Angeles county, testified that he had a talk with Stubbs about October 2, 1915, concerning the transaction between Stubbs and Mrs. Abercrombie; that Stubbs said he had received the deed from Mrs. Abercrombie to Margaret Turner, and that it had been put in escrow with the Title Insurance & Trust Company; that Jones objected to the deed, whereupon it had been arranged between Jones, acting for Brown, Mrs. Abercrombie, and himself that this deed should be withdrawn, and a deed directly from Mrs. Abercrombie to Brown should be substituted for it in escrow at the Title Insurance & Trust Company; that Stubbs said he had recorded the deed because Jones was pushing him to close the transaction and that the deal would be lost if the matter was not hurried up.

On the part of the defendants one witness was called, Baker, who said that he had a lien on the property located at 1307 Myra street (evidently the Margaret Turner lots), a trust deed, which he had since foreclosed, and when foreclosed, in May, 1916, that he served parties by the names of Moody, Abercrombie, and Turner with notice of foreclosure.

Digitized by Google

We cannot gather from all this evidence substantial proof of a conspiracy (section 37, 35 Stat. 1096) to commit a violation of section 215 of the Criminal Code, or of a violation of section 215. The advertisement was not a misrepresentation. Stubbs had the property for exchange, and Mrs. Abercrombie, who is evidently a very intelligent and capable woman, examined it and then concluded it was worth the price set upon it by Stubbs, and advised Stubbs that she was ready to make the exchange if her terms were complied with. There was no evidence to sustain the charge in the indictment that Stubbs or any one else told Mrs. Abercrombie that the original owner of the property was a railroad man and the husband of Mrs. Turner, or that Mrs. Turner wanted to realize about $2,000 from the property. In the preliminaries, certainly, Mrs. Abercrombie was not misled in any way, but, on the contrary, was perfectly satisfied to make the exchange. There appears to have been no unfairness in the matter of values, and no evidence of any criminal combination between Stubbs and Mrs. Turner or Jones in any of the preliminary talks, relating to the sale or exchange of the property. It may be that there was some cause for suspicion in the statements made by Stubbs in excusing himself for delay in not procuring the $300 from Mrs. Turner; but, assuming there was, still there is lack of evidence of any concert of action between Stubbs and any one with intent to devise a scheme to defraud and to defraud by using the mails.

The evidence shows that Mrs. Turner owned the property, subject to two mortgages, amounting to $1,450. If, as a fact, at the time of the negotiations or execution of the papers, Mrs. Turner was not the owner, the prosecution could have easily proved the state of title; and, if it were not in Mrs. Turner, a strong case against the defendant would have been made. But in the absence of such evidence the presumption of innocence stands in defendant's favor. Again, there was the payment of $25 to Mrs. Abercrombie, which was accepted by her after statements by Stubbs of the inability of Mrs. Turner to make the further payment until a later date, and the evidence of the prosecution is that at a later date the $275 was deposited for the credit of Mrs. Abercrombie. There was, on Mrs. Abercrombie's part, dissatisfaction over the evidence of title to the Turner property and some parleying between her and Stubbs; but the conversations constituted no sufficient evidence of conspiracy to defraud between Stubbs and any one else.

Coming now to the fact that there was a third person interested, we find that Mrs. Abercrombie was told, in the presence of Mr. Merrill, of the Title Insurance & Trust Company, that there was another person interested; but she frankly says that she made no objections "as to the deal being a three-cornered one," and that it was satisfactory if they did what they stipulated to.

The connection of Jones with the transaction is also important. The indictment charges that Margaret Turner would cause the lots to be conveyed by the purchaser to Jones, and that Jones would thereafter convey or cause the lots to be conveyed to Brown, as part of the fraudulent scheme. But, as it was explained to Mrs. Abercrombie before

Digitized by Google

she concluded the transaction that Jones was not the real buyer, and that Brown was to be the purchaser of the property, and as Mrs. Abercrombie was "perfectly satisfied," provided she received the $300 agreed to be paid to her, we cannot see how it can be said that there was proof, beyond a reasonable doubt, of a combination between Stubbs and Jones, or Brown or Turner, with purpose to defraud. The transaction was, as explained by Mrs. Abercrombie, a "three-cornered deal." She said:

"I knew * * * that he [Stubbs] sold the lot he was getting from me for Mrs. Turner to a Mr. Brown through the real estate agent named Jones. I knew Mr. Jones expected to get my Culver City lot from Mr. Stubbs."

Furthermore, the transaction was carried through in the office of an escrow agent, the Title Insurance & Trust Company. It comes, then, to this: If there was a conspiracy to defraud, as charged, or a scheme devised, it must have been in relation to what happened on the 17th of September, when Mrs. Abercrombie and Stubbs and a Mr. Ogden met in the Title Insurance & Trust Company Building in Los Angeles. There the matter of the exchange was talked over between Stubbs and Mr. Merrill. Jones said he was buying the lot from Stubbs, and that it made no difference to him what form of deed was used. Mr. Merrill objected to one form, and Jones suggested that Mrs. Abercrombie could make delivery direct to Brown, who appears to have been exchanging an equity in some acreage for a lot in Culver City, which was the lot Mrs. Abercrombie was conveying to Margaret Turner. But Mrs. Abercrombie distinctly says that she was asked by Mr. Merrill if she was willing to deed directly to Brown, and replied that she was, if she got what was agreed to be paid to her; that she did not care who got the property, and would deed to Brown, or Margaret Turner, "whichever one you all decide on, if I get what is due me." The only reason, apparently, why the deeds were not made then and there was the desire to save the expense of having them made out by the Title Insurance Company. Mr. Merrill at that time gave to Mrs. Abercrombie the deed she had made to Margaret Turner. New deeds were made and put in escrow in the Title Insurance office, Mrs. Abercrombie also giving to Mr. Merrill the original deed. Again, thereafter, Mrs. Abercrombie went over the whole transaction with Jones.

There remains the circumstance of the action of Stubbs in going through "the motion of tearing up the original deed" in the presence of Mr. Merrill and Mrs. Abercrombie. It is not contended that Stubbs did destroy the deed; his fault was in allowing Mrs. Abercrombie to think he had destroyed it, and in putting the deed upon record and not frankly telling Mrs. Abercrombie the whole truth, or making known to her or to Mr. Merrill what his purpose was. Of course Stubbs was wrong in this, and afterwards admitted his error. But, after all, the material question for decision is whether he was one of a conspiracy to devise a scheme to defraud by using the mails of the United States; and, granting that his conduct in and about the recording of the deed was deception, nevertheless, if there is no evidence of conspiracy or of a scheme to defraud and use of the mails,

Digitized by Google

the conviction of the charges against him cannot stand. Farmer v. United States, 223 Fed. 903, 139 C. C. A. 341.

It is to be emphasized that the contract of exchange between the parties called for certain things, which were done. There was a deed to the Turner property, subject to a total secured indebtedness of $1,224, delivered to Mrs. Abercrombie through the escrow agent. Mrs. Abercrombie was to be paid $300 by Margaret Turner; $25 was paid to her at the signing of the contract, and the balance was delivered to the escrow agent for her. Before she transferred to Brown, she knew that there was a third party, Brown, in the matter, and made no objection whatsoever. Mrs. Abercrombie was not injured by the recording of the deed, and assuming that there was chicane on the part of the defendant Stubbs in not telling her of his purpose, and in having the deed recorded, it does not prove that he was in fraudulent combination with Jones, or Brown, or Margaret Turner, or that he had devised a scheme to defraud any one, and in carrying it out used the mails, as charged in the first and second count of the indictment. The explanation of counsel for Stubbs is that Stubbs feared Mrs. Abercrombie would try to get out of her contract, and, as he was bound in the three-cornered deal to sell, his possession of the deed was a kind of guaranty that Mrs. Abercrombie would stand by her bargain, and that Stubbs expected to get the balance of the $300 wherewith to pay Mrs. Abercrombie out of the sale to Brown, to whom she made the deed already referred to. This may or may not be correct, but it is compatible with innocence of alleged criminality. It is to be remembered that the Turner deed to Mrs. Abercrombie had already been delivered to the escrow agent by Stubbs, and the $25 of the $300 had been paid. Stubbs should have acted with candor and waited; but, confining our opinion to the evidence of the charge made against him, we cannot deduce the criminality alleged by reason of the fact that he kept the first deed and put in on record, or wrote the letter of September 11th to Mrs. Abercrombie. Trickiness of method in carrying out the agreed-upon exchange is not to be confused with a scheme to defraud as charged.

Judgment is reversed, and a new trial granted.

(249 Fed. 579)

FARMERS' STATE BANK v. FREEMAN.

In re JONES BROS. & CO.

(Circuit Court of Appeals, Eighth Circuit. February 23, 1918.)

No. 4907.

1. APPEAL AND ERROR ⟹1008(1)—REVIEW—FINDINGS OF TRIAL COURT.
   Findings by the trial judge, who heard the evidence and saw the witnesses when testifying, will not be disturbed, unless clearly against the weight of the evidence, or induced by a mistaken view of the law.

2. BANKRUPTCY ⟹163—PREFERENCES—WHAT CONSTITUTES.
   Where, within four months of adjudication, a bankrupt whose indebtedness to a bank was overdue, gave a bill of sale conveying certain prop-

⟹For other cases see same topic & KEY-NUMBER in all Key-Numbered Digests & Indexes

Digitized by Google

erty to the bank's attorney, who transferred to the bankrupt funds lent by the bank on security of the bill of sale, and the bank thereupon applied to its indebtedness such funds, which were deposited to the credit of the bankrupt, the transaction must be deemed a scheme to prefer the bank, and the application of such moneys cannot be justified as a banking transaction.

3. BANKRUPTCY ⟹303(3)—PREFERENCES—INSOLVENCY—EVIDENCE.
In a suit to set aside an alleged preferential payment to a bank, evidence *held* to show that at the time of the payment the corporate debtor, which was subsequently adjudicated bankrupt, was insolvent.

4. BANKRUPTCY ⟹166(5)—PREFERENTIAL PAYMENT—KNOWLEDGE OF ATTORNEY.
Knowledge of an attorney, who acted in the transaction which culminated in a preferential payment to his client, a creditor of the bankrupt, is imputable to the client.

5. BANKRUPTCY ⟹166(4)—PREFERENTIAL PAYMENT—KNOWLEDGE.
Under Bankruptcy Act July 1, 1898, c. 541, § 60b, 30 Stat. 562 (Comp. St. 1916, § 9644), declaring that, if a transfer, etc., shall operate as a preference, and the person receiving it or to be benefited thereby, or his agent, shall have reasonable cause to believe that the transfer would effect a preference, it shall be voidable, notice of facts which would invite a person of reasonable prudence to inquiry is notice of all the facts which a reasonably diligent inquiry would develop.

Appeal from the District Court of the United States for the Western District of Arkansas; F. A. Youmans, Judge.

Suit by F. F. Freeman, as trustee in bankruptcy of Jones Bros. & Co., a corporation, against the Farmers' State Bank and another. From decree for plaintiff, the named defendant appeals. Affirmed.

W. N. Ivie, of Rogers, Ark., for appellant.

L. H. McGill, of Bentonville, Ark., and E. H. Thomas, of Kansas City, Mo., for appellee.

Before SANBORN and SMITH, Circuit Judges, and TRIEBER, District Judge.

TRIEBER, District Judge. This is an appeal from a decree in favor of the appellee. The action was against the appellant and one E. M. Fowler to recover an alleged preferential payment made to the bank by the bankrupt within four months prior to its adjudication as a bankrupt. The material facts charged in the complaint are that on February 6, 1915, an involuntary petition in bankruptcy was filed against Jones Bros. & Co., a corporation, upon the ground of having made preferential payments while insolvent. Among the preferential payments alleged to have been made was that to the appellant for the recovery of which this action was instituted. The bankrupt filed an answer denying the insolvency and the acts of bankruptcy charged. Upon a hearing the court adjudicated the company a bankrupt, and the appellee was duly elected and qualified as trustee.

It was charged in the complaint: That on January 13, 1915, the bankrupt was indebted to the appellant bank in the sum of $3,196 and interest thereon, evidenced by its promissory note. The note had been overdue since October, 1914, and was unsecured. That on that

⟹For other cases see same topic & KEY-NUMBER in all Key-Numbered Digests & Indexes

Digitized by Google

day the defendant, E. M. Fowler, Mr. Clark, the cashier of the appellant bank, and the president of the Jones Company agreed upon and carried out the following scheme: The bankrupt executed to E. M. Fowler a bill of sale, whereby it conveyed to him 8,000 gallons of apple juice, belonging to it, for the expressed consideration of $3,500. That the said Fowler, not being possessed of the money, borrowed it from the appellant, executing his note for said sum of money, and as security for the loan pledged the bill of sale executed to him by the bankrupt. That the bank gave Fowler credit on its books for that sum of money, and Fowler immediately thereafter gave his check on the bank to the bankrupt for the $3,500. The check was thereupon deposited by the bankrupt with the appellant, and that evening, after banking hours, the bank charged the bankrupt with the amount of the note. That Mr. Fowler was the attorney for the bank, as well as of the bankrupt at the time. That for a long time prior to this transaction the bankrupt had kept its account with the appellant bank, which showed that for a considerable time the bankrupt was overdrawn at the bank, and when it had balances they were for very small sums. That at the time this transaction took place the bankrupt was insolvent, which was known to the appellant, as well as Mr. Fowler, its attorney. That the application of the money thus deposited to the credit of the bankrupt was not made in good faith in the usual course of business, but for the purpose of enabling the appellant to secure an unlawful preference, in violation of the provisions of the Bankruptcy Act.

Defendants filed separate answers, denying that the bankrupt was insolvent at the time, and alleging, if it was insolvent, that neither of the defendants knew it or had reasonable cause to know it, that the transaction was made in good faith, and not for the purpose of obtaining thereby the apple juice as a security for the bankrupt's indebtedness to appellant, and that the payment was not an unlawful preference, but a set-off, as the bank had a right to make. The hearing was upon oral evidence, and the court found that the bankrupt, at the time this transaction took place, was insolvent, and that the transaction was in pursuance of an understanding between the officers and attorney of the bank and of the bankrupt, for the purpose of giving the bank a preference in the collection of its note, and rendered a decree against the bank for the amount claimed, but no decree was rendered against the defendant Fowler. From this decree the appellant prosecutes this appeal.

[1, 2] The findings of the trial judge, who heard the evidence and saw the witnesses, when testifying, will not be disturbed by the appellate court, unless it is clearly against the weight of the evidence, or was induced by a mistaken view of the law. A careful reading of the evidence convinces that the entire transaction was merely a scheme for the purpose of enabling the appellant bank to secure payment of its debt in full, and enable it to bring the transaction within the rule laid down in N. Y. County Bank v. Massey, 192 U. S. 138, 24 Sup. Ct. 199, 48 L. Ed. 380. Mr. Fowler had no money of his own to lend; the bank advanced it to him; he loaned it to the bankrupt, taking as

Digitized by Google

security therefor the bill of sale of the apple juice; the check he gave to the bankrupt was on the appellant bank, and was deposited immediately by it with the bank; and on the same day, after banking hours, the note was charged by the bank to Jones Bros. & Co.

[3-5] But it is earnestly contended that the evidence does not justify the finding that Jones Bros. & Co. was insolvent at the time, within the meaning of the Bankruptcy Act, and, if it was, that the appellant or its attorney knew it, or had knowledge of facts sufficient to put it upon notice of the insolvency. The evidence establishes that the assets of the bankrupt at that time, at the most liberal estimate, did not exceed in value at a fair valuation, $104,229.41. The property was appraised by experienced appraisers, one of them the secretary of the bankrupt company, and whenever the records or bills, showing the cost of each article, could be found, they were accepted by the appraisers as the fair value of the property. The appraisements of the real estate and buildings were based upon the careful estimate of an experienced architect as to their actual value and cost of reproduction. It showed the values as follows: Springdale plant, $11,302.32; Centerton plant, $7,262.30; Rogers vinegar plant, $26,094.98; Rogers preserving plant, $5,955.91; the St. Joseph property, taking all the merchandise at actual value, if in perfect condition, $9,400; the merchandise at Rogers was found to be worth $2,100. The accounts due the bankrupt were mostly uncollectable, and, as the trustee testified, that although he had made extraordinary efforts to collect them, he has been able to collect but very little, as the debtors have no property subject to execution, and that at the outside they were worth not more than $1,000. The property in the state of Texas belonging to the bankrupt estate, as shown by the testimony of the manager, who had charge of it, was $33,712.46; but allowing therefor the value claimed for it by the bankrupt, $41,113.90, makes the full value of all the assets $104.229.41. The debts which have been proved against the estate, and are in process of proof, leaving out of consideration the disputed claims, amount to $118,941.28. The real value of the assets was considerably less; but, allowing the full value therefor, there was a deficiency of nearly $15,000.

On behalf of appellant it is claimed that the statements of the bankrupt's assets and liabilities, furnished it by the bankrupt, show that its assets exceed its liabilities by a very large amount. But these statements are of little value, as appears from the face of them. Great reliance was placed upon the statement of September 30, 1914, made by an auditing accountant, and which was furnished to the bank. This statement by the auditor was simply what the books showed. Of how little value this statement is, is shown by the fact that among the assets is listed $500,000 for good will. The real estate, buildings, and equipment appear on this statement as of the value of $249,468.43. Among the real estate was included some property in Texas, listed as of great value, which did not belong to the bankrupt, but for which they only held a lease, and it had been forfeited at the time the bankruptcy proceedings were instituted.

The state of the bankrupt's account with the bank, and the fact that

Digitized by Google

this note had been overdue for three months, would clearly indicate to any business man that the company was insolvent. Mr. Fowler, who was the attorney for the bank in this transaction, and also the attorney of the bankrupt, certainly knew of the company's insolvency, and his knowledge was the knowledge of the bank. Section 60b of the Bankruptcy Act. Notice of facts, which would incite a person of reasonable prudence to an inquiry under similar circumstances is notice of all the facts which a reasonably diligent inquiry would develop. Coder v. McPherson, 152 Fed. 951, 82 C. C. A. 99; Huttig Mfg. Co. v. Edwards, 160 Fed. 619, 87 C. C. A. 521.

The findings made by the trial judge are clearly supported by the weight of the evidence, and there was no mistaken view of the law; therefore the decree is affirmed.

(249 Fed. 583)

SHAWNEE NAT. BANK v. UNITED STATES.

(Circuit Court of Appeals, Eighth Circuit. March 4, 1918.)

No. 5000.

1. JURY ⟹19(15)—FORFEITURES—NATURE OF PROCEEDINGS.

A proceeding to forfeit, under Rev. St. § 2140 (Comp. St. 1916, § 4141), an automobile seized on land, on the ground that it was used as a means for the introduction of intoxicating liquor into the Indian country, is one at law, and the parties are entitled to the usual rights and remedies incident to such an action, including the right to trial by jury.

2. APPEAL AND ERROR ⟹907(2)—PROCEEDINGS TO FORFEIT VEHICLE—PRESUMPTIONS.

Where, in a proceeding under Rev. St. § 2140 (Comp. St. 1916, § 4141), to forfeit an automobile on the ground that it was used as a means for the introduction of intoxicating liquor into Indian country, the court found that a chattel mortgagee had a valid lien, but that it was inferior to the rights of the United States under the forfeiture proceeding, it must be presumed, in absence of evidence, that the mortgagee had nothing to do with the introduction of the liquor into Indian country.

3. STATUTES ⟹241(2)—CONSTRUCTION—FORFEITURE.

It is a principle of natural law and justice that statutes will not be held to forfeit property, except for the fault of the owner or his agents, unless such a construction is unavoidable.

4. INDIANS ⟹35—INTRODUCTION OF LIQUORS INTO INDIAN COUNTRY—FORFEITURES.

Rev. St. § 2140 (Comp. St. 1916, § 4141), providing for a search of the boats, stores, packages, wagons, sleds, and places of deposit of one suspected of introducing intoxicants into Indian country, and declaring that, if such liquor is found therein, the same, together with the boats, teams, wagons, and sleds used in conveying the same, and also the goods, packages, and peltries of such person, shall be seized and forfeited, does not warrant a forfeiture of the interest of an innocent chattel mortgagee in an automobile used by the mortgagor, who was in possession, to convey intoxicants into Indian country, this being particularly true, as Act March 2, 1917, c. 146, 39 Stat. 969, subsequently passed, expressly declares that automobiles or other vehicles or conveyances used in introducing intoxicants into Indian country, whether used by the owner or other person, shall be subject to forfeiture as provided in section 2140, for the language of the section, as well as the congressional construction placed thereon,

---

⟹For other cases see same topic & KEY-NUMBER in all Key-Numbered Digests & Indexes

Digitized by Google

indicates that no forfeiture should be allowed of any of the articles mentioned, except those owned by the guilty person.

5. INDIANS ⟹35—INTRODUCTION OF LIQUOR INTO INDIAN COUNTRY—FORFEITURES—"WAGONS"—"AUTOMOBILE."

Section 2140 (Comp. St. 1916, § 4141), by specifying boats, teams, wagons, and sleds, excluded automobiles, as those vehicles were unknown when the section was enacted, and a wagon is drawn by force outside of itself, while an automobile, as its name suggests, is a self-propeller, and Congress, had it intended to include all means of conveyance, might properly have used the word "vehicles" or "conveyances," as it did in Act March 2, 1917, which extended the forfeiture provisions to automobiles, etc., instead of specifying certain ones.

6. APPEAL AND ERROR ⟹671(1)—REVIEW—RECORD—QUESTION PRESENTED.

Where the trial court found that a chattel mortgagee had a valid lien on an automobile, sought to be forfeited under Rev. St. § 2140 (Comp. St. 1916, § 4141), because used by the mortgagor to carry intoxicating liquors into Indian country, but declared the lien inferior to the claim of the United States, the mortgagee was entitled to raise on such record the question whether the automobile was subject to forfeiture, as well as whether its interest could be forfeited, as the findings did not support the judgment.

In Error to the District Court of the United States for the Western District of Oklahoma; John H. Cotteral, Judge.

Libel by the United States against one automobile in which the Shawnee National Bank filed an interplea, asserting its ownership of the machine under a chattel mortgage. The lien of the bank was held inferior to the claim of the United States under the forfeiture proceedings, and the Bank brings error. Reversed and remanded, with directions.

Joe M. Adams and W. L. Chapman, both of Shawnee, Okl., for plaintiff in error.

John A. Fain, U. S. Atty., of Lawton, Okl., and F. E. Ransdell, Asst. U. S. Atty., of Oklahoma City, Okl.

Before SANBORN, CARLAND, and STONE, Circuit Judges.

CARLAND, Circuit Judge. Under the provisions of section 2140, Revised Statutes of United States, as amended by Act March 1, 1907, c. 2285, 34 Stat. 1017 (Comp. St. 1916, § 4142), on August 22, 1916, a special agent of the Indian Bureau for suppression of the liquor traffic among Indians, being informed that two white persons by the names of Frank Cole and Rufus H. London, had introduced or were about to introduce spirituous liquors into the Indian country, to wit, the Shawnee Indian allotment of one Irene Whitehead, situated in the state of Oklahoma, searched an automobile then in the possession of said Cole and London, and found therein spirituous liquor which had been introduced into said Indian country by said Cole and London by means of said automobile. The automobile was thereupon seized and proceeded against by libel in the court below, and, no owner appearing to claim the same, a judgment of forfeiture was entered. Prior to the judgment of forfeiture, however, plaintiff in error, hereafter called the bank, by leave of court interpleaded in the forfeiture proceedings and alleged that it was the owner of a chattel mortgage

Digitized by Google

on said automobile, given by said Cole April 11, 1916, to secure the payment of a promissory note for the sum of $636, due October 11, 1916; that said chattel mortgage provided that Cole should remain in possession of the automobile until default should be made in the payment of the note, provided, always, that if, at any time, the bank should deem itself insecure, the debt and interest should become due, and the bank should have the right to take possession of the automobile and sell the same at public auction in order to satisfy the amount of the debt. It was also alleged that the mortgage was duly recorded in the proper office on April 13, 1916. The bank prayed that the automobile be delivered to it under the terms of the mortgage for the purpose of foreclosure and sale. The judgment of forfeiture reserved a decision as to the claim of the bank, the proceeds arising from the sale of the automobile in the forfeiture proceedings; amounting to the sum of $551, being ordered paid into court to await a decision on said claim.

Subsequently the court decided that the bank had a valid lien by virtue of its mortgage on the automobile to the amount of its debt at the time the same was seized, but that said lien was inferior to the claim of the United States under the forfeiture proceedings. The bank was therefore denied any relief, and the proceeds arising from the sale of the automobile, less costs, were ordered distributed, one-half to the United States and one-half to the informer.

[1] In view of the proceedings in the court below, it is proper to state that, the seizure in this case being on land and not within the admiralty jurisdiction of the United States, the action in the court below was properly an action at law, in which the parties were entitled to such rights and remedies as are incident to such an action in the federal courts, including the right to trial by jury. The Sarah, 8 Wheat. 391, 5 L. Ed. 644; Morris's Cotton, 8 Wall. 507, 19 L. Ed. 481; Confiscation Cases, 20 Wall. 92, 22 L. Ed. 320; Armstrong's Foundry, 6 Wall. 766, 18 L. Ed. 882; Confiscation Cases, 7 Wall. 454, 19 L. Ed. 196; Henderson's Distilled Spirits, 14 Wall. 44, 20 L. Ed. 815. There seems, however, to have been no disputed question of fact in issue at the trial, and, as no objection was made to the form of the proceeding or the manner of trial, nothing more need be said.

[2-4] Section 2140, under which the automobile was forfeited, reads as follows:

"If any * * * has reason to suspect or is informed that any white person or Indian is about to introduce or has introduced any spirituous liquor or wine into the Indian country in violation of law, * * * may cause the boats, stores, packages, wagons, sleds, and places of deposit *of such person* to be searched; and if any such liquor is found therein, the same, together with the boats, teams, wagons, and sleds used in conveying the same, and also the goods, packages, and peltries *of such person*, shall be seized and delivered to the proper officer, and shall be proceeded against by libel in the proper court, and forfeited, one-half to the informer and the other half to the use of the United States." Comp. St. 1916, § 4141.

It is claimed by counsel for the United States that the above statute treats the automobile in this case as the offender, without any regard whatsoever to the personal misconduct or responsibility of the owner

Digitized by Google

thereof, and therefore, as the automobile was found guilty, forfeiture followed as a matter of course, regardless of the rights of the bank under its mortgage, and that, if this position is not correct, still, as the trial court forfeited the automobile and the evidence is not in the record, we must presume that there was evidence that the bank knew or had good reason to know the use to which the automobile was being put. This last contention, of course, is inadmissible, for the reason that the court found that the bank had a valid lien upon the automobile, and, if we indulge in any presumption as to the connection of the bank with the introduction of the liquor into the Indian country, we must presume, in the absence of any evidence or finding to the contrary, that the bank had nothing to do with it.

Counsel for the bank claim that the statute above quoted simply forfeits the interest of the introducer of the spirituous liquor in the automobile; therefore, it not appearing that the bank had anything to do with the introduction of the liquor, its interest could not be forfeited. The United States District Court for the District of Montana in the case of United States v. Two Gallons of Whisky et al., 213 Fed. 986, decided that the above statute could not be held to forfeit property which had been borrowed by the person who introduced the liquor into the Indian country; the owner of the property not having any knowledge or information as to the use to which the property was to be put. United States v. 246 Pounds of Tobacco (D. C.) 103 Fed. 791.

In cases under revenue statutes a mortgagee is regarded with greater favor than the owner. United States v. Two Barrels Whisky, 96 Fed. 497, 37 C. C. A. 518. Where a smuggling statute authorized the forfeiture of any vessel "whose master should knowingly violate the act," it was held that a master of a vessel, who was appointed by less than a majority of the ownership of the vessel, could not, by violating the law, subject the majority interest to forfeiture. The Calypso, 230 Fed. 962, 145 C. C. A. 156. In United States v. 372 Pipes of Spirits, 5 Sawyer, 421, Fed. Cas. No. 16,505, under a statute which authorized the forfeiture of "spirits owned by such person," it was decided that a mortgagee would be protected to the extent of his debt. In United States v. Stowell, 133 U. S. 1, 10 Sup. Ct. 244, 33 L. Ed. 555, it was decided that the interest of the mortgagee on realty upon which an illicit still had been established would not be forfeited, where the mortgage was taken prior to the establishment of the still. It is also a principle of law and natural justice that statutes will not be held to forfeit property, except for the fault of the owner or his agents, unless such a construction is unavoidable. Peisch v. Ware, 4 Cranch, 347, 2 L. Ed. 643; United States v. 33 Barrels of Spirits, 1 Abb. U. S. 311, Fed. Cas. No. 16,470; Clinkenbeard v. United States, 21 Wall. 65, 22 L. Ed. 477.

There are cases cited upon other statutes which seem to support the contention of counsel of the United States, but we think justice requires us to adopt the view presented by counsel for the bank. An examination of the decisions under different statutes of the United States providing for the forfeiture of property shows that there are

Digitized by Google

two classes of statutes, one authorizing forfeiture irrespective of ownership, and the other making ownership of the wrongdoer a necessary element. Heidritter v. Elizabeth Oil Cloth Company (C. C.) 6 Fed. 138, affirmed 112 U. S. 294, 5 Sup. Ct. 135, 28 L. Ed. 729.

It is contended by counsel for the United States that the words "of such person" in the above statute, occurring after the word "peltries," by all rules of grammatical construction relate to the last antecedents, which are "goods," "packages," and "peltries," and do not relate back to boats, teams, wagons, and sleds; therefore the statute, so far as the words "boats," "teams," "wagons," and "sleds" are concerned, does not limit the forfeiture to the interest therein of the introducer of the spirituous liquor; while counsel for the bank claim that the words "of such person," where they appear after the word "peltries," have the same significance as they do in the previous part of the law following the words "places of deposit," and therefore the law only provides for the forfeiture of the property of the person who has introduced or is about to introduce spirituous liquor into the Indian country, and that when this meaning is given to the statute it excludes from forfeiture the special interest of the bank under its mortgage.

The decision of the question presented is not free from difficulty, but, taking into consideration the fact that the law is highly penal, and that before the property of a citizen may be confiscated a case clearly within the letter and spirit of the law must be made, we do not think it was the intention of the law to forfeit the interest of the bank in the automobile. We also are of the opinion that the words "of such person," where they occur in the law after the word "peltries," relate as well to the words, "boats, teams, wagons, and sleds" as to the words "goods, packages, and peltries." We are confirmed in this construction of the law, we think, by a paragraph in the law making appropriations for the current contingent expenses of the Bureau of Indian Affairs, approved March 2, 1917 (39 Stat. 969, c. 146) which reads as follows:

"For the suppression of the traffic in intoxicating liquors among Indians, $150,000: Provided, that *automobiles or any other vehicles or conveyances* used in introducing, or attempting to introduce, intoxicants into the Indian country, or where the introduction is prohibited by treaty or federal statute, whether used by the *owner thereof or other person*, shall be subject to seizure, libel, and forfeiture provided in section 2140 of the Revised Statutes of the United States."

The enactment of this law by Congress was a legislative declaration that in the opinion of Congress section 2140, as it read when the seizure in this case was made, did not authorize the seizure and forfeiture of any of the articles mentioned in section 2140, except those owned by the guilty party.

[5] There is another view of the law, not discussed by counsel, which makes it doubtful if an automobile comes within the language of the statute wherein it specifies those articles which may be forfeited. As we have said before, the statute is highly penal, and not in aid of the revenues. It must be, therefore, strictly construed, and all doubts resolved in favor of those against whom it is invoked. The statute specifies that boats, teams, wagons, and sleds may be forfeited. An

Digitized by Google

automobile is not a boat, a team, or a sled. Is it a wagon? The statute was enacted March 15, 1864 (13 Stat. 29, c. 33 [Comp. St. 1916, § 4136a]). At that time automobiles as a means of transporting passengers or freight were unknown; hence there can be no claim that Congress intended to include automobiles when it used the word "wagons." Automobiles have not been denominated, either by the public or lexicographers, as wagons. A wagon is drawn by a force outside of itself. An automobile, as its name suggests, is its own propeller. According to the letter of the law, an automobile is not within its terms. It was evidently to remedy this defect that the language above quoted from the act of March 2, 1917, was enacted. It makes the law read so as to include automobiles or any other vehicles or conveyances. Congress, when it enacted section 2140, could have used the word "vehicles," or conveyances, in general terms, so as to include all means of transportation. It did not choose to do so, but specified certain vehicles by name, and thereby, we think, excluded other kinds of conveyances.

[6] We are of the opinion that the bank is entitled to raise this question on the present record, as the findings do not support the judgment. Carrying out the theory on which the action was tried below, it results that the judgment rendered against the bank must be reversed, and the case remanded, with directions to pay over the proceeds resulting from the sale of the automobile to the bank in partial satisfaction of its mortgage; and it is so ordered.

(249 Fed. 588)

THE SAN GUGLIELMO.

(Circuit Court of Appeals, Second Circuit. March 13, 1918.)

Nos. 199-201.

1. SHIPPING ⟹142—DAMAGE TO CARGO—NOTICE OF CLAIM.

Where a bill of lading declared that the steamship owner should not be liable for any loss or damage or claim of which notice was not given before removal of the goods, it was not sufficient that the attention of the captain in one case, and of persons on the wharves directing or supervising the discharge of the cargo in another, was called to the fact that goods were damaged, for, if that were allowed, loose talk of truckmen would be enough to defeat the exception.

2. SHIPPING ⟹142—DAMAGE TO CARGO—NOTICE OF CLAIM.

Though a bill of lading declared that the steamship owner should not be liable for any claim of which notice was not given before removal of the goods, consignees, who removed part of the goods without notice, may recover for damage to other goods, which were left on the wharf and later were destroyed by the board of health.

3. SHIPPING ⟹132(5)—ACTIONS—EVIDENCE—SUFFICIENCY.

Evidence *held* insufficient to show that one of several libelants, who asserted injuries to a shipment of goods, gave detailed particulars of his claim as required by the bill of lading, but to warrant a finding that no such particulars were given.

Hough, Circuit Judge, dissenting.

⟹For other cases see same topic & KEY-NUMBER in all Key-Numbered Digests & Indexes

Digitized by Google

Appeals from the District Court of the United States for the Southern District of New York.

Libel by Jacob A. Kirsch against the steamship San Guglielmo, etc., claimed by Pierce Bros., Incorporated, together with libels by Nathan Kronman & Co. and P. Pastene & Co., Incorporated, against the same vessel. From decrees for libelants (241 Fed. 969), claimant appeals. Modification of decrees directed.

Kirlin, Woolsey & Hickox, of New York City (M. W. Maclay, Jr., and John M. Woolsey, both of New York City, of counsel), for appellant.

Henry L. Franklin, of New York City (Frank V. Barns, of New York City, of counsel), for appellees.

Before WARD, ROGERS, and HOUGH, Circuit Judges.

WARD, Circuit Judge. These are suits in admiralty by consignees of various shipments of garlic, peppers, and oregano in baskets and tomatoes in cans by the steamer San Guglielmo from Naples to New York, receipted for in the bill of lading as in apparent good order and condition, but delivered damaged. The libel alleged that the damage was due, not to perils excepted in the bill of lading, viz. heating, * * * decay, * * * sweat, * * * or any loss arising from the nature of the goods," but to negligent stowage, and particularly to want of proper ventilation for the large quantity of the goods carried in deep tank No. 4.

[1, 2] The answer denied these allegations and attributed the damage to vice propre and also relied upon the following clause in the bill of lading:

"5. Also that the steamship owner shall not be liable * * * for any claim, however arising, of which notice is not given before removal of the goods and amount and particulars of claim given within eight days after receipt of goods."

Libelants removed some of the goods and left some on the wharf, which were afterwards destroyed by the board of health. Kirsch and Pastene made detailed claim within eight days after removal upon the managers and general agents of the steamer, but Kronman failed to prove any detailed claim. Judge Mayer found that the libelants had sustained the burden which lay upon them, in view of the exceptions in the bill of lading, of proving that the damage had been caused by negligent stowage and lack of proper ventilation, and we agree with him.

He also held that the libelants Kirsch and Pastene had made claim before removal of the goods, because the attention of the captain in one case, and of persons on the wharf directing or supervising the discharge of cargo in the other, was called to the fact that the goods were damaged. We think this no proof of making claim. Loose talk of truckmen would be enough to defeat the exception. It seemed to the District Judge, however, to satisfy our ruling in the case of The Persiana, 185 Fed. 396, 107 C. C. A. 416. The provision in that case was weaker than the one under consideration, in that it only called for notice of damage, viz. that the owners should not be liable "for any

Digitized by Google

damage to any goods * * * notice of which is not given before the removal of the goods." The District Judge held (156 Fed. 1019, 1021) that the libelants "gave notice as soon as they learned of the damage and of the damage which was already known to the claimants or their agents, and did this while the vessel was still unloading." The bill of lading in this case expressly requires notice of claim for the damage which necessarily extends and goes beyond notice of damage. Still we held in The Persiana that it must be given before removal, even if the carrier already had knowledge of the damage. The stipulation was a part of the contract, and the libelants could not recover without showing compliance with it. The fact that the carrier knew of the damage did not alter the case.

The District Judge applied to this case the reasoning which was overruled in The Persiana. He said:

"It would certainly involve a technical construction beyond all reasonable limits to say that this provision in the bill of lading placed upon the consignee the duty of giving some kind of formal notice in formal language to the appropriate representatives of the vessel or its owners. Of course, there may be many instances where it may be claimed that a few boxes or bales of a shipment were damaged, while the great bulk of the shipment is in good condition, and, in such cases, a casual observation by a consignee or his agents or employés to some minor employé of the steamship owners would not be compliance with this provision of the bill of lading. That, however, is not this case. The talks of Kirsch and the drivers of Kronman and Pastene were respectively with the captain of the vessel and the superintendent of the steamship company, and concerning goods known without question by these men to be in bad condition. The fact that the captain and the superintendent answered indifferently is a matter of no consequence. It seems to me that the conversations, as related in the record in all the circumstances there disclosed, constituted the notice required by the bill of lading, and any other conclusion would make a mockery of this provision and torture it into an instrument for the most indefensible kind of evasion by technicality, instead of a fair and reasonable protection to the shipowner."

The Circuit Court of Appeals for the Third Circuit in The St. Hubert, 107 Fed. 727, 46 C. C. A. 603, and The Westminster, 127 Fed. 680, 62 C. C. A. 406, and for the Fifth Circuit in Unione Austriaca, etc., v. Leon G., 231 Fed. 427, 145 C. C. A. 421, has construed this precise clause in exactly the same way as we have done, viz., as a condition precedent requiring notice of claim, failure to comply with which defeats recovery. In the case of The Queen of the Pacific, 180 U. S. 49, 21 Sup. Ct. 278, 45 L. Ed. 419, decided before any of the foregoing cases, a similar construction was applied to a stipulation in a bill of lading that claims for damage to merchandise must be presented within thirty days from the date of the bill of lading. There the vessel within 2 days from that date filled, sank, and lay in a helpless condition for 3 days, so that the fact of damage must have been known to the owners. The court observed that the provision might not reasonably apply to foreign voyages because the damage could well occur more than 30 days after the date of the bill of lading, and, whether it did or not, without knowledge of the goods owner of the fact until after that time.

We cannot alter the contract of the parties because the result seems to be hard, but we should construe it strictly in favor of the goods

Digitized by Google

owner. For this reason we agree with the District Judge that it only applies when he removes the goods. For such of the goods left by the libelants on the wharf as were destroyed by the board of health, and for such only, they are entitled to recover.

[3] The libelant Kronman attempted to prove detailed notice of his claim by a carbon copy of a letter addressed to the claimant's agents and the course of business in his office as to the mailing of letters. The clerk whose duty it was to mail letters was not in libelant's employment at the time of trial, and her address was not known. On the other hand, the claimant produced the detailed claim of the other libelants, proved the course of business as to opening and filing letters received, and proved that no such letter was in its files. The District Judge quite correctly held that this proof was more convincing than was the libelant's.

The court below is directed to modify the decrees in accordance with this opinion.

HOUGH, Circuit Judge (dissenting). The point insisted on by the majority seems to me most frankly put in The Westminster, 127 Fed. 681, 62 C. C. A. 406, where it is said:

> "The notice stipulated for is not of the fact of damage, * * * but of the intent to hold the carrier liable for it, which, on failure to give notice, the latter, in view of the stipulation, may well regard as being waived."

Taking cognizance of the methods, and the only possible methods, of receiving most cargo from most ships (and the San Guglielmo in particular), the majority hold in substance that a shipper's right to recover for obviously damaged cargo depends on whether a carter or driver is able nicely to distinguish between notice of fact of damage, and notice of claim for damage. If he takes away the goods without using the correct legal formula, his employer's rights are gone.

From this doctrine and the decision applying it I dissent, believing that the only justification for the attempted limitation of carrier's liability is that the carrier is reasonably entitled to knowledge of demands that may be made; more than that is unreasonable. Nor do I think that The Queen of the Pacific, supra, requires or supports the present ruling. The test of reasonableness is there laid down, and that criterion, if applied here, would result in affirmance of decree.

Digitized by Google

(249 Fed. 592)

OKLAHOMA, K. & M. I. RY. CO. v. BOWLING.

(Circuit Court of Appeals, Eighth Circuit. March 9, 1918.)

No. 5026.

1. STATES ⟹9—TERRITORIES ⟹11—AUTHORITY OF CONGRESS—EFFECT OF ADMISSION.

Before territories are admitted to statehood, Congress exercises as to them the combined powers of the national and state governments; but, when a territory is admitted to the Union as a state, it stands on the same footing as the original 13 states, with supreme authority as to all matters of internal government and local concern, subject only to the limitations of the federal Constitution, and statutes enacted for the territory upon subjects of state cognizance are automatically abrogated.

2. STATES ⟹9—STATUTES—INDIAN TERRITORY.

Act Feb. 28, 1902, c. 134, 32 Stat. 43, authorizes any railroad company to take and condemn a right of way in or through any lands held by any Indian tribe or nation, person, individual, or municipality in the Indian Territory, or in and through any lands whch have been or may hereafter be allotted in severalty, whether the same have or have not been conveyed with full power of alienation. Oklahoma was in 1907 admitted as a state. Act May 27, 1908, c. 199, 35 Stat. 312, relating to the removal of restrictions on the lands of Indian allottees, declares in section 1 that "no restriction of alienation shall be construed to prevent the exercise of the right of eminent domain in condemning rights of way for public purposes over allotted lands, and for such purposes" the sections of the 1902 act on that subject "are hereby continued in force in the state of Oklahoma." *Held*, that the admission of Oklahoma as a state abrogated the act of 1902 as to lands in the Indian Territory, which had been conveyed by the Indian allottees after the restrictions on alienation had expired, and by the 1908 act the procedure prescribed by the 1902 act for the exercise of the right of eminent domain was preserved only so far as it affected Indian lands, including those allotted, but still subject to restrictions against alienation.

3. EMINENT DOMAIN ⟹20(1)—INTERSTATE COMMERCE.

Act Feb. 28, 1902, and Act May 27, 1908, relating to Indian lands, are not a grant of authority to railroads, engaged, or organized to engage, in interstate commerce, to appropriate private property in the state of Oklahoma, but are limited to Indian lands.

4. APPEAL AND ERROR ⟹70(5)—ORDERS APPEALABLE.

An order denying a motion to dismiss plaintiff's petition, not followed by decree disposing of the case, is not appealable.

Appeal from the District Court of the United States for the Eastern District of Oklahoma; Ralph E. Campbell, Judge.

Suit by George E. Bowling against the Oklahoma, Kansas & Missouri Interurban Railway Company. From an order of temporary injunction, defendant appeals. Affirmed.

Edward R. Jones, of Muskogee, Okl., and Ephraim H. Foster, of Oklahoma City, Okl., for appellant.

H. H. McCluer and Roland Hughes, both of Kansas City, Mo. (Vern E. Thompson, of Miami, Okl., on the brief), for appellee.

Before HOOK, CARLAND, and STONE, Circuit Judges.

HOOK, Circuit Judge. This is an appeal by the railway company from an order of temporary injunction at the suit of George E. Bowl-

⟹For other cases see same topic & KEY-NUMBER in all Key-Numbered Digests & Indexes

Digitized by Google

ing. It involves the validity of condemnation proceedings to take lands for railroad purposes under Act Feb. 28, 1902, c. 134, 32 Stat. 43, commonly called the Enid & Anadarko Act. The lands are in that part of the state of Oklahoma that was formerly Indian Territory. The proceedings were begun by the company after the admission of the state, in the United States District Court for the Eastern Judicial District, as successor to the jurisdiction of the United States Courts in the Indian Territory. The precise question is whether the act of 1902, aided by a later act to which reference will be made, continued to apply to lands like those of the plaintiff after the territory became a part of the state.

The lands had been tribal property of the confederated Wea, Peoria, and other tribes of Indians, had been allotted in severalty, and after the expiration of all restrictions upon alienation had been conveyed to and become the property of the plaintiff, a citizen of Missouri. The Indian title and interest had wholly ceased. The act of 1902 authorized any railroad company to take and condemn a right of way, etc., "in or through any lands held by any Indian tribe or nation, person, individual, or municipality in said territory, or in or through any lands in said territory which have been or may hereafter be allotted in severalty to any individual Indian or other person under any law or treaty, whether the same have or have not been conveyed to the allottee, with full power of alienation." Section 13. After Oklahoma was admitted as a state, in 1907, Congress adopted Act May 27, 1908, c. 199, 35 Stat. 312, relating to removal of restrictions from part of the lands of Indian allottees. The railway company points to the following provision of that act:

"No restriction of alienation shall be construed to prevent the exercise of the right of eminent domain in condemning rights of way for public purposes over allotted lands, and for such purposes" the sections of the act of 1902 on that subject "are hereby continued in force in the state of Oklahoma." Section 1.

Upon this it is argued that all lands in what was formerly the Indian Territory were either allotted or unallotted, that the lands of plaintiff fell in the former class, and that Congress not only had the power, but manifested its intention, to continue the condemnation provisions of the act of 1902 as to them, notwithstanding the fact that the Constitution and laws of the state of Oklahoma contained full provisions regarding the condemnation of lands for railroad purposes and subjected such proceedings to the jurisdiction of the state courts.

[1] The authority of Congress over the territories of the United States is a familiar feature of our history. Before they are admitted to statehood it exercises as to them the combined powers of the national and state governments by direct legislation, and also through local legislative bodies whose acts are subject to its supervision, or, as was the case with the Indian Territory, by extending thereto certain of the laws of an organized state. But when a territory is admitted into the Union as a state it stands in every respect upon the same footing as the original 13 states, with supreme authority as to all matters of

Digitized by Google

internal government and local concern subject only to the limitations of the federal Constitution. Coyle v. Oklahoma, 221 U. S. 559, 31 Sup. Ct. 688, 55 L. Ed. 853. Upon attaining statehood the statutes enacted for the territory upon subjects of state, as distinguished from federal, cognizance are automatically abrogated, except so far as they may be affirmatively continued to prevent an interregnum or hiatus. Benner v. Porter, 9 How. 235, 13 L. Ed. 119; Escanaba Co. v. Chicago, 107 U. S. 678, 688, 2 Sup. Ct. 185, 27 L. Ed. 442. An instance of legislation for a territory that took on a double aspect is presented by Act March 1, 1895, c. 145, 28 Stat. 693, prohibiting the carrying of intoxicating liquor into the Indian Territory. The subsequent Oklahoma Enabling Act and the admission of the state operated by implication to repeal it as to such commerce wholly within the boundaries of the new state, but left it in force as to the commerce that was interstate. The authority for the survival of the latter phase of the statute rested in the power of Congress over commerce among the states and with the Indian tribes and in the peculiar relation and continuing responsibilities of the federal government towards the Indians and their lands. Ex parte Webb, 225 U. S. 663, 32 Sup. Ct. 769, 56 L. Ed. 1248; United States v. Wright, 229 U. S. 226, 33 Sup. Ct. 630, 57 L. Ed. 1160. But, as already observed, as to those things that were within the power of the sovereign state the statute fell.

[2] The act of 1902 prescribed a procedure for the exercise of the right of eminent domain and by its terms applied to all lands in the Indian Territory, regardless of Indian title. This was naturally so, because there was then no other competent legislative authority than Congress. But the comprehensive scope of the legislation did not survive the admission of the state. By the act of 1908 Congress merely sought to preserve it so far as it affected Indian lands including those that had been allotted but were still subject to restrictions against alienation. That was the extent of its interest during statehood. The power of Congress to legislate ends when the transitory character of the subject-matter ceases to be of federal concern.

[3] It is also urged by the railway company that the application of the statute to the plaintiff's lands should be sustained as a regulation of interstate commerce. Assuming, without consideration, that Congress might under the power indicated authorize railroads engaged or organized to engage in such commerce to appropriate private property within the states, prescribe a procedure therefor, and confer jurisdiction of the proceedings upon the courts of the United States, it would take a plainer case than the one here to indicate its intention to do so. The obvious, apparent reason for the continuance of the legislation in question during statehood is in the peculiar character of the tenure of a particular class of lands, and when that ceases the laws of the state attach and are exclusive.

[4] An appeal has also been taken from an order denying a motion to dismiss the plaintiff's petition. The order was not followed by a decree disposing of the case, and is not appealable.

The order of injunction is affirmed.

Digitized by Google

(249 Fed. 595)

COUTS v. UNITED STATES.

(Circuit Court of Appeals, Eighth Circuit. March 4, 1918.)

No. 4992.

1. CONTEMPT ⟹66(3) — REVIEW — PRESENTATION OF QUESTIONS IN COURT BELOW.

Where not raised in the lower court, the objection that the evidence was insufficient to warrant a finding that defendant was guilty of contempt cannot be raised on writ of error.

2. CONTEMPT ⟹66(6½)—REVIEW—ERRORS NOT ASSIGNED.

Where an information charging contempt was not attacked in the court below, and there was no assignment of error that it did not state facts sufficient to constitute a contempt, objections to the information, which are not plain, but are of a technical character, cannot be considered under rule 11 (150 Fed. xxvii, 79 C. C. A. xxvii), allowing the Circuit Court of Appeals to consider a plain error not assigned.

3. JURY ⟹25(2)—CONTEMPT—PROCEEDINGS—DEMAND FOR JURY TRIAL.

Act Cong. Oct. 15, 1914, c. 323, § 21, 38 Stat. 738 (Comp. St. 1916, § 1245a), declares that any person who shall willfully disobey any lawful writ, process, order, decree, or command of the District Court, if the act or thing so done by him shall be of such character as to constitute a criminal offense under any statute of the United States or laws of the state in which the act was committed, shall be proceeded against for contempt. Section 22 (Comp. St. 1916, § 1245b) declares that in all cases within the act trial may be by the court, or upon demand of the accused by a jury, while section 24 (Comp. St. 1916, § 1245d) declares that nothing in the act shall be construed to relate to contempts committed in the presence of the court, or so near thereto as to obstruct the administration of justice. Defendant, for an attempt to influence a juror as to his verdict, was punished under Judicial Code (Act March 3, 1911, c. 231) § 268, 36 Stat. 1163 (Comp. St. 1916, § 1245), making misbehavior so near the court as to obstruct the administration of justice a contempt, although his act was a criminal offense both under Penal Code (Act March 4, 1909, c. 321) § 135, 35 Stat. 1113 (Comp. St. 1916, § 10305), as well as the laws of the state in which the court was sitting. *Held* that, though defendant was adjudged guilty on hearing to the court without a jury, he cannot complain that he was denied a jury trial on the theory that section 24, Act of 1914, was invalid as class legislation, for sections 21 and 22 do not cover contempts of the class of which defendant was found guilty, and further the record showed no demand by defendant for jury trial.

In Error to the District Court of the United States for the Western District of Missouri; Arba S. Van Valkenburgh, Judge.

James F. Couts was found guilty of contempt under Judicial Code, § 268, on an information filed by the United States attorney upon leave granted, and brings error. Affirmed.

Battle McCardle, of Kansas City, Mo. (Frank L. Barry, of Kansas City, Mo., on the brief), for plaintiff in error.

Sam O. Hargus, Asst. U. S. Atty., of Kansas City, Mo. (Francis M. Wilson, U. S. Atty., of Kansas City, Mo., on the brief), for the United States.

Before SANBORN, CARLAND, and STONE, Circuit Judges.

⟹For other cases see same topic & KEY-NUMBER in all Key-Numbered Digests & Indexes

Digitized by Google

CARLAND, Circuit Judge. Upon leave granted, the United States attorney for the Western district of Missouri filed an information in the court below charging the plaintiff in error, hereafter called defendant, with the commission of certain acts which it was alleged constituted a contempt of said court. Without making any objection to the information filed against him, the defendant entered a plea of not guilty. After a hearing by the court he was found guilty of the contempt charged and sentenced to imprisonment for the period of 60 days in the common jail of Jackson county, Mo.

[1, 2] Assignments of error Nos. 1, 2, 3, 4, and 5 present the question as to whether the evidence was sufficient to justify the finding and judgment of the court. As this question was in no wise raised during the trial, it may not be considered. The information was not attacked in the court below, and there is no assignment of error that it does not state facts sufficient to constitute a contempt. We are asked, however, to consider objections made here to the information under rule 11 of this court, providing that we may at our option notice a plain error not assigned. There are two reasons why we should not do this in the present case: First, the alleged errors are not plain; and, second, they are of a technical character.

[3] The defendant further alleges that he was found guilty and punished for misbehavior so near the court as to obstruct the administration of justice under section 268 of the Judicial Code; that the act for which he was punished (attempt to influence a juror as to his verdict in a case on trial) is a criminal offense under section 4356, Revised Statutes of Missouri, and section 135 of the Penal Code of the United States; that by sections 21, 22, and 24 of the Act of Congress of October 15, 1914 (38 Stat. 730, c. 323), it is provided as follows:

"Sec. 21. That any person who shall willfully disobey any lawful writ, process, order, rule, decree, or command of any District Court of the United States, or any court of the District of Columbia by doing any act or thing therein, or thereby forbidden to be done by him, if the act or thing so done by him be of such character as to constitute also a criminal offense under any statute of the United States, or under the laws of any state in which the act was committed, shall be proceeded against for his said contempt as hereinafter provided.

"Sec. 22. [Paragraph 2] In all cases within the purview of this act such trial may be by the court, or, upon demand of the accused, by a jury; in which latter event the court may impanel a jury from the jurors then in attendance, or the court or the judge thereof in chambers may cause a sufficient number of jurors to be selected and summoned, as provided by law, to attend at the time and place of trial, at which time a jury shall be selected and impaneled as upon a trial for misdemeanor; and such trial shall conform, as near as may be, to the practice in criminal cases prosecuted by indictment or upon information. * * *

"Sec. 24. That nothing herein contained shall be construed to relate to contempts committed in the presence of the court, or so near thereto as to obstruct the administration of justice, nor to contempts committed in disobedience of any lawful writ, process, order, rule, decree, or command entered in any suit or action brought or prosecuted in the name of, or on behalf of, the United States, but the same, and all other cases of contempt not specifically embraced within section 21 of this act, may be punished in conformity to the usages at law and in equity now prevailing."

Digitized by Google

On this state of the record, in connection with the act of Congress above quoted, counsel for defendant contends that he was, in some way not easily understood, deprived of a trial by jury. The argument in support of the contention is this: A person proceeded against for contempt under sections 21 and 22, above quoted, is entitled upon demand to a trial by jury. By section 24, above quoted, a person prosecuted for a contempt such as was charged against defendant, is not entitled to a jury trial; therefore the law contained in the above three sections is void, as class legislation and discriminatory against defendant, the classification being arbitrary, and not based upon any reasonable ground.

Assuming, but not deciding, that there is in the Constitution of the United States provisions which would strike down the sections above quoted for the reasons stated, it would not help the defendant, as it is conceded that there then would be no law providing for a jury trial in contempt cases; but counsel ask us to strike down section 24, above quoted, as that is the section which causes the discrimination, and then elevate him into sections 21 and 22. If this were done, however, still the defendant would not be benefited for two reasons. Sections 21 and 22, without section 24, do not cover the kind of contempt charged against him, and, if they did, a jury trial is only granted upon demand, and the record does not show that any such demand was made. It thus appears that the constitutional question is a mirage; nothing more.

The judgment below is affirmed.

(249 Fed. 597)

NULOMOLINE CO. v. STROMEYER.

(Circuit Court of Appeals, Third Circuit. March 4, 1918. Rehearing Denied April 9, 1918.)

No. 2305.

INJUNCTION ⟹56—SUBJECTS OF PROTECTION—USE OF TRADE SECRETS.

A complainant *held* entitled on the evidence to an injunction to restrain defendant, a competing manufacturer of invert sugar, from using in his business the secret process of complainant, disclosed to him by a former employé of complainant in violation of his contract of employment.

Appeal from the District Court of the United States for the Eastern District of Pennsylvania; Oliver B. Dickinson, Judge.

Suit in equity by the Nulomoline Company against Julius Stromeyer. Decree for defendant, and complainant appeals. Reversed and remanded.

For opinion below, see 245 Fed. 195.

Leo Levy, of New York City, and Chester N. Farr, Jr., of Philadelphia, Pa., for appellant.

James F. Ryan and Michael J. Ryan, both of Philadelphia, Pa., for appellee.

⟹For other cases see same topic & KEY-NUMBER in all Key-Numbered Digests & Indexes

Digitized by Google

Before BUFFINGTON, McPHERSON, and WOOLLEY, Circuit Judges.

McPHERSON, Circuit Judge. Our examination of this voluminous record, containing more than 1,000 printed pages, has convinced us that the bill should not have been dismissed. The opinion of the District Judge is reported in 245 Fed. at page 195, and we agree that the controversy is one of fact. Moreover, it seems to us to lie within narrow limits, and we think what is now relevant may be fairly summarized as follows:

In November, 1910, Maxwell Tausek entered the direct employment of the Nulomoline Company, a manufacturer of invert sugar, and agreed, inter alia, that he would not—

"* * * engage in any other business whatsoever; that he will perform such duties as may be assigned to him during the course of the employment herein provided for. [He] covenants and agrees that any and all knowledge or information that may be obtained by him in the course of the employment with respect to the conduct and details of the business and with respect to the secret processes, formulas, machinery, utensils, and arts used by the employer in manufacturing its products, will be by him forever kept inviolate and be by him concealed from any competitor and all other persons, and that he will not engage as employer, employé, principal, agent, or otherwise, directly or indirectly, at any time hereinafter in a similar business, and that he will not impart the knowledge by him acquired of the said secret processes, formulas, machinery, utensils, and arts of manufacture of the employer to anybody whomsoever, and that, should he at any time leave the employ of the employer, he hereby covenants and agrees that he will not in violation of its terms enter into the employ or service or otherwise act in aid of the business of any rival company or concern or individual engaged in the same or in similar lines of business; and, if he does so in violation hereof, the employer shall be entitled to an injunction by any competent court of equity enjoining and restraining [him] and each and every other person concerned thereby from continuance of such employment, service, or other act in aid of the business of such rival company or concern. Nothing herein contained shall prevent [him] upon the termination of the employment, in engaging in any occupation in which the processes, formulas, and other secrets of the employer will not be directly or indirectly involved."

Early in 1915 Tausek was discharged, and later in the year he entered into business relations with Julius Stromeyer, the defendant; these relations continuing for a number of months thereafter. The plaintiff charges that during this period Tausek disclosed to Stromeyer the secret process by which Nulomoline was made, and that Stromeyer used the knowledge so obtained in order to make and sell Nulomoline (although under another name), thereby seriously injuring the plaintiff's trade and inducing a number of its former customers to transfer their business either wholly or in part. The charge that Tausek made the disclosure has been sustained by the District Court, and in our opinion upon sufficient evidence. The learned judge finds as a fact (page 199) that:

"* * * Tausek did send to the defendant the names and addresses of buyers of products who had been customers of the plaintiff, and did inform the defendant of how the plaintiff made the product which these customers had been receiving."

Digitized by Google

Upon the other charge—that Stromeyer used this information and made Nulomoline by the plaintiff's process—the finding of the court below is in favor of Stromeyer:

"There is nothing beyond the fact that Tausek disclosed information to implicate the defendant in either its disclosure or its use. There is nothing to indicate that the defendant invited it and evidence that he somewhat testily repulsed Tausek's attempt to teach him the art."

But, without discussing the circumstantial evidence that indicates strongly an opposite conclusion, we are satisfied that such a conclusion should have been reached, and accordingly we find that Stromeyer was not only ready and willing to accept the disclosure offered by Tausek, but that he did act thereon and did employ the plaintiff's process by making the plaintiff's product. Just how far this improper conduct went, and to what extent Stromeyer should account, we cannot determine accurately on the evidence before us, but this matter may be left for future consideration upon such other evidence as may be offered. The decree to be entered should carefully preserve Stromeyer's right to make invert sugar in accordance with his own process—which he has apparently been using for many years—and also to preserve his right to promote the sale of his distinctive product in competition with Nulomoline. But he should be enjoined from making any future use of the information unlawfully obtained from Tausek concerning the manufacture of invert sugar by the plaintiff's process; and he should be compelled to account in respect of the Nulomoline (by whatever name) that he has already made and sold in the use of the information thus obtained. There may perhaps be difficulties in framing a decree that will preserve the defendant's right to his own product while protecting the right of the plaintiff, but this is not a sufficient reason for denying to the plaintiff the relief to which it is entitled.

We regard this record as unduly swollen by the appellant, both by its disregard of the equity rules, and by the inclusion of unnecessary matter, and we therefore direct that all the costs on this appeal be equally divided between the parties.

The decree is reversed, and the cause is remanded for further proceedings in accordance with this opinion.

Digitized by Google

(249 Fed. 600)

THE C. R. SHEFFER.

Appeal of SCHOONMAKER et al.

(Circuit Court of Appeals, Second Circuit. January 16, 1918.)

No. 105.

1. SHIPPING ⟹101—CHARTERS—COMMON OR "PRIVATE CARRIER."
A scow, contracting to carry a cargo to her full capacity, is not a common, but a private, carrier, and is bound only to the exercise of ordinary care and skill.
[Ed. Note.—For other definitions, see Words and Phrases, First and Second Series, Private Carrier.]

2. SHIPPING ⟹120—CHARTER OF SCOW—LIABILITY FOR INJURY TO CARGO.
A scow contracted to carry a cargo of brick to be delivered in shallow waters, in which she was liable to lie aground at low tide, but where, as a rule, the bottom was reasonably level and soft. She was shown to be in good condition and seaworthy, and had previously discharged cargoes in the same vicinity without injury. On the trip in question, owing to a gale, the water was at least two feet lower than usual, and where she discharged there was some obstruction, on which she settled, and which broke a hole in her bottom, causing her to fill and injure the cargo. *Held*, that such fact did not establish negligence which rendered her liable for the damage.

Appeal from the District Court of the United States for the Southern District of New York.

Petition in admiralty of John D. Schoonmaker and Jacob Rice, as owners of the barge C. R. Sheffer, for limitation of liability. From a decree holding the vessel liable for injury to a cargo, petitioners appeal. Reversed.

It is assumed without finding it as a fact, that the petitioners, Schoonmaker and Rice, as owners of the brick scow Sheffer, agreed with the Richmond Brick Company (claimant) to transport a full cargo of brick from Staten Island to the vicinity of Meserole street, Brooklyn (Newtown creek). It is not uncommon, if not ordinarily expected, that vessels frequenting shallow waters in this kind of harbor service will often lie aground while receiving and discharging cargo. The Sheffer was not old, and was well built and entirely seaworthy, when agreement made. During either loading or waiting to unload the Sheffer grounded at least once before January 6th and developed a leak, which was repaired. Beginning on January 5th a violent northwesterly gale prevailed over the harbor of New York, causing very low tides, and we consider it shown that the shallow waters of Newtown creek were by reason of this gale two or three feet lower than would ordinarily be the case. At about 4 o'clock on the afternoon of January 6th the Sheffer was examined and found to be free of water, except "four or five inches in her lowest corner," which for a wooden vessel of her class would not be "any water to figure on." The tide was then falling, the boat was aground or nearly so, and some hours later she was obviously as full of water as the tide permitted her to be. She was later discovered to have her bottom broken or pushed in over a considerable area, the wound displaying such characteristics that we find she must have rested upon a hard object while aground. Of course, the heavier the load and the shallower the water, the greater the likelihood that such injury would occur.

The Richmond Brick Company brought suit at law against Schoonmaker et al., for injury to their brick cargo whereupon the scow owners began this

Digitized by Google

proceeding, wherein the Brick Company appeared as answering claimant. The court below denied the right to limit, and awarded the claimant damages as upon a libel for breach of contact of carriage.

Hyland & Zabriskie, of New York City (Nelson Zabriskie, of New York City, of counsel), for appellants.

Charles E. Lydecker, of New York City, for appellee.

Before WARD and HOUGH, Circuit Judges, and LEARNED HAND, District Judge.

HOUGH, Circuit Judge (after stating the facts as above). [1] Assuming an agreement of carriage between scow owners and freighters, the appellants were not common carriers, for the Brick Company was given and used the full capacity of the scow, and therefore her owners were not common, but private, carriers; i. e., bailees to transport for hire. The Fri, 154 Fed. 333, 83 C. C. A. 205, certiorari denied 210 U. S. 431, 28 Sup. Ct. 761, 52 L. Ed. 1135; The Wildenfels, 161 Fed. 864, 89 C. C. A. 58.

[2] Therefore claimant was obliged when the original seaworthiness of the Sheffer was shown to prove some act of negligence, by which those private carriers became liable for cargo damage. It is claimant's contention that it was sufficient proof of negligence that the Sheffer lay upon the ground to her injury, or that, since brick scows often do lie aground, it was negligence not to provide a scow that could so rest on the bottom without injury to her cargo wherever she was lawfully sent. This in substance asserts that no brick scow is seaworthy—i. e., reasonably fit for her intended occupation—unless she can lie aground everywhere. This is going much too far. A private carrier, like other bailees for hire, is only bound to the exercise of ordinary care and skill—the reasonable skill of his calling.

It may be admitted that any vessel expected to lie aground must be reasonably fit for the contingencies of such an occupation; but it does not follow that she must therefore be strong enough to hold up a heavy cargo when an extraordinary January gale sweeps out at least two feet of water from accustomed mooring places, or that owners are bound to anticipate that in bottoms reasonably level and soft there may not be embedded hard objects that will puncture vessels resting against them. We consider it proven that the cause of damage to this vessel and her cargo was an unusual storm, which lowered the scanty waters of Newtown creek and caused the Sheffer to lie aground on a bottom for the most part notoriously soft and oozy, but which at the place where she lay contained some substance (possibly an old wreck or a dumped cargo) that broke in her bottom in an unusual and not to be anticipated manner. Therefore claimant has failed to show negligence, and petitioners have shown that they offered a seaworthy vessel for the service and exercised due diligence to keep her so.

The decree below is reversed, and cause remanded, with instructions to grant the prayer of the petition. Appellants will have costs in this court.

Digitized by Google

(249 Fed. 602)

MOLLER v. HERRING.

(Circuit Court of Appeals, Fifth Circuit. March 11, 1918.)

No. 3059.

CONTRACTS ⟹108(2)—CONSTRUCTION—VALIDITY.

Where, in the Galveston storm of 1915, a great quantity of cotton was washed from the island of Galveston to the mainland, an agreement entered into by defendant, who was the owner of 1,000 bales of cotton to pay plaintiff $10 per bale for each bale reclaimed, is not unlawful and void, as against good morals and public policy, or as tending to interfere with public justice, no suit having been instituted for the appointment of a receiver to take charge of all of the cotton, for any person having an interest in any of the cotton was at liberty to collect any part of it in order to conserve that interest.

Foster, District Judge, dissenting.

In Error to the District Court of the United States for the Southern District of Texas; Waller T. Burns, Judge.

Action by A. L. Moller against F. E. Herring. There was a judgment for defendant, and plaintiff brings error. Reversed and remanded.

Maco Stewart and Barret Gibson, both of Galveston, Tex., for plaintiff in error.

B. B. Stone, of Ft. Worth, Tex., for defendant in error.

Before WALKER and BATTS, Circuit Judges, and FOSTER, District Judge.

BATTS, Circuit Judge. Plaintiff in error, plaintiff below, alleged that about September 2, 1915, the defendant represented to him that on August 16, 1915, he had stored in the Galveston Cotton Compress and Warehouse at Galveston, more than 1,000 bales of cotton, which were washed away and lost in the storm of August 16–17, 1915, and that this cotton, together with a great deal of other cotton, had been carried from its place of storage and deposited on the prairie of the mainland; that the marks and brands had been obliterated and the identity of the cotton lost; that the defendant contracted with him to save and gather for the defendant as much as possible of the cotton, not to exceed 1,000 bales, and represented to him that he was entitled to regain possession of that amount of cotton, and agreed in writing that for each and every bale of cotton plaintiff might recover defendant would pay him $10 "f. o. b. cars." The plaintiff alleges that at the time the contract was made many persons were engaged in recovering and buying this lost and storm-damaged cotton. He further alleges that, upon the making of the contract, he hired teams and laborers, and began to gather up and haul to a safe place all the bales of cotton he could, and that he had so saved 578 bales, and placed them on board cars at Alta Loma. He alleges that, out of the 578 bales of cotton, 68 were delivered to and received by the defendant, and shipped by him away from Alta Loma. He further alleges that on September 3d a suit was instituted in the district court, wherein a receiver

Digitized by Google

was appointed to gather up and collect all unidentified storm-damaged cotton which had been deposited on the mainland in Galveston county, and that the receiver, on the 4th of September, demanded of this plaintiff the 510 bales of cotton collected by him for defendant. He refused to deliver this cotton to the receiver, whereupon he and the defendant Herring were impleaded, and the court directed that he and the defendant deliver the cotton to the receiver, which was thereupon done.

The defendant Herring filed a general demurrer and special exceptions to this petition, which the court sustained, and in the final judgment expressed the opinion "that the contract sued upon is unlawful and void, as against good morals and public policy, and as against the laws of the land, and as being and tending to be an interference with public justice and with this court." The cause was dismissed.

The statutes of Texas provide for compensation to persons who gather cotton under the conditions existing as the result of a storm. At the time this contract was entered into, a large quantity of cotton, perhaps in excess of 20,000 bales, had been swept from the places of storage on Galveston Island to the mainland. No action had been taken by any court with reference to the collection and preservation of this property. Any person having an interest in any of the cotton was certainly at liberty to collect any part of it, or all of it, in order to conserve this interest. The contract stipulated for a greater compensation than was provided by law; but it might, nevertheless, have been to the interest of Herring to pay for the collection of the cotton a sum in excess of what he would be allowed upon an adjustment of the rights of the parties. The rights of the other owners in the cotton could in no way be affected by the contract between Moller and Herring, but it was for Herring to determine what he was willing to pay that his property and rights might be preserved, and for Moller to determine whether he would accept this amount as compensation for his labor and expense. It is difficult to understand how this contract, entered into as it was before any suit had been instituted, could constitute an interference with public justice and with the court. It is also difficult to understand how this private arrangement between Moller and Herring could be, in any sense, against good morals and public policy. The contract could not have affected the rights of other owners in the cotton, and did not purport or undertake to affect these rights. Moller continued to carry out his contract, until he and Herring were compelled by the court to desist. He collected "as much as possible," and became entitled, for all collected under the terms of the contract, to $10 per bale. For the amount paid under the direction of the court in the receivership, defendant is entitled to a credit.

It may be that some of the special exceptions should have been sustained. But the ruling of the court was based upon the proposition that the contract was against "good morals and public policy." No possible amendment could have met the objection of the court. The judgment is reversed, and the cause remanded for proceedings not inconsistent herewith.

Reversed and remanded.

FOSTER, District Judge, dissents.

Digitized by Google

(249 Fed. 604)

ODELL et al. v. BARTON et al.

(Circuit Court of Appeals, Eighth Circuit. February 28, 1918.)

No. 4930.

FRAUDS, STATUTE OF ⟹119(1)—AGREEMENTS WITHIN—ENFORCEMENT UNDER THEORY OF DURESS.

Where purchasers of Arkansas lands contracted to resell the same, relying on the vendors' oral agreement to modify the original contract of sale, which was in writing, and the vendors declined to carry out the modification, whereupon the purchasers made a different agreement as to the lands resold, the latter agreement cannot be canceled and the oral agreement enforced on the theory of duress of property, for that would result in an indirect evasion of the statute of frauds.

Appeal from the District Court of the United States for the Eastern District of Arkansas; Jacob Trieber, Judge.

Suit by C. H. Odell and Arnold Kleiner against W. W. Barton and another. From a decree dismissing the complaint, plaintiffs appeal. Affirmed.

M. J. Manning, G. W. Emerson, and W. H. Donham, all of Little Rock, Ark., for appellants.

Thomas S. Buzbee, George B. Pugh, and H. T. Harrison, all of Little Rock, Ark., and George C. Lewis, of Stuttgart, Ark., for appellees.

Before HOOK and SMITH, Circuit Judges.

HOOK, Circuit Judge. Odell and Kleiner sued the Bartons for the enforcement of a credit on a contract for the purchase of property, to be effected by the vacation of a subsequent agreement between them, upon the ground that the agreement was obtained from plaintiffs by compulsion or duress of property. The trial court dismissed the complaint as insufficient, and the plaintiffs appealed.

The complaint states that the defendants Barton contracted in writing to sell plaintiffs about 3,680 acres of land and some personal property in Arkansas for $42,000, payable in five annual installments; defendants to retain possession until the first installment was paid. About four months afterwards, and before any payment was made, plaintiffs sought to sell a fourth of the lands to one Herman for other property, taken at $10,000, and Herman's installment notes for $22,000. Herman was to have a deed for his part of the land and was to secure his installment notes by a deed of trust thereon. Plaintiffs charge that, before executing the contract with Herman, defendants approved the transaction, agreed to make a deed direct to Herman, to accept $12,000 of his installment notes and $2,000 in cash, and to credit plaintiffs with the aggregate of $14,000; that plaintiffs and Herman then executed their contract, but that subsequently defendants refused to abide by the agreement, and would not deed to Herman on the conditions stipulated; that plaintiffs, having in the meantime bound themselves to Herman, were forced to make a second agree-

⟹For other cases see same topic & KEY-NUMBER in all Key-Numbered Digests & Indexes

Digitized by Google

ment with defendants, much less advantageous to themselves. This second agreement plaintiffs now seek to have vacated. The constraint or duress is charged as arising from defendants' violation of the first agreement and plaintiffs' situation with respect to Herman. The damage charged, so far as need be noted, was $11,000 in Herman's installment notes, which, by the second agreement, defendants exacted as a bonus for their consent, and which was not to be credited plaintiffs on the original purchase price of the land.

The rule invoked by plaintiffs, as expressed by the Supreme Court in Radich v. Hutchins, 95 U. S. 210, 24 L. Ed. 409, and applied in Lonergan v. Buford, 148 U. S. 581, 13 Sup. Ct. 684, 37 L. Ed. 569, is as follows:

"To constitute the coercion or duress which will be regarded as sufficient to make the payment involuntary, * * * there must be some actual or threatened exercise of power possessed, or believed to be possessed, by the party exacting or receiving the payment over the person or property of another, from which the latter has no other means of immediate relief than by making the payment. As stated by the Court of Appeals of Maryland, the doctrine established by the authorities is that 'a payment is not to be regarded as compulsory, unless made to emancipate the person or property from an actual and existing duress imposed upon it by the party to whom the money is paid.' Mayor and City Council of Baltimore v. Lefferman, 4 Gill (Md.) 425 [45 Am. Dec. 145]."

But there is a short and sufficient answer to plaintiffs' complaint. Their contract to sell Herman a part of the land, to which they seek to commit defendants, called for a deed from defendants to him, and for immediate possession. To neither of these were plaintiffs or Herman entitled under any written contract or engagement of the defendants. The first agreement regarding the sale to Herman, which plaintiffs say defendants made and then repudiated, and which they seek to have enforced, does not appear to have been in writing. It is not valid or enforceable against defendants under the Arkansas statute of frauds (Kirby's Dig. 1904, § 3654), and effect cannot be given it by applying the rule of compulsion or duress of property to the second agreement that was made and carried out. We do not say that, aside from the Arkansas statute, there is equity in plaintiffs' case. No payments other than promises have ever been made to defendants, either by plaintiffs or by Herman. The latter defaulted on his notes, and defendants have had to resort to foreclosure against all of them to regain their title.

The decree is affirmed.

Digitized by Google

(249 Fed. 606)

In re DITTMAR.

Petition of SCHULTZ.

(Circuit Court of Appeals, Third Circuit. March 29, 1918.)

No. 2332.

1. BANKRUPTCY ⟹400(1)—EXEMPTIONS—ALLOWANCE.
As a claim for exemption is sufficient, if made generally under the exemption laws of the state, an order allowing a Pennsylvania bankrupt shares of corporate stock as part of his exemption will not be reversed, because the bankrupt claimed the same under Act Pa. April 9, 1849 (P. L. 533), although the act really allowing the exemption was that of April 8, 1859 (P. L. 425); it being common to refer to exemptions under act of 1849, though amendments and supplements be intended.

2. BANKRUPTCY ⟹400(1)—EXEMPTIONS—EFFECT.
Where a voluntary bankrupt claimed as exempt property which had been attached in proceedings in the state court brought by the judgment creditor before the filing of the petition, it is proper for the bankruptcy court, the state statute declaring the property exempt, to set it apart to the bankrupt; the order not affecting the attachment, but leaving the property subject to the lien of the attachment, if any.

Petition to Revise from the District Court of the United States for the Eastern District of Pennsylvania; Oliver B. Dickinson, Judge.

In the matter of the bankruptcy of Frederick Dittmar. On petition by Howard M. Schultz to revise an order setting aside certain corporate stock to the bankrupt as part of his exemptions. Order affirmed.

Jacob Weinstein, of Philadelphia, Pa., for petitioner.

Samuel Galt Birnie, of Philadelphia, Pa., for respondent.

Before BUFFINGTON, McPHERSON, and WOOLLEY, Circuit Judges.

McPHERSON, Circuit Judge. In March, 1916, the petitioner, Howard M. Schultz, obtained a judgment against Frederick Dittmar in the common pleas of Philadelphia county, and in July issued an attachment execution thereon and summoned the Penn Surgical Manufacturing Company, as garnishee. On September 14, in response to interrogatories, the company admitted that Dittmar was the apparent owner of two shares of its capital stock, but the attachment still remains undetermined, there being no final judgment or execution therein.

[1] On February 9, 1917, more than four months after the attachment was issued, Dittmar filed a voluntary petition in bankruptcy, and as part of his schedules presented a claim for the debtor's exemption of $300 allowed by the Pennsylvania law. Among the articles he desired, he specified the two shares of stock that had then been attached, and the trustee afterward allowed his claim. It is true that both the bankrupt and the trustee refer to the Pennsylvania Act of 1849 (P. L. 533) as the basis of the claim and of the allowance, while it is really the act of 1859 (P. L. 425), that permits shares of stock to

Digitized by Google

be claimed as part of a debtor's exemption. But this oversight or mistake, which is relied on as a reason for reversal, is hardly important enough to require discussion. In Pennsylvania it is common to speak loosely of the exemption as "under the act of 1849," although the speaker means the act of 1849 and also its supplements and amendments. But in any event it was not essential to refer precisely to a particular statute. The claim would have been sufficient, if made generally under the exemption laws of the state; nothing in the act or in the general orders imposes a penalty for failure to point out in exact terms the statute relied on.

[2] Schultz filed other objections to the trustee's action in setting these shares aside, but the exemption was approved both by the referee and the District Court. In spite of the argument that was addressed to us in support of the petition to revise, we think the approval was right. Of necessity the bankruptcy court is called upon to supervise the process of setting aside the exemption under the local law; but, after this duty has been performed, the property set aside continues to belong to the bankrupt, just as it belonged before the bankruptcy. If it were then affected by liens, it continues to be so affected; the bankruptcy court has no authority to decide upon their validity, but simply retires from the temporary control of the property and leaves other questions to be determined by the proper tribunal. Lockwood v. Bank, 190 U. S. 294, 23 Sup. Ct. 751, 47 L. Ed. 1061; Black, Bankruptcy, § 252; Collier, Bankruptcy, pp. 205–207. In the case before us the District Court did not attempt to meddle with the attachment proceeding; this is a matter for the common pleas, and of course nothing that we have said is intended to have any bearing upon the questions that may be in dispute before that tribunal.

The order is affirmed.

(249 Fed. 607)

BURKE BRICK CO. et al. v. FIRST NAT. BANK OF CAPE GIRARDEAU, MO. BURKE BROS. v. SAME. BURKE et al. v. SAME.*

(Circuit Court of Appeals, Eighth Circuit. February 28, 1918.)

Nos. 4945–4947.

CORPORATIONS ⚷487(2)—ULTRA VIRES NOTE—RIGHT TO URGE DEFENSE.

In an action by a bank on a note of a corporation indorsed by another, where it was contended that the note was ultra vires, the corporation, having received from the original and primary debtors, who used the note, full satisfaction of the amount, is not entitled to urge the defense of ultra vires.

Appeal from the District Court of the United States for the Western District of Arkansas; F. A. Youmans, Judge.

Actions by the First National Bank of Cape Girardeau, Mo., against the Burke Brick Company and M. C. Burke, against Burke Bros., a firm consisting of M. C. Burke and J. A. Burke, and against J. A. Burke and M. C. Burke, which were consolidated and transferred to the equity docket. From decrees for plaintiff, defendants appeal. Affirmed.

⚷For other cases see same topic & KEY-NUMBER in all Key-Numbered Digests & Indexes

*Rehearing denied July 8, 1918.

Digitized by Google

Joseph M. Hill, Henry L. Fitzhugh, John Brizzolara, and John H. Vaughn, all of Ft. Smith, Ark., for appellants.

James F. Read and James B. McDonough, both of Ft. Smith, Ark., and Benjamin F. Davis and Benson C. Hardesty, both of Cape Girardeau, Mo., for appellee.

Before HOOK and SMITH, Circuit Judges, and TRIEBER, District Judge.

HOOK, Circuit Judge. The First National Bank of Cape Girardeau, Mo., commenced three actions at law against the makers and the indorser of three notes—one upon a note of the Burke Brick Company, a corporation, for $6,000; another upon a note of Burke Bros., a firm composed of M. C. and James A. Burke, for $5,000; and the third upon a note of James A. Burke, for $5,000. Each note bore the indorsement of M. C. Burke. At the instance of one of the defendants, and because of the assertion of equitable defenses, the cases were transferred to the equity docket, and by stipulation were consolidated for trial. Upon final hearing the trial court decided for the plaintiff. The defendants appealed.

The defenses were that the notes were without consideration to the Brick Company, Burke Bros., and James A. Burke; that the first two were executed in the names of the company and the firm by M. C. Burke, without their knowledge or authority, and for a purpose in which they had no interest; that all of the notes were given upon an agreement with the plaintiff that the latter was to hold them temporarily to deceive a national bank examiner, who had criticized the amount of certain loans, and were then to be returned; that the note of the company was not authorized by its charter, and was therefore void.

No useful purpose will be served by reciting the evidence or by an extended discussion of it. We are of the opinion that the questions involved were purely of fact, and were correctly decided by the trial court. The efforts of defendants to bring themselves within the range of the principles of law announced in Atlantic Cotton Mills v. Indian Orchard Mills, 147 Mass. 268, 17 N. E. 496, 9 Am. St. Rep. 698, failed. The groundwork for the consideration or application of that case and others like it was not established. The only defense at all debatable was that the note of the Brick Company was ultra vires, and it is sufficient to say of it that the evidence showed that the company received from the original and primary debtors who used the note full satisfaction of the amount. It was compensated and stood to lose nothing. The situation was as if it had purchased the property turned over to it, and paid therefor with its note transferred to the plaintiff. It is in no position to urge a want of corporate power.

The decrees are affirmed.

Digitized by Google

(249 Fed. 625)

DE LACEY et al. v. UNITED STATES.

(Circuit Court of Appeals, Ninth Circuit. May 6, 1918. Rehearing Denied July 1, 1918.)

No. 3071.

1. CONSPIRACY ⟹43(6)—RESCUE—INDICTMENT—SUFFICIENCY.
   Under Criminal Code (Act March 4, 1909, c. 321) § 141, 35 Stat. 1114 (Comp. St. 1916, § 10311), declaring that whoever shall rescue or attempt to rescue any person arrested upon a warrant or other process issued under any law of the United States, or shall directly or indirectly aid, abet, or assist any person so arrested to escape, shall be punished, an indictment charging that defendants conspired to aid and abet certain persons held in custody as enemy aliens by virtue of an order for their arrest and confinement issued by the President under Rev. St. §§ 4067–4070 (Comp. St. 1916, §§ 7615–7618), and the public proclamation of a state of war between Germany and the United States, is sufficient, though not alleging that the persons in custody were alien enemies.
2. CONSTITUTIONAL LAW ⟹252—WAR ⟹4—ALIEN ENEMIES—RIGHTS OF.
   Alien enemies have no rights and no privileges, unless by special favor, during time of war; so Alien Enemy Act July 6, 1798, c. 66, 1 Stat. 577 (Rev. St. §§ 4067, 4068, 4069, and 4070), authorizing the restraint and the removal of alien enemies, is not invalid, as depriving such persons of liberty without due process of law; the constitutional safeguards not extending to enemy aliens.
3. CONSPIRACY ⟹43(5)—INDICTMENT—SUFFICIENCY—OVERT ACTS.
   An indictment for conspiring to aid enemy aliens to escape from custody, into which they had been taken under the President's order for their arrest and confinement, which alleged several overt acts, is not defective because it did not set forth, verbatim or in substance, letters alleged as overt acts.
4. CONSPIRACY ⟹43(5)—INDICTMENT—OVERT ACTS.
   In an indictment for conspiracy, it is not necessary to show how the act charged to be an overt act would effect the objects of the conspiracy.
5. CONSPIRACY ⟹43(5, 12)—PROOF—OVERT ACTS.
   An indictment for conspiracy is sufficient, if some of the overt acts are properly pleaded; and, where several overt acts are charged, it is not necessary to prove all.

In Error to the District Court of the United States for the Southern Division of the Northern District of California; Wm. C. Van Fleet, Judge.

Lawrence De Lacey and others were convicted under Criminal Code, § 141, of conspiracy to aid and abet enemy aliens to escape from custody, and they bring error. Affirmed.

Nathan C. Coghlan, of San Francisco, Cal., for plaintiffs in error.

John W. Preston, U. S. Atty., and Annette Abbott Adams, Asst. U. S. Atty., both of San Francisco, Cal.

Before GILBERT, ROSS, and HUNT, Circuit Judges.

GILBERT, Circuit Judge. The plaintiffs in error were convicted and sentenced under an indictment which charged them with a conspiracy to aid and abet E. H. Von Schack and Franz Bopp to escape from the custody of Col. George R. McGunnegle, an officer of the

⟹For other cases see same topic & KEY-NUMBER in all Key-Numbered Digests & Indexes

Digitized by Google

United States Army, who was in command of the military reserve of Ft. McDowell, Cal., and who was holding said Von Schack and Bopp in his custody by virtue of an order for their arrest and confinement issued by the President on April 6, 1917, under the provisions of sections 4067, 4068, 4069, and 4070, Rev. Stats., and the public proclamation of a state of war between Germany and the United States, promulgated by the President on April 6, 1917; the said Von Schack and Bopp having been arrested on April 7, 1917; as alien enemies by the United States marshal at San Francisco, acting under the authority of the said order of the President, and having been turned over to the custody of said Col. McGunnegle and held by him.

[1] A demurrer was interposed to the indictment, one of the grounds of which was that it was not alleged therein that said Von Schack and Bopp were alien enemies of the United States, and it is now contended that for the omission of that allegation the indictment is fatally defective. The contention cannot be sustained. In charging a conspiracy to accomplish an unlawful rescue, it is not necessary that the charge go further than the language of the statute which defines the offense. Section 141 of the Criminal Code provides for the punishment of any one who shall rescue or attempt to rescue from the custody of any officer any person arrested upon a warrant or other process issued under the provisions of any law of the United States, or who shall aid, abet, or assist any person so arrested to escape from the custody of such officer. The indictment charges, in the language of this section, that Von Schack and Bopp were arrested and confined by virtue of an order issued by the President under the provisions of Rev. Stats. § 4067 et seq., and that they were arrested as alien enemies. Commonwealth v. Malloy, 119 Mass. 347; Commonwealth v. Lee, 107 Mass. 207; Houpt v. State, 100 Ark. 409, 140 S. W. 294, Ann. Cas. 1913C, 690; People v. Murray, 57 Mich. 396, 24 N. W. 118; State v. Sutton, 170 Ind. 473, 84 N. E. 824; Smith v. State, 76 Ala. 69.

[2] We find no merit in the contention that the law under which Von Schack and Bopp were held is unconstitutional, in that it deprives them of liberty without due process of law. The sections under which these alien enemies were held were originally enacted as the Alien Enemy Act of July 6, 1798, and from that date to this, although occasion has seldom arisen to enforce the statute, no question has been made of its constitutionality. While, as to property rights and life and liberty, all aliens domiciled in the United States, or temporarily therein, are accorded the equal protection of the law, and due process of law, such is not the case as to alien enemies. "Alien enemies have no rights and no privileges, unless by special favor, during time of war." 2 C. J. 1047. Such was the common law. "Alien enemies have no rights, no privileges, unless by the king's special favor, during time of war." 1 Blackstone, 372. There is nothing in the Constitution or laws of the United States which in any way has changed the common-law rule, or restricted the power of Congress to enact the alien enemy law. Power to enact such a law may at times be essential to the preservation of the government, and the right of all nations to exercise it is recognized in international law. In Brown

Digitized by Google

v. United States, 8 Cranch, 110, 121 (3 L. Ed. 504), Chief Justice Marshall said:

"Respecting the power of government, no doubt is entertained. That war gives to the sovereign full right to take the persons and confiscate the property of the enemy, wherever found, is conceded. The mitigations of this rigid rule, which the humane and wise policy of modern times has introduced into practice, will more or less affect the exercise of this right, but cannot impair the right itself."

Even in times of peace the admission of aliens to the United States and their presence here are not of right, but of favor. In Turner v. Williams, 194 U. S. 279, 289, 24 Sup. Ct. 719, 722 (48 L. Ed. 979) it was said:

"Repeated decisions of this court have determined that Congress has the power to exclude aliens from the United States, to prescribe the terms and conditions on which they may come in, to establish regulations for sending out of the country such aliens as have entered in violation of law, and to commit the enforcement of such conditions and regulations to executive officers; that the deportation of an alien who is found to be here in violation of law is not a deprivation of liberty without due process of law."

The first reported case arising under the Alien Enemy Act is Lockington's Case, Brightly, N. P. (Pa.) 269. Lockington, an alien enemy, had refused to comply with the executive order of February 23, 1813, requiring alien enemies who were within 40 miles of tidewater to retire to such places beyond that distance from tidewater as should be designated by the marshals. He was arrested, and on petition for habeas corpus attempted to test the legality of his imprisonment. Chief Justice Tilghman said of the act:

"It is a provision for the public safety, which may require that the alien should not be removed, but kept in the country under proper restraints. * * * It is never to be forgotten that the main object of the law is to provide for the safety of the country from enemies who are suffered to remain within it. In order to effect this safety, it might be necessary to act on sudden emergencies. * * * The President, being best acquainted with the danger to be apprehended, is best able to judge of the emergency which might render such measures necessary. Accordingly, we find that the powers vested in him are expressed in the most comprehensive terms."

On the second petition for habeas corpus Judge Yeates said:

"When the vessel of the commonwealth is in danger, partial evils must be submitted to, in order to guard against a general wreck. Aliens who have come among us before a declaration of war against their sovereign, and continue to reside among us after it, cannot expect an exemption from such evils."

And Judge Brackenridge said:

"Alien enemies, remaining in our country after a declaration of war, are to be treated according to the law of nations, and it has been so argued in this case. Shall, then, the judicial power constitute itself a judge between the executive of the general government and the nation with whom we are at war, and say whether the proceeding in the case of their subjects remaining in our country has been according to the law of nations?"

In Lockington v. Smith, 1 Pet. C. C. 466, Fed. Cas. No. 8,448, Washington, Circuit Justice, said:

Digitized by Google

"It seems perfectly clear, that the power to remove was vested in the President, because, under certain circumstances, he might deem that measure most effectual to guard the public safety. But he might also cause the alien to be restrained or confined, if in his opinion the public good should forbid his removal."

And answering the contention that judicial authority must be resorted to to enforce the regulations so established by the President under the law, he said:

"Such a construction would, in my opinion, be at variance with the spirit as well as with the letter of the law, the great object of which was to provide for the public safety by imposing such restraints upon alien enemies as the chief executive magistrate of the United States might think necessary, and of which his particular situation enabled him best to judge."

In the Case of Fries, 9 Fed. Cas. No. 5,126, Circuit Justice Iredell, charging the jury concerning the provisions of the Alien Enemy Act, said:

"In cases like this it is ridiculous to talk of the crime, because perhaps the only crime that a man can then be charged with is his being born in another country and having a strong attachment to it. He is not punished for a crime that he has committed, but deprived of the power of committing one hereafter, to which even a sense of patriotism may tempt a warm and misguided mind. * * * The opportunities during a war of making use of men of such a description are so numerous and so dangerous that no prudent nation would ever trust to the possible good behavior of many of them."

[3] Without merit, also, is the contention that the indictment is defective for its failure to set forth the contents of two letters, the sending of which by the plaintiffs in error were alleged as overt acts to accomplish the conspiracy. It is asserted that by the rules of criminal pleading, if a written document is relied upon to sustain the prosecution, it must be set forth, either verbatim or in substance, citing United States v. Watson (D. C.) 17 Fed. 145. That was a case in which the defendants were charged, under section 5511, Rev. Stats., with a conspiracy to accomplish a specified result by force, threat, intimidation, etc., or "by any other unlawful means," and, as the information alleged that the unlawful means used was a certain written instrument, it was held that the instrument should be set forth, in order that the court might know whether an offense was charged. But here the offense charged is an unlawful conspiracy, and the sending of the letters are but two of the overt acts pleaded.

[4, 5] Another overt act is the procurement of money to carry out the conspiracy, and still another is the giving of a certain sum of money to effect the conspiracy. In an indictment for conspiracy it is not necessary to show how the act charged to be an overt act would tend to effect the objects of the conspiracy. United States v. Benson, 70 Fed. 591, 17 C. C. A. 293; Houston v. United States, 217 Fed. 852, 133 C. C. A. 562. An indictment for conspiracy is sufficient, if some of the overt acts are sufficiently pleaded; and, where several overt acts are charged, it is not necessary to prove them all. 12 C. J. 627.

The judgment is affirmed.

Digitized by Google

(249 Fed. 629)

HART-PARR CO. v. BARTH MFG. CO.

(Circuit Court of Appeals, Eighth Circuit. March 9, 1918.)

No. 4899.

1. EVIDENCE ⟹318(1)—HEARSAY—DOCUMENTARY EVIDENCE.
In an action for the reasonable value of labor and materials, which plaintiff bestowed, at the request of defendant, upon certain metal patterns and accessories, a written statement of the number of hours of labor expended and the materials furnished is self-serving, and should not be admitted in connection with the testimony of a witness as to the number of hours expended on the job, as shown from the time slips which were produced in court.

2. WORK AND LABOR ⟹30(2)—ACTIONS—EVIDENCE—JURY QUESTIONS.
In an action for the reasonable value of labor and materials bestowed upon certain metal patterns at the request of defendant, evidence as to the hours of labor necessary and the value of materials furnished *held* to raise a question for the jury.

3. SALES ⟹418(8)—BREACH BY SELLER—DAMAGES—REMOTENESS.
Where the delivery of metal patterns ordered for use in casting farm tractor engines, was unreasonably delayed, the maker, in the absence of a prior notice, is not liable for remote and inconsequential damages resulting to the buyer by reason of the use of wooden patterns during the delay.

In Error to the District Court of the United States for the Northern District of Iowa; Henry T. Reed, Judge.

Action by the Barth Manufacturing Company against the Hart-Parr Company, which counterclaimed. There was a judgment for plaintiff, and defendant brings error. Reversed and remanded for new trial.

Edwards, Longley, Ransier & Smith, of Waterloo, Iowa, and J. P. Gregg, of Charles City, Iowa, for plaintiff in error.

Jackson B. Kemper and Albert K. Stebbins, both of Milwaukee, Wis., for defendant in error.

Before SANBORN and SMITH, Circuit Judges, and TRIEBER, District Judge.

SANBORN, Circuit Judge. The Barth Manufacturing Company, a corporation, doing business at Milwaukee, Wis., sued the Hart-Parr Company, a corporation, engaged in business in Charles City, Iowa, for $3,581.16 which it alleged was the reasonable value of labor and materials which it bestowed, at the request of the Hart-Parr Company, upon certain metal patterns and their accessories, made by it to be used by the Hart-Parr Company in the manufacture of castings for the engines of tractors. In this litigation these patterns are known as No. 4096, crank case; No. 4099, right cylinder; and No. 4100, left cylinder. The Barth Company attached to its complaint a statement, which it called Exhibit C, of the number of hours of labor, the prices thereof per hour, the number of pounds of iron, the prices thereof per pound, the amount of other materials, and the prices thereof, which it alleged it had expended upon each of these patterns and their accessories, alleged that it had completed and delivered the crank case and the right

Digitized by Google

cylinder, and had been prevented from completing the left cylinder by a notice from the Hart Company that it would not accept it. It averred in its complaint that the prices and cost of the work and material furnished in the manufacture of the patterns for the Hart Company, as set out in Exhibit C, were fair and reasonable prices, and were the prices and costs therefor which were agreed to by the Hart Company. This last averment, if standing alone, might raise some doubt whether the action was for a quantum meruit or for a contract price; but counsel for the Barth Company insist in their brief that it is upon a quantum meruit, and the record of the trial sustains that position.

The Hart Company by its answer admitted that it had ordered the patterns, for the value of which the action was brought, and that the Barth Company had agreed to manufacture them. But it denied that the Barth Company furnished the work or material set forth in Exhibit C, that the cost or prices of the work there stated were fair, reasonable, or just, and that they were agreed to by it. It averred that the crank case and accessories were furnished under a written contract evidenced by letters of July 20 and 25, 1912, by which the Barth Company agreed to make the master pattern complete for the crank case job, including material, for $290, by which the Barth Company estimated the cost of the crank case and other accessories to be $365, and guaranteed that it should not require more than 912½ hours of labor, nor cost more than $456.25 plus the cost of material as billed to it. The amount charged for the master pattern by the Barth Company, in its Exhibit C to its complaint, was $319, and the price charged therein for the crank case and other accessories was $1,798.45. The Hart Company alleged in its answer that the Barth Company agreed that the labor cost for the right cylinder and its accessories should not exceed $456.25. The labor cost charged for this cylinder and its accessories in the Barth Company's Exhibit C was $878.24. The Hart Company averred in its answer that the Barth Company agreed that the labor cost of the left cylinder should not exceed $187.50. The labor cost charged for this cylinder by the Barth Company in its Exhibit C was $348.59. The Hart Company pleaded in its answer that the Barth Company failed to deliver either of the cylinders or their accessories within the time it agreed to furnish them, and that for that reason it had declined to accept them. It also set forth a counterclaim for $112.05 expended by it to make the crank case and core box conform to the order for them, for $93.70 it overpaid by mistake for the master pattern for the crank case, for $222.90 expenses incurred sending its shop superintendent and pattern foreman to Milwaukee, because the Barth Company had failed to construct the cylinders according to the plans and specifications in due time, and for $17,162 loss and damage which it alleged were inflicted upon it in the conduct of its business by the unreasonable delay of the Barth Company in the delivery of the metal patterns, in that the Hart Company was compelled to use wooden patterns, instead of the expected metal patterns, during this delay.

The issues presented by these pleadings were tried out before the court and a jury, and at the close of the evidence the court instructed

Digitized by Google

the jury to return a verdict for the Barth Company for $4,142.02. The Hart Company excepted to this instruction, and to many other rulings in the progress of the trial; but the main question in this court is: Was the evidence in support of the plaintiff's case so conclusive and free from substantial evidence to the contrary at the close of the trial that there was no question of fact which it was the duty of the court to submit to the jury?

In making up the amount of the verdict the court allowed the Barth Company, on account of the labor expended by it on the crank case and its accessories, other than the master pattern, $1,325.20 for 2,650.4 hours of labor at 50 cents an hour, and $296.06 for the value of iron, sheet metal, packing boxes, and lumber, making in all $1,621.26. In support of this conclusion there was evidence tending to show that in July, 1912, the Barth Company in writing estimated the labor on this crank case and accessories, excluding the master pattern, at 730 hours, costing $365, and guaranteed that it would not be more than 912½ hours, costing $456; that subsequent changes were made in the work as it proceeded, and in December, 1912, the manager of the Barth Company, in answer to an inquiry by the shop manager and pattern foreman of the Hart Company, told the latter that it looked as though the crank case job plus the master pattern, which it will be remembered the Barth Company had agreed to make, before the slight change was made in the plan of it, for $290, was very likely to cost between $1,600 and $1,800.

[1] The plaintiff introduced in evidence a statement, Exhibit YY, of the alleged number of hours of work it claimed to have expended upon the crank case job, and the testimony of Mr. Wangerin to the effect that he had found, from the time slips which were produced in court, that the number of hours thus used by the Barth Company amounted to 2,650.4 hours. There was also upon this Exhibit YY a statement of the number of pounds of iron and steel and the amount of the lumber alleged to have been used upon this job, and of its alleged value, $296.06. Counsel for the defendant objected to the introduction of this exhibit as incompetent and as a self-serving statement; the objection was overruled, and an exception noted. It goes without saying that this exhibit had no probative value. It proved no more than the denied averments of the complaint. It merely stated the number of hours the Barth Company claimed to have used; but Wangerin's testimony was the only evidence of the number actually used. It stated the amount and value of the material the Barth Company claimed to have used in this crank case job; but it proved neither that this material was used nor that its cost or value was as there set forth. In this exhibit, and in Exhibit C attached to the complaint, 3,636 pounds of iron are charged against the Hart Company at 6 cents per pound, 80½ pounds at 5½ cents per pound, 199 pounds of sheet metal, at 3½ cents per pound, packing boxes, at $10.91, and crating lumber, at $16.23. The use and the alleged price and value of these materials were denied by the answer. No evidence has been discovered in the record of the amount of those materials, if any, that were used, and no evidence has been found in the record that they were of the

Digitized by Google

value charged in this exhibit and allowed by the court. On the other hand, witnesses for the Hart Company testified that the iron used in the crank case job was not worth more than from 2.5 to 3.5 cents per pound.

[2] The number of hours which Mr. Wangerin testified were used on the crank case job was 2650.4. Witnesses who qualified as experts testified on behalf of the Hart Company that the crank case job could have been done and completed with the use of much less time, Hart of not more than 500 hours, Rishel of not more than 896 hours, Brady of not more than 950 hours, while the Barth Company in July, 1912, agreed that the cost of the master pattern would not exceed $290, nor the labor cost of the crank case and the other accessories more than $456.25 for 912½ hours. The fact is not overlooked that there was evidence at the trial that substantial changes were made in the work of manufacturing the master pattern and in the work of manufacturing the metal patterns for the crank case after the guaranty of July, 1912. But the evidence upon this subject was contradictory as to the nature and character of those changes; the witnesses for the plaintiff testifying that they were large and expensive, and the witnesses for the defendant that they were slight and of little consequence.

In this state of the evidence the conclusion is unavoidable that the answers to the questions, what was the reasonable number of hours for which the Barth Company was lawfully entitled to recover on account of the crank case job and its accessories, other than the master pattern? what was the amount and character of the material necessarily used by the Barth Company in that job? and what was the reasonable value of that material? were conditioned by substantial evidence so clearly in conflict that the Hart Company was entitled to the finding of a jury upon them.

[3] There was a similar condition of the testimony regarding the amounts which the Barth Company was entitled to recover on account of the work and material it furnished upon the right cylinder, especially upon the amount, character, and value of the materials furnished upon the right cylinder and upon the left cylinder, which forbid judgment for the amounts allowed by the court without a verdict of the jury. These conclusions compel a reversal of the judgments below and a new trial, and render it unnecessary to discuss other alleged errors. The court is, however, unanimous in the opinion that there was no error in the exclusion of the evidence offered to prove that part of the counterclaim of the Hart Company consisting of the $17,162 for alleged loss and damage to that company. That alleged injury was too remote and inconsequential, in the absence of prior notice to the Barth Company of its imminence, to form the basis of a valid claim or a just recovery.

Let the judgments below be reversed, and let the case be remanded to the court below for a new trial.

Digitized by Google

(249 Fed. 633)

In re VELER.

In re HUFFMAN TRACTION ENGINE CO.

(Circuit Court of Appeals, Sixth Circuit. March 5, 1918.)

No. 2996.

1. BANKRUPTCY ⟹76(1)—PETITIONING "CREDITOR."

In view of Bankruptcy Act July 1, 1898, c. 541, § 1, par. 9, 30 Stat. 544 (Comp. St. 1916, § 9585), declaring that the word "creditor" shall include any one who owns a demand or claim provable in bankruptcy, and may include his authorized agent, attorney, or proxy, one holding a note of an alleged bankrupt, either as agent or trustee for the true owner, is, particularly where the debt was admitted by the bankrupt, and there was no question of set-off against the true owner, competent to join as a petitioning creditor, and the jurisdiction of the bankruptcy court, based on a petition in which he joined, is not open to attack on the ground that such petitioner was not the real party in interest.

[Ed. Note.—For other definitions, see Words and Phrases, First and Second Series, Creditor.]

2. COURTS ⟹340—BANKRUPTCY—PRACTICE—CONFORMITY ACT.

The Conformity Act (U. S. Comp. St. 1916, § 1537) does not make the state rules of procedure applicable to the bankruptcy courts, the practice and procedure of those courts being prescribed by the Bankruptcy Act and the general orders and regulations pursuant thereto; hence one who was a creditor within the definition of the Bankruptcy Act may join in an involuntary petition, though he be not the real party in interest according to the local state practice.

3. BANKRUPTCY ⟹100(1)—ADJUDICATION—ATTACK.

Where an involuntary petition averred that the alleged bankrupt had admitted in writing its inability to pay its debts and its willingness to be adjudged a bankrupt, and the alleged bankrupt consented to the adjudication, filing an answer admitting the allegations of the petition, the adjudication is not open to attack on the ground that the written admission of inability to pay debts had not been made at the time the petition was filed.

4. RECEIVERS ⟹58—SETTING ASIDE APPOINTMENT.

Though under the circumstances the appointment of a receiver to carry on the business of a bankrupt corporation formed to manufacture tractors appeared to have been justified, as necessary for the preservation of the property and for the best interests of the estate, the trial court is entitled to know all the facts in the case, and where the appointment was induced by misrepresentations, the receivership may be set aside.

5. BANKRUPTCY ⟹474—RECEIVERS—APPOINTMENT—COSTS.

While those creditors procuring the appointment of a receiver must pay his compensation and expenses, where the receiver never acquired possession of the estate, or there was no fund in court excepting that which was the property of those who had successfully resisted the appointment, yet in view of Bankruptcy Act, § 3e (Comp. St. 1916, § 9587), requiring a bond on the appointment of a receiver prior to adjudication, the petitioning creditors cannot, where the receiver took possession of the entire estate of the bankrupt, without objection by the bankrupt or any creditor or lien holder, be held liable for the costs and expenses of the receivership, although, if it was wrongfully procured, the trustee has the right to recover from them for injuries to the estate resulting from such receivership.

Digitized by Google

6. BANKRUPTCY ⟹145(1)—TRUSTEES—RIGHTS OF ACTION.
The right to recover for the injuries to the estate of a bankrupt resulting from the wrongful appointment of a receiver vests in the trustee when he is appointed.

7. BANKRUPTCY ⟹474—EXPENSES OF RECEIVERSHIP.
In view of Bankruptcy Act, § 64 (Comp. St. 1916, § 9648), giving priority to those expenses which are necessary for the preservation of the estate, when a receivership ends and the assets are turned over to the trustee, the expenses of the receivership, which include the lawful debts of the receiver, are a charge on the assets, for no receiver can be appointed, excepting as a step in what is necessary for the preservation of the property.

8. BANKRUPTCY ⟹345—SECURED CLAIMS—PRIORITY—RECEIVER'S CERTIFICATES.
Where a secured creditor accepted a receiver's certificate as a partial payment on its debt, it cannot, having accepted the certificate, assert that its lien was prior to that of the receiver's certificate.

9. BANKRUPTCY ⟹347—RECEIVER'S CERTIFICATES—LIENS.
Where it was to the interest of secured creditors, who held liens on the property of the bankrupt, that its manufacturing plant should be put into successful operation, and they acquiesced in the appointment of a receiver to carry on the business, and in the sale of the property by the trustee free from their liens, the receiver's certificates, lawfully issued, are entitled to priority in payment out of the proceeds of the property over the liens of the secured creditors.

10. BANKRUPTCY ⟹474—RECEIVER'S DEBTS.
Where a receiver, appointed to carry on the business of a bankrupt and authorized to issue certain receiver's certificates, incurred other debts without authority, the fund derived from the sale of the bankrupt's property is not liable for such unauthorized debts, and the only recourse of such creditors is against the receiver personally, and perhaps against his bond.

11. RECEIVERS ⟹58—VACATING APPOINTMENT—IMPOSITION ON COURT.
Where the District Judge, after adjudicating a corporation a bankrupt and appointing a receiver, became suspicious that he had been imposed upon, two courses were open to him, to direct some procedure for the framing of issues by which the parties charged with misconduct might know the charge and have an opportunity to try the fact, or to satisfy himself by a summary inquiry as to whether such proceeding should be instituted, so a summary determination that the court had been imposed upon, without framing any issues, was improper.

12. BANKRUPTCY ⟹287(3)—JURY ⟹31(4)—AUTHORITY OF COURT.
A complaint or petition by a trustee, addressed to the bankruptcy court in the exercise of its equity powers, praying an accounting for damages resulting from the appointment of a receiver, which was secured through imposition on the court, is not beyond the equitable jurisdiction of a court of bankruptcy, or objectionable as violative of the right to a jury trial.

13. EVIDENCE ⟹383(3)—CERTIFICATE OF TRIAL COURT—EFFECT.
In view of the imperfections of the human memory, a statement or certificate of the District Judge with respect to the appointment of a receiver, which it was asserted was secured through imposition on the court, does not, where made in a summary proceeding in which no issues to determine the liability of the petitioning creditors were framed, import verity, as would a record of judicial proceedings required to be certified by the court.

14. BANKRUPTCY ⟹440—APPEAL OR REVISION.
The question of the liability of petitioning creditors for the costs of a receivership had in a bankruptcy proceeding is a controversy arising in

Digitized by Google

bankruptcy between such creditors and the adverse interests; so an appeal, and not petition for revision. is the proper remedy to review an order relating thereto.

15. BANKRUPTCY ⟹444—PROCEEDINGS—PETITION TO REVISE.
Where questions as to the distribution of a fund derived from a sale of all of the bankrupt's property free from liens are involved, petitions to revise orders made therein disclose jurisdiction.

Appeal from and Petition for Revision of Proceedings of the District Court of the United States for the Western Division of the Northern District of Ohio; John M. Killitts, Judge.

In the matter of the bankruptcy of the Huffman Traction Engine Company. Edward Veler appeals from, and files sundry petitions to revise, orders of the District Court. Orders set aside and vacated, and cause remanded.

The Huffman Traction Engine Company was an Ohio corporation, located at Kenton, organized and managed by Mr. Huffman, and its purpose was to manufacture and sell farm tractors containing a certain invention by him. It raised a scanty capital by selling stock. It made a contract with the Kenton Commercial Club whereby the Traction Company was to erect on the Commercial Club's land a $15,000 building, of which price the Commercial Club would contribute $3,000, and after the company had operated the factory to a specified extent for five years, the Commercial Club was to convey the land, which had been worth $1,200. The building was erected, the $3,000 paid, and the deed delivered in escrow. The development of the tractor into commercial form was delayed, the working capital was exhausted, and debts accumulated. Upon much of the factory equipment only partial payments were made, and liens were reserved by the vendors. Huffman had raised money upon his notes in several different banks, and had loaned these sums and others to the company on open account. It had come about that Huffman's attorney, Mr. B. F. James (who, apparently, then had no pecuniary interest in the company or its success) had recommended Huffman for credit at banks where James was known and had thought proper to indorse Huffman's paper. Thus it resulted that, on November 20, 1912, the company owed Huffman $3,397; and on that day it executed to him its six promissory notes for $500 each, and one for $397, each due in three months. He indorsed these over to James, in part to be used by James to take up outstanding Huffman paper and (perhaps) in part for what he owed James. It is claimed that it was then expected to carry the business along successfully, but that the insistence of certain lien creditors upon immediate payment upset the plan.

However that may be, a petition in bankruptcy was filed in the court below on November 27th; the three petitioning creditors being the Bowling Green Bank, the Tontogany Bank, and Edward Veler. Each alleged that it was a creditor holding one of these November 20th notes. The petition alleged a transfer with intent to prefer and with intent to defraud, and also alleged that the company had admitted in writing its inability, etc. The fact was that James had indorsed and transferred one of these notes to the Tontogany Bank in exchange for its formerly held Huffman note, had discounted one, for credit to himself or Huffman, at the Bowling Green Bank. and had turned over the third one, without consideration, to Veler, his office clerk, to be handled for James and as he might direct. James doubtless did this, instead of using his own name, because he was an attorney, and expected to be the attorney in the case, and preferred not to be a party on the record. The petition was verified by James, as attorney for the Bowling Green Bank, by Mr. E. D. Bloom, as attorney for the Tontogany Bank, and by Veler himself. On the same day, an oral application was made to the District Judge for the appointment of a receiver. James and Bloom and Huffman joined in appearing before the judge, and in stating the pecuniary

⟹For other cases see same topic & KEY-NUMBER in all Key-Numbered Digests & Indexes

Digitized by Google

condition of the alleged bankrupt and its reasonable expectations of being greatly benefited, if it could raise money enough to continue its business to the point of completing ready for sale the four tractors that were then in process of construction. Thereupon an order was made reciting that the three petitioning creditors had asked for the appointment of a receiver, that it appeared such appointment was "absolutely necessary for the protection of the estate," and that it would be "for the best interests of all creditors, and other persons interested," and directing that Mr. Bloom be appointed receiver, "clothed with all the power and authority of receivers in bankruptcy in like cases"; that he file a $1,000 bond as receiver; "that he continue to conduct the business of said alleged bankrupt until the further order of this court." At the same time, a bond was filed in the sum of $1,000, signed by the banks, per their attorneys, and by Veler, as principals, and by a surety company, conditioned to indemnify the alleged bankrupt for such damages as it should sustain in the event that the seizure by the receiver should prove to have been wrongfully obtained. On the same day, Bloom filed his bond as receiver, with a penalty of $1,000, with a surety company as surety, with the usual conditions, summarized as the faithful performance of all his official duties as such receiver.

On December 2d, the receiver filed his petition, setting up the reasons therefor, and asking an order for $5,000 receiver's certificates. Thereupon an order was made, authorizing ten certificates, of $500 each, which should be "a charge upon the income of the receivership and upon the body of the property prior to all other liens existing upon said property, except taxes upon the property and the costs of this proceeding"; but the order directed that only two of such certificates should be negotiated without further order. Further orders were later made, so that, eventually, four such certificates were issued, aggregating $2,000; and of these one was delivered to a machinery lienholder as a payment upon the lien and to postpone seizure, and three were sold to banks for cash. The business of finishing the tractors, etc., continued in various ways some two months. In June there was an order of adjudication, followed by election of a trustee.

The receivership was disastrous. The three or four machines, which were partly or wholly finished, realized but very little. The receiver obtained practically no money from any source, save from the sale of the certificates, and about $500, payment on one tractor, and, after paying operating disbursements and about $200 fees for himself and his attorney, Mr. James, had on hand for the trustee $8.84. In addition, several hundred dollars of debts, incurred by the receiver for materials and labor, remained unpaid. After a further interval the trustee sold, free from liens, all the property, including the real estate and all the remaining machinery covered by the mortgages or liens. The total of these prior liens upon the property, including the $4,200 claim of the Commercial Club, was $7,600. The total realized from the sale was $4,790, of which only $430 came from unincumbered property. The lienholders and the certificate holders and the receiver's other creditors all claimed priority upon most of this fund. The referee made certain awards and ordered distribution. Upon review, this order was confirmed by the District Court. Before it was executed, and upon the special application of an interested party, the District Court sent it back to the referee, as master, and his later report duly came up on petitions to review or exceptions. Thereupon the District Judge, on his own motion, instituted an open court inquiry, summoned witnesses, and made what seemed to him the necessary thorough inquiry into all the history of the transaction. He reached and announced the conclusions that there had been no jurisdiction, because there were not three real petitioning creditors, Veler having no actual interest, and that the District Judge had been grossly misled into the appointment of a receiver, the issue of the certificates, and such approval as he had given to the transaction. He also found that the original petitioning creditors were liable for the receiver's certificates and the receiver's debts and all later costs. An order was then made directing that the petitioning creditors pay to the trustee these sums of money, or else upon a day fixed show cause why they had not done so. Later, upon the hearing of such order, it was made final,

Digitized by Google

and various matters of distribution were determined, and another order, still later, made complete final distribution. An appeal and three different petitions to revise bring all the chief aspects of the matter to this court.

Clyde R. Painter, of Bowling Green, Ohio, Marshall & Fraser and Denman & Wilson, all of Toledo, Ohio, and Edward Beverstock, of Bowling Green, Ohio, for appellants.

Taber & Daniells and Doyle, Lewis, Lewis & Emery, all of Toledo, Ohio, and C. M. Cessna and C. W. Faulkner, both of Kenton, Ohio, for respondents.

Before KNAPPEN and DENISON, Circuit Judges, and McCALL, District Judge.

DENISON, Circuit Judge (after stating the facts as above). [1, 2] 1. The fact that Veler, one of the petitioning creditors, held the legal title to his note merely as agent or trustee for James, is not important, in any aspect now involved. The note represented a valid debt from the company to Huffman; Huffman had indorsed and transferred it to James; whether James held it under any trust for Huffman, or with only a personal interest, is not material, because he had the full legal title; James delivered the note, indorsed in blank, to Veler, directing him to take proceedings thereon in his own name, and the legal title thereby passed. Whether Veler held this as agent and trustee for James, or for Huffman, was a matter of no concern to any one except James and Huffman. So far as appears, the company had no offset or other claim against Huffman or James which would make it important that the claim should be presented in the name of either, and the company has never made any objection to Veler's action; nor has James nor Huffman. Under these conditions, we think it clear that Veler must be considered a competent and qualified petitioning creditor, and that no fraud or misleading of the court, affecting its original jurisdiction in the bankruptcy matter, can be predicated upon the fact that Veler was acting for some one else.

Indeed, it seems that Veler's action in this respect would not have been criticised, save for the Ohio statute (Gen. Code, § 11241), which provides that an action must be prosecuted in the name of the real party in interest, and an opinion of the Supreme Court of that state (Brown v. Ginn, 66 Ohio St. 316, 64 N. E. 123), which holds that the defendant, in an action brought upon an assigned claim by one who holds it only for collection, may defeat the action on that ground. Even if this were a subject upon which the federal courts were bound to follow the Ohio decisions, we would observe that in Coal Co. v. Bank, 74 Ohio St. 463, 78 N. E. 1128, it was held that the holder of such claim has, prima facie, the right to bring suit thereon and may maintain an action until his lack of interest is shown. It would follow that, while such right remained unchallenged by any party entitled to dispute it, the jurisdiction of the court in such action could not be affected.

With the same condition, we would further observe that the Uniform Negotiable Instruments Law, adopted in Ohio to be in effect

Digitized by Google

January 1, 1903 (95 Ohio Laws, 162), after the Ohio decision first cited, expressly provides that the holder of a negotiable instrument may sue thereon in his own name, and defines "holder" so as to include Veler (Ohio Gen. Code, §§ 8156, 8295, 8139). This is inconsistent with the rule of Brown v. Ginn, if that case extended to negotiable paper, as it seemingly does not. See 66 Ohio St. 324, 64 N. E. 123.

However, the Conformity Act (U. S. Comp. St. 1916, § 1537), does not make the state rules of procedure apply to bankruptcy courts. The practice and procedure of those courts are prescribed exclusively by the Bankruptcy Act and the general orders and regulations pursuant thereto. We think the bankruptcy court should follow the rule most generally prevailing, and to the contrary of that stated in Brown v. Ginn (see In re Kenney [D. C.] 136 Fed. 451, 455, and cases cited in R. C. L. tit. Bills and Notes, §§ 190, 198, 199); and the express language of the Bankruptcy Act gives support to this view. Those who file a petition must be creditors, and the definition of "creditor," given in paragraph 9 of section 1, includes the duly authorized agent or attorney of the one who "owns" the claim, even if "owner" necessarily means "equitable owner." This provision has no force, unless it means that the agent or attorney—at least, when holding such a claim as this—may proceed in his own name as creditor. He is answerable to his principal, and obviously his principal may raise the question whether "duly authorized"; probably the debtor may; but, until and unless some such meritorious question is raised, the right of the agent, who is the legal holder of negotiable paper, to proceed in his own name, and the power and duty of the court to recognize this right of the agent, must be clear. We draw this conclusion from the cumulative effect of all the considerations we have stated.

A case might arise where a single creditor had caused his claim to be divided into several notes, with the intention of scattering them for the purpose of creating two or more creditors, so as to give bankruptcy jurisdiction; but that is not this case. Huffman's good faith in taking the series of notes and distributing them in the course of paying his own several debts is not questioned.

[3] 2. It is said that the only transfer to prefer or defraud creditors which had been made by the company was one for the benefit of these notes, and hence it was a fraud to rest jurisdiction upon such an allegation. However that might be, the petition also alleged another sufficient act of bankruptcy, viz. that the company had admitted in writing its inability to pay its debts and its willingness to be adjudged a bankrupt. Whether such written admission had been at that time actually executed does not appear by this record;[1] but, if it had not been, its absence was merely an oversight. The company was doing anything which these creditors desired done; and we can find nothing here to defeat the jurisdiction of the court. Indeed, in due course, by its written answer, the company did consent to the adjudication.

[1] Except by the answer, which admits all the allegations of the petition.

Digitized by Google

[4] 3. It is most unfortunate that there was no written application for the appointment of a receiver, nor any record of the representations then made to the court. There are definite statements to be found in the petition for the allowance of receiver's certificates, and this, doubtless, reflects the substance of the original application. Since the judgment against the petitioning creditors rests upon the theory that their counsel misled the court into the appointment of a receiver and the carrying on of the business and issuing the certificates, it becomes important to examine the stated elements of that misleading.

(a) It is suggested that the representations substantially were to the effect that the assets of the company largely exceeded its liabilities, that the embarrassment was temporary, and that, with the aid of a short receivership, the company would be able to satisfy its creditors and demonstrate its solvency. It is quite evident that no later remedial proceedings can rest upon the supposition that the bankruptcy court accepted such a claim and appointed a receiver on such a theory, presented by the same creditors who were the petitioners for bankruptcy adjudication. To do so would be deliberately to apply bankruptcy remedies in a case where, in truth, the most essential element of bankruptcy was conceded to be absent.

(b) Either directly or because of indorsements, James was then, in substance, among the largest of the unsecured creditors—perhaps the chief one. The bankruptcy proceeding and the receivership were planned by him in part because he thought them the best remedy for his own protection. If, appearing as counsel for petitioning creditors and in effect for the company, he advised the court that a receivership was necessary, he ought to have disclosed his personal interest. Complete good faith with the court required this degree of frankness. The court might not give the same force to the advice from counsel who was a creditor as from counsel who was disinterested. At the same time, it is not easy to see the great materiality of this lack of frankness as applied to obtaining the receivership and the order continuing the business; its prejudicial effect at later stages is much more probable. James was not a preferred creditor (except by lien on the patents, which were worthless); his personal interests and those of general creditors and those of the Huffman Company were, probably, really identical. There seems scant room for supposing that he made any statements or gave any advice which would not have been made or given if he had not been a creditor; however, we do not doubt that the presence of this undisclosed personal interest is one of the circumstances to be considered upon the main issue here involved.

(c) It was not disclosed by the petition for certificates, and it is said not to have been disclosed at all, that the Commercial Club had either a claim of $4,200 or title to the real estate, and that various machinery and equipment vendors held purchase-price liens well towards (as it turned out, beyond) the full value. The claim of the Commercial Club for $4,200 had been entered on the books of the

Digitized by Google

Huffman Company and has been proved and allowed, so that it is now too late for it to be questioned; but we do not understand upon what theory any such claim existed. The contract made no provision for the repayment of the $4,200 in any event, and since the contract neither preserved any lien for the $4,200 to secure the performance of the five-year maintenance contract nor provided liquidated damages for a breach (see Board of Commerce v. Security Co. [C. C. A. 6] 225 Fed. 454, 140 C. C. A. 486), counsel might well have believed that no such claim existed, and might later have been glad to accept the Commercial Club's theory of lien. However, the right of the Commercial Club to forfeit the title, if the business did not continue as agreed, was clear, and the right of the machinery and equipment vendors to take back their property was of the same character. It is obvious that the existence of these rights and the imminent danger of their exercise constituted persuasive reasons for receivership—the best reasons there were. While this consideration bears on the question whether the applicants for the receivership intended fraudulently to mislead the court into the appointment, by keeping back facts which constituted good reasons, and putting forward falsehoods constituting less sufficient grounds, yet the court was, of course, entitled to full disclosure of the truth, so far as known; and if the amount of the liabilities was fraudulently understated, or the assets similarly overstated, in material extent, for the purpose of inducing an appointment which it was feared would be denied if the truth were told, it is clear that a wrong was done.

(d). Representations as to the nearly finished condition of the tractors and the certainty of a profitable market will, of course, support the theory of fraud only if they pertained to known facts or to opinions given so recklessly as to be equivalent to fraudulent statements of fact. This specific feature was not much considered below, and it will require further attention, and we now pass it by without other comment.

Upon review of the whole record, there must be grave doubt whether there was anything improvident in the conclusion to appoint a receiver, or whether the appointment would not have been made just the same if the full and exact facts then existing had been stated to the court. The vital trouble with the situation, as it turned out, was not that the debts were larger than supposed, or that there were so many vendor's liens, but was rather that the tractor, upon which the whole enterprise was based, proved to be a failure; and it seems entirely probable that in December, 1912, Huffman and James, and everybody concerned, believed that the tractor, when finished, would work and would sell. The situation, in December, 1912, as we now know it, was that $10,000 or $15,000 in cash, and an equal amount in debts, had been invested in the enterprise, and that, if it stopped at that stage, the plant and the machinery were of minimum value, and the materials and unfinished machines on hand were mostly junk; while, if the business could be continued long enough to demonstrate that it could be profitable, all the assets would greatly increase in salable

Digitized by Google

value. In that situation, the investment of $2,000 in continuing the business up to the point of demonstration one way or the other, and under the belief that it would succeed, would seem the prudent thing to do, and to be fairly within the definition of what was "absolutely necessary for the preservation of the property" (section 2 [3]), and "necessary in the best interests of the estate" (section 2 [5], Comp. St. 1916, § 9586). Nevertheless the court might not have taken that view, and was entitled to know the truth.

What has been said applies to three of the receiver's certificates, which were issued as the direct and normal consequence of the creation of the receivership. The fourth certificate (issued as 3) requires separate consideration. Its issue is claimed to have been secured by an express false representation that an attorney for one creditor consented. The record suggests the possibility of confusion and mistake on this subject rather than the supposed express intent to deceive, because this attorney for one creditor obviously had no power to consent generally to the issue of this certificate, and the false representation that he had consented would have been so far futile that it would hardly have been worth deliberate making; yet, in view of the proceedings which we later approve, we do not attempt to foreclose this question. If this certificate was fraudulently procured, and if thereby the burden upon the estate was increased $500 beyond what it otherwise would have been, damages to that amount must follow.

[5, 6] In cases where the receiver had never come into possession of the estate, or where there was no fund in court, excepting that which was the property of those who had always and successfully resisted the appointment of a receiver, it has been held that those who procure his appointment must pay his compensation and expenses. These cases were discussed in our opinion in Re National Carbon Co., 241 Fed. 330, 333, 154 C. C. A. 210. They apparently rest upon the rule of necessity. Since there is no estate or fund which can rightly be charged, and since the expenses must be paid by some one, those causing the receivership must respond. The present case is one where the entire estate of the bankrupt came into the hands of the receiver, remained there until it was turned over to the trustee, and is now in court for final distribution. The bankrupt practically consented to the appointment; no creditor or lienholder ever objected. The court authorized the incurring of the debts by the receiver, to become a charge upon the property, and credit was given on the faith of this authority. When, in such a situation, it develops that the order appointing a receiver should be and is vacated, or otherwise appears that the order was improvident, we find no principle upon which the creditors petitioning for receivership can be held directly liable for the debts which the receiver incurs. Those who became creditors of the receiver did not know the petitioning creditors and did not give credit to them; the receiver has acted as an officer of the court; and we cannot satisfactorily work out any theory of liability by an undisclosed principal. We think the true rule in such cases must be that, where the appointment of a receiver was procured wrongfully and

Digitized by Google

an injury results to the estate, the later appointed trustee is entitled to have, for the benefit of the estate, the damages consequent on such injury. This is the theory of the bond which the statute requires petitioning creditors to give (Bankruptcy Act, § 3e); it is the alleged bankrupt which must be indemnified for damages "in the event such seizure shall prove to have been wrongfully obtained"; and we have held that the right to recover for injuries to the estate pending the receivership vests in the trustee when he is appointed (Arnold v. Horrigan, 238 Fed. 39, 44, 151 C. C. A. 115). Obviously, this damage may or may not be the same in amount as the valid debts of the receivership.

[7] Ordinarily, when the receivership ends and the assets are turned over to the trustee, the current expenses of the receiver have been paid out of the current receipts and any lawful indebtedness may be deducted from the assets which go to the trustee. There can be no doubt that such debts are a charge on those assets at that time, and if they are not paid, the assets clearly remain subject to that charge. Not only does this charge result from the nature of the case, but it is expressly recognized by the distribution section (section 64) which gives priority to those expenses which were necessary for the preservation of the property; and the expenses of the receivership fall under this class by the very language which is used with reference to the creation of the receivership. No receiver can be appointed excepting as a step in what is absolutely necessary for the preservation of the property. It follows that, in this case, the lawful debts of the receiver must be paid out of the assets in the hands of the trustee, excepting so far as claims with priority may prevail.

[8, 9] It is not claimed that the action of the court, in 1916, in vacating the order for a receiver made in 1912, would affect the validity of the receiver's certificates issued and sold pursuant to the express order of the court while the receivership was in operation. The only question considered below or to be decided here is: From what persons or fund shall payment be exacted? Neither are we concerned with the inquiry whether a bankruptcy court may lack the usual power of courts of equity to authorize receiver's certificates or whether such certificates may lawfully be given priority over existing liens without the consent of existing lienors. The certificates represent valid debts of the receiver, and, holding as we do that such valid debts are part of the expenses of administering the estate or preserving the property, the priority attempted to be given by the form of the order and of the certificates is of practical importance only as evidence as to whether prior lienholders consented to be subordinated. We conclude that any degree of consent which is necessary to accomplish such subordination sufficiently appears. The two largest secured creditors are the Supply Company and the Commercial Club. The Supply Company accepted one of these certificates as a partial payment on its debts, and thereby had full notice of and the benefit of the provision that the certificates should be prior to all existing liens. Obviously it cannot take such certificate and then claim that its own lien is alone

Digitized by Google

not affected by this provision.[2] The Commercial Club was to be directly benefited by the operation of the plant, for successful operation alone could accomplish the underlying purpose of the Commercial Club's interest. So, also, each of the other secured creditors was to be benefited by such operation. One creditor held a reservation of title to a generator and switchboard installed in the plant. It was, of course, worth less if dismantled and taken out, and any attempt to make the plant a going concern was intended to be for the benefit of this creditor. The three other creditors, whose liens were allowed, held mortgage or other liens upon the tractors in process of construction, and the money represented by the receiver's certificates, put in the form of materials and labor, was very largely added to these tractors, so that there was direct benefit to these creditors. All the time it must be remembered that the amount of unincumbered property was negligible, and that unsecured creditors had no interest in the property covered by liens, since, both separately and collectively, the property covered by mortgage or liens was insufficient to pay the secured debts. The secured creditors were therefore the ones primarily interested in preserving the property through the operation by receiver. It seems probable that they would have known of the priority given to the certificates upon their issue; but, however that may be, we find that each of these secured creditors (except the Supply Company) acquiesced in the operation by the receiver, made no effort to enforce his lien by withdrawal of his property or otherwise, acquiesced in the sale of the entire property by the trustee free from liens, and in no form or manner attempted to make any reservation or preservation of his lien as superior to the expenses of operation or the other expenses of administration. Under these conditions, we think it clear that the receiver's debts represented by the certificates are entitled to priority in the fund derived from the property covered by liens; and though the pro rata contribution, as directed by the referee, is not wholly satisfactory, no other practicable method appears.

It appears that there is a small fund ($430) coming from the sale of unincumbered property. The considerations which give the receiver's certificates priority in the proceeds of the property covered by liens do not apply, or apply with less force, to the ordinary administration expenses after the trustee was appointed. As to these, it may well be that they were incurred only in the expectation that they would be paid out of the general fund and should be confined thereto. This we do not undertake to consider.

[10] The receiver's debts, other than evidenced by the certificates,

[2] We do not overlook the fact that the Supply Company took this certificate "without prejudice to all the rights and liens which [it] holds under its said chattel mortgage." This proviso cannot reasonably operate to permit the Supply Company to attack the declared basis of the series of certificates, one of which it was accepting; the proviso is given due effect by treating it as intended to meet any claim that acceptance of partial payment or extension of time would be a waiver of the existing chattel mortgage rights or the initiated foreclosure rights. The Supply Company's liens upon machinery and proceeds continued unimpaired, save by the practical concession that the receiver's certificates were rightly part of the expenses of administration.

Digitized by Google

and except for labor, stand upon a different footing. In Haines, Receiver, v. Buckeye Wheel Co., 224 Fed. 289, 139 C. C. A. 525, where, also, the court had authorized the business to be continued by the receiver, and where the intention of the court not to permit the receiver to incur any obligation except the certificates, was, if anything, less clear than in the present case, this court held that the receiver's other debts were unauthorized. That was not a bankruptcy receivership, but there seems to be no difference in principle. It necessarily follows, from the Haines Case and from the general rule that the fund is not liable for receiver's debts incurred without authority, that the only recourse of these other creditors is against the receiver personally, and perhaps (a question not decided in that case) against his bond. The labor debts, however, were given priority over the lienholding creditors by the first referee's report and it is not clear that any objection was ever made. If not, their right thereto must be taken as conceded, and is not to be disturbed.

[11, 12] It remains to decide whether the issues, whether there had been a wrongful procurement of the receivership and whether the petitioning creditors were liable therefor, were rightly tried. We cannot escape the conclusion that there has been a mistrial thereon, and this conclusion necessarily requires a determination of what the right method may be. The District Judge became suspicious that he had been imposed upon. It was not only his clear right, but his duty, to proceed upon his own motion into a thorough inquiry upon the subject. In such a situation, we think two courses open to the trial judge: The first is to direct some procedure for the framing of issues, by which the parties charged with misconduct or liability may know the charge and have suitable opportunity to try the fact. The second is to proceed with a summary, more or less ex parte, inquiry, in order to satisfy himself whether a proceeding of the first class should be instituted. We think the court below failed to preserve the necessary vital distinction between these two methods. An ex parte inquiry, undertaken upon the motion of the court and pursued without the formulation or service of any charges or issues, resulted in a formal finding of facts to the effect that the misconduct had occurred and had been committed by the authorized agents of the petitioning creditors. Thereupon these creditors (under the construction of the order most favorable to them) were ordered to show cause why judgment should not be rendered against them accordingly; but it is evident that the court had reached conclusions which, to say the least, would not be readily changed, and which seem to have been practically regarded as unassailable, unless by new and additional evidence. We cannot think that the parties charged had that kind and degree of hearing to which they were entitled.

It is said that the only alternative to the practice here pursued is a plenary action at law before a jury. This does not follow. The whole matter is ancillary to the bankruptcy proceedings, and the bankruptcy court has, in a broad sense, the power of a court of equity. A complaint or petition by the trustee, addressed to the bankruptcy court in the exercise of its equity powers, asking an accounting for the damages caused to the estate by the wrongful acts committed after

Digitized by Google

the filing of the petition and asking for judgment against those responsible therefor, would not, in a case like this, go beyond the jurisdiction of the court of bankruptcy, according to the familiar principles of ancillary proceedings in equity; nor would it violate anybody's right to a jury trial, and it would enable the issues to be decided by the court personally familiar with the whole situation—unless, indeed, his personal knowledge and participation in the matter involved might appear to the judge sufficiently embarrassing to justify him in asking that another judge take charge.[8]

[13] How much, if any, question there may be as to what actually occurred on the presentation to the District Judge of the oral application for a receiver, does not appear. The District Judge made a statement of such matters, and neither James nor Huffman nor Bloom put in any testimony, although an opportunity was given them to do so. However, this opportunity was in the course of what they then must have supposed to be an inquiry merely preliminary to some proceeding in which they or the petitioning creditors could be fully heard, and they were under no obligation to accept the offer to give testimony in this preliminary inquiry. It is argued that this statement or certificate by the District Judge may not be disputed. This proposition cannot be accepted in its full sense. Such a statement is entitled to the highest respect and credence; under all ordinary circumstances, it would be accepted without question; but we cannot think that it imports verity in the sense in which that is true of some judicial proceedings and records. To preserve a record of what occurs before him in chambers, and to certify the same to a reviewing court are not among the duties imperatively imposed upon a trial judge; and the imperfections of human memory are too great to permit the theory of importing verity to apply to all such proceedings under all circumstances.

[14, 15] It is evident that we regard the liability of the petitioning creditors in this case as presenting a controversy arising in bankruptcy between them and the adverse interests rather than a step in the administration of the estate, and that, therefore, an appeal is the proper remedy. See In re Martin (C. C. A. 6) 201 Fed. 31, 36, 119 C. C. A. 363. This is not to say that there might not be cases in which a petition to revise would properly present an analogous question, but only that, in this case, the issue is so far outside the ordinary administration of the estate and so far between adversary parties in interest as to constitute a real controversy. However, questions as to the distribution of the fund are necessarily involved as collateral to the other issue, and each of the petitions to revise discloses jurisdiction. All motions to dismiss are therefore denied.

It would have been possible to dispose of this matter by deciding only that the necessary procedure had not been followed; but both the record and the argument have been very full in all directions, and the results which we reach as to the certificates and the unauthorized

[8] It should be stated that the District Judge who appointed the receiver did refer the present issues to another judge, and later assumed the decision himself reluctantly and because the reference had to be abandoned.

Digitized by Google

debts affect the basis of the proceedings below, and for these reasons, and to aid in bringing an end to this complicated controversy, we have gone further in indicating our views of some collateral matters than we usually do, and we think it better to set aside wholly the orders in question, rather than to reverse only parts. This will leave the court below at liberty to repeat any action which we have not disapproved, or to modify it as the changed basis may require.

Our direction, therefore, is that the orders made by the District Court on November 2 and November 11, 1916, and January 17 and June 25, 1917, be set aside and vacated, and that the case be remanded for further proceedings in accordance with the views herein expressed. This will leave matters standing upon the second report of the master and the exceptions, objections, and motions made thereto. This disposition of the matter implies no liability to refund to any appellant any amount that it may have paid pursuant to the order appealed from; neither is it intended to disapprove the action of the court below in refusing any compensation to James or Bloom as counsel or receiver. That action was, upon this record, within the court's discretion. This is also without prejudice to such proceeding as may be thought necessary to protect the estate from loss which might result if the certificates held by the Bowling Green Bank were paid while the liability of that bank as petitioning creditor was alleged and undecided.

The costs of this court, including one docket fee for the appeal and all petitions and the cost of printing the appeal record, except pages 189 to 282, and the petition records filed January 26th, March 14th, and October 2d, will be paid by the trustee from the fund, first, out of any balance there may be of the $430 not exhausted by previous costs; and, second, at the expense of the secured creditors pro rata.

(249 Fed. 646)

GRAND RAPIDS & I. RY. CO. v. UNITED STATES.

(Circuit Court of Appeals, Sixth Circuit. March 5, 1918.)

No. 3060.

MASTER AND SERVANT ⟹13—RAILROADS—OPERATION—HOURS OF SERVICE ACT.

Hours of Service Act (Act March 4, 1907, c. 2939) § 2, 34 Stat. 1416 (Comp. St. 1916, § 8678), provides that no telegraph operator transmitting, receiving, or delivering orders affecting train movements shall be required or permitted to be on duty more than nine hours in any 24-hour period in towers, offices, and stations continuously operated night and day. A tower office used continuously by three operators burned, and thereafter an office at an adjacent station was used for some time; three operators being provided. The railroad company then placed a box car about the site of the old tower in the yards some distance from the station. The station then was operated only in the day; the agent operator being on duty more than 12 hours, while the operator in the box car was on duty more than 12 hours at night. *Held*, that the railroad company could not escape the provisions of the statute on the theory that the box car and station were separate offices, particularly as the station had been used as night and day office for more than a year previously, and the business conducted through the station and box car was unitary in its character.

⟹For other cases see same topic & KEY-NUMBER in all Key-Numbered Digests & Indexes

Digitized by Google

In Error to the District Court of the United States for the Northern Division of the Eastern District of Michigan; Arthur J. Tuttle, Judge.

Action by the United States against the Grand Rapids & Indiana Railway Company. There was a judgment for the United States, and defendant brings error. Affirmed.

James H. Campbell, of Grand Rapids, Mich., for plaintiff in error.

John E. Kinnane, U. S. Atty., of Detroit, Mich., and Philip J. Doherty and Roscoe F. Walter, Sp. Asst. U. S. Attys., both of Washington, D. C.

Before WARRINGTON, KNAPPEN, and DENISON, Circuit Judges.

WARRINGTON, Circuit Judge. The railway company seeks reversal of judgment entered against it in the District Court upon a verdict directed in favor of the United States. The action was to recover penalties for alleged violations of the first proviso to section 2 of the federal Hours of Service Act (34 Stat. 1416). The services were rendered by two of the company's telegraph operators in 1916, on March 13 to March 17, inclusive, in telegraph and telephone offices maintained by the company at Elmira station and K. S. tower, and within its yard located there. Elmira station is about three-eighths of a mile south of K. S. tower, and both are upon the main line. Upon the admitted facts the only question presented is whether, in view of the manner in which the services had been and at the times in question were performed, those places are to be regarded as two distinct offices, or as one office, within the meaning of the Hours of Service Act.

Prior to the Hours of Service Act, and until the K. S. tower was constructed and put in operation, February 25, 1906, the company used the Elmira office continuously through one agent operator from 7 a. m. to 7 p. m., and another operator from 7 p. m. to 7 a. m. From the opening of K. S. tower until May 25, 1914, when it burned down, the Elmira office was used only as a day office and by one agent operator from 7 a. m. to 7 p. m. The K. S. office was used continuously by two operators, one during the day and the other during the night, until the Hours of Service Act went into effect, March 4, 1908; it was then used continuously by three operators, each working 8 hours in the 24; this practice was continued until May 24, 1914, though, by overlapping, the hours of each operator were increased to nine. By reason of the fire the K. S. office was temporarily abolished, and during this period—that is, from May 25, 1914, to April 21, 1915—the Elmira office was again used continuously though by three operators, each working 9 hours. On April 21, 1915, day service alone was resumed at the Elmira office through an agent operator from 7 a. m. to 7:30 p. m.; and this was continued until and including the dates now in question, March 13 to 17, inclusive, 1916. When the day service was so renewed at the Elmira office, the company, through the use of a box

Digitized by Google

car, re-established a telegraph and telephone office at the site of the K. S. tower; and from that time on, and including the dates in issue herein, this box car office was used as follows: One operator served regularly from 7 p. m. to 7:30 a. m., though this was not all the service rendered there. The operator at the Elmira office, in addition to his duties there as a station agent, was compelled to keep in touch with the box car office daily, by going there himself to look after waybills, and by giving orders over the telephone from the Elmira office to conductors and engineers, as well as receiving necessary information from them, at the box car office; the conductors and engineers, as well as the agent operator at the Elmira office, having been supplied with pass-keys to enter and use the box car office. When necessary, the train employés, such as conductors, would go from the box car office to the Elmira office to communicate personally with the agent operator in regard to orders concerning the movements of cars or trains.

Without further pursuing details, it is plain that the situation comes to this: Three operators were employed to do the work at both offices prior to the Hours of Service Act, four were required thereafter until the burning of the K. S. tower, and three were found necessary at the Elmira office alone until the box car office was put into service; but these forces were then reduced to two men, who were each required to work 12½ hours in every 24-hour period. Despite these facts, there is not the slightest showing that the work to be performed had in any respect been reduced. It is to be borne in mind, moreover, that during the time the K. S. office was abolished on account of the fire—that is, from May 25, 1914, to April 21, 1915—all the work was performed at the Elmira office alone, though with three operators. It is not explained why this plan might not have been continued.

It is certainly difficult to understand how the restoration of the K. S. tower in the form of a box car could justify the reduction made in operators and the imposition of the consequent extra service upon two men. This was not to change the service in kind, nor, as already stated, to reduce it in amount, but only to require it to be performed at points relatively in close proximity, indeed, at the old places and in the same yard, though by a force materially reduced. If, then, we consider the régime existing before the fire at K. S. tower, we find a continuous "night and day" service necessary and a suitable force to perform it; and if, on the other hand, we consider the Elmira office service alone from the date of the fire to that of the resort to the box car, we again find a continuous "night and day" service required and a force sufficient to discharge it. In the face of these conditions, it is argued for the railroad that "the stations at Elmira and K. S. tower did not constitute a single station, but were distinct stations, and that it was lawful to keep the men (man) at each station who operated the telegraph, in addition to other duties, on duty not exceeding 13 hours in the 24-hour periods." We are not impressed by this contention; its claims are in disregard of the real situation. This is shown by what is offered in support of the contention. It is said, for instance, that Elmira station is an ordinary passenger and freight depot, and the

Digitized by Google

K. S. tower is a terminal of one of the freight divisions.[1] The difference between a passenger-freight depot and a division terminal is not helpful, since it does not show how train orders and the like were distributed between the two offices; and it is obviously important to observe and bear in mind what proportion of the orders was sent to the Elmira office. The train dispatcher was stationed at Grand Rapids, and all telegraphic orders concerning train movements on the road between Grand Rapids and Mackinaw City originated with him; it need not be said that both of the offices in question were between these points. It will be remembered that, from the time of the fire until the opening of the box car office, all orders affecting train movements to and from either Elmira station or the freight terminal in question were necessarily sent to the Elmira office, since no telegraph office was maintained at the site of the K. S. tower during that period, and, further, that no person was kept at the box car office at any period in question here to receive telegraph orders during the daytime. Thus counsel overlooks conditions which restricted the sending of telegraphic train orders through the Elmira office alone for nearly a year, and indeed thereafter as to all daytime orders of that character throughout the period of the present controversy. It is said, moreover, that the work of handling train orders at either of these stations was negligible; but here, again, the facts are ignored concerning the number of telegraph operators that had been employed for years, even at the Elmira office during the time between the fire and the opening of the box car office, to do the train order work arising through train movements at these two points.

Further, counsel insists that the K. S. tower was part of the facilities embraced in the freight terminal at that place; but this does not meet the situation. The K. S. tower was not in fact restored as a structure, nor as a "night and day" telegraph office was it possessed of an adequate force; the box car office cannot in any just sense be said to be a substitute. It is also urged that the work at each office was distinct from the work at the other. This may be conceded as to the time before the fire; the concession, however, cannot aid the defense, since we have seen that for nearly a year after the fire the entire train order services for these two points were carried on at the Elmira office alone, and that afterwards the daytime services required in respect of the box car office were conducted by the Elmira operator; and it is to be added that nothing more certainly than these facts could show the nature of the train order services. They were evidently unitary in character and susceptible of performance in one office. Considered in their entirety, the services related to the same train movements and demand-

[1] True, counsel states, with seeming support of the agent operator at Elmira, that this terminal includes a railroad yard extending southwardly from Boyne Hill to a point 500 feet north of Elmira; but, while there is no practical difference in a case like this between the joint use of two contiguous yards and the use of a single yard, we feel bound to accept the statement of the division superintendent, who testified in detail in respect of the yard limits, stating among other things that "the yard limit boards are placed south of Elmira and north of K. S. tower," and that "K. S. tower and the [Elmira] depot are between the yard limit boards both of them."

Digitized by Google

ed adoption of the statutory "night and day" system, with an adequate force of operators, after the introduction of the box car office as well as before. In truth, the services possessed the essential attributes of a "night and day" system (United States v. Grand Rapids & I. Ry. Co., 224 Fed. 667, 671 to 673, 140 C. C. A. 177 [C. C. A. 6]), which unerringly characterized the work performed at the two offices as in reality belonging to a single office. This feature cannot be suppressed and the "night and day" clause frustrated, simply by severance of the work and by calling the two places of performance "distinct stations"; these places are to all intents and purposes but one office—a "night and day" office. As Judge Tuttle said in the course of his charge:

"It is plain * * * that by the transfer of an operator from the depot down to the box car three-eighths of a mile away they were not creating a new tower, or two towers, or two offices, or two places or two stations," within the true intendment of the Hours of Service Act.

Furthermore, the fact that the services were for a substantial length of time all performed at the Elmira office brings the instant case well within the reason of the decision in Atchison, T. & S. F. Ry. Co. v. United States, 236 Fed. 906, 907, 908, 150 C. C. A. 168 (C. C. A. 8), which is opposed to the scheme here resorted to. That case was followed by the same court in Illinois Cent. R. Co. v. United States, 241 Fed. 667, 670, 154 C. C. A. 425, affirming decision below in the same case, 234 Fed. 433, 435; and see, in the case last cited, apposite conference ruling of the Interstate Commerce Commission.

Judgment affirmed.

(249 Fed. 650)

GRAND RAPIDS & I. RY. CO. v. UNITED STATES.

(Circuit Court of Appeals, Sixth Circuit. February 16, 1918.)

No. 3059.

1. RAILROADS ⟹229—OPERATION—SAFETY APPLIANCE ACT.

The main purpose of Safety Appliance Act March 2, 1893, c. 196, 27 Stat. 531 (Comp. St. 1916, §§ 8605–8612), requiring the equipment of freight trains with power and train brakes, was to protect brakemen, who theretofore had been required to go on the tops of moving trains to set the hand brakes.

2. MASTER AND SERVANT ⟹142—RAILROADS—OPERATION—SAFETY APPLIANCE ACT.

In view of the purpose of the Safety Appliance Act to protect brakemen by obviating the necessity of their going on the top of trains to use hand brakes, the fact that it was necessary to manipulate levers on top of trains for retainers, which were part of the power brake mechanism, does not justify an order of the railroad company requiring freight brakemen to use hand brakes on the descent of a long grade; it appearing that the railroad company directed that all trains should be brought to a full stop before commencement of the descent of the grade, at which time the levers on the retainers could be set.

3. MASTER AND SERVANT ⟹142—RAILROADS—OPERATION—SAFETY APPLIANCE ACT.

As Hand Brake Act April 14, 1910, c. 160, § 5, 36 Stat. 298 (Comp. St. 1916, § 8622), declares that nothing therein shall be held or construed to relieve any common carrier from any of the provisions of the original

---

⟹For other cases see same topic & KEY-NUMBER in all Key-Numbered Digests & Indexes

Digitized by Google

Safety Appliance Act, as amended by Act April 1, 1896, c. 87, 29 Stat. 85, and Act March 2, 1903, c. 976, 32 Stat. 943 (Comp. St. 1916, §§ 8605–8615), the requirement that freight cars should be equipped with hand brakes does not justify railroad company in directing brakemen to use the same on the descent of a long grade.

In Error to the District Court of the United States for the Northern Division of the Eastern District of Michigan; Arthur J. Tuttle, Judge.

Action by the United States of America against the Grand Rapids & Indiana Railway Company. There was a judgment for plaintiff (244 Fed. 609), and defendant brings error. Affirmed.

James H. Campbell, of Grand Rapids, Mich., for plaintiff in error.

Roscoe F. Walter, Sp. Asst. U. S. Atty., of Washington, D. C.

Before WARRINGTON, KNAPPEN, and DENISON, Circuit Judges.

WARRINGTON, Circuit Judge. This is an action to recover penalties for alleged violations of the Safety Appliance Act. The controlling issue arising upon the pleadings and the evidence is whether, as respects freight trains of ten or more cars, while descending a particular grade known as Boyne Hill and upwards of eight miles in length on its main line, the railroad company could rightfully adopt and enforce a general order in terms requiring these trains to be controlled by hand brakes, and forbidding the use of air brakes unless it was evident that the trains could not be controlled by the hand brakes, or unless necessary to use the air brakes to make stops. The case was heard below upon an agreed statement of facts and certain testimony, and a directed verdict was rendered in favor of the United States. The agreed facts and the effect of the testimony, together with the charge of the trial judge, appear in 244 Fed. 609. Judgment was entered on the verdict for the amount claimed, $100, in each of five counts embraced in the declaration; and the present complaints of error relate to the rulings upon these counts.

[1, 2] We are convinced that the judgment is right, and that it is not necessary to discuss the claims of counsel, except in one respect. Counsel for the railroad urges that the contrivances, called retainers, constitute an essential part of the air brake system, that it is necessary for the brakemen to operate the retainer valves, and to do so on top of the cars in the course of their descent upon a grade, and that this presents a question which has not been considered in any reported case. The particular feature of the contention is that, since the brakemen are at such times required to go on top of the moving train, independently of any necessity arising from the use of hand brakes, there is no sufficient reason to hold, under the statutory provision requiring all cars to be equipped with efficient hand brakes, that their use was intended to be limited to the switching of cars in the yards.

It is true that the retainers are part of the air brake system. The retainer is a pipe connected with a triple valve (which, with the brake cylinder and auxiliary reservoir, is centrally located underneath the car) and extending from such valve along the bottom and the end of the car to the top, where a retaining valve with an operating lever

Digitized by Google

is mounted upon the end of the pipe; and the retention or escape of the air through the retainer may to some extent be regulated by manipulation of this lever. However, if it be assumed that testimony is admissible to question the efficiency of a statutory air brake system admittedly, as here, in good order and condition, we think it safe to say under the present record that a suitable number of these levers could be so placed when the train is at a full stop, and just before commencing to descend Boyne Hill, as to enable the locomotive engineer, while descending the hill, to control the speed of the train through the use alone of the air brake system. It is to be noted, moreover, that the general order requires "all freight trains" to "come to a dead stop just before commencing to descend Boyne Hill" (244 Fed. at page 610), and the trains here in dispute were all stopped at this point. Hence this is not a case, for instance, of a sudden failure of an air brake system to operate and the use of hand brakes to meet the resultant emergency; it is a case of deliberate substitution of hand brakes for a prescribed air brake system, founded at most on a belief of the railroad company that hand brakes are safer than the air brake system for descending the hill, and in practical effect is scarcely less than an attempt through a general railroad order to nullify the statute. It would therefore seem clear that the railroad order relied on is not sustainable upon the theory urged that the use of the retainers while descending a grade requires brakemen to go on the tops of trains.

Further, it is universally understood that the primary object of the Safety Appliance Act includes the protection of railroad employés against the old method of braking. Johnson v. Southern Pacific Co., 196 U. S. 1, 17, 19, 25 Sup. Ct. 158, 49 L. Ed. 363. This was declared as early as 1897 by the Interstate Commerce Commission (11 Ann. Rep. I. C. C. 130, 131); and in 1900, speaking of men falling from trains and of a time "when the train brake comes into general use," the Commission expressed its understanding of the act thus:

> "The men will not then be obliged to use the tops of cars for braking, nor to walk on the running boards. The freight train will be as completely under the control of the engineer as passenger trains are at the present time." 13 Ann. Rep. I. C. C. 55; and see 14 Ann. Rep. I. C. C. 78, 79.

Judge Gilbert has shown that, when the safety appliance bill was pending in Congress, the House committee on interstate commerce stated in its report that the measure would "dispense with the use of men on the tops of the cars," and that the chairman of the committee having charge of the bill in the Senate explained that "the men who are on top of the cars to-day will be taken off and thereby relieved from the danger of such positions." United States v. Great Northern Ry. Co., 229 Fed. 927, 929, 144 C. C. A. 209 (C. C. A. 9). And Judge Knapp, who is possessed of special knowledge and experience as to this class of legislation, speaking for the Court of Appeals for the Fourth Circuit in Virginian Ry. Co. v. United States, 223 Fed. 748, 751, 139 C. C. A. 278, said:

> "It was the evident purpose of the train brake provision to prevent the danger resulting from the operation of hand brakes on the tops of cars in moving trains. Just as the object of the automatic coupler is to keep em-

Digitized by Google

ployés from going between cars, so the object of the train brake is to keep employés from going on top of cars to set and release the hand brakes. The purpose of the law is the guide to its interpretation. * * *"

[3] In view, then, of the purpose of imposing and exacting the use of the air brake system, it cannot be that an essential portion of the system itself, like the retainers, may be employed to frustrate the act.

We, of course, have in mind counsel's view, already stated, of the provision in the act of 1910, requiring all freight cars to be equipped with efficient hand brakes; but we cannot think this provision was intended to defeat the design of the original act to release brakemen from the danger of going on the tops of trains moving upon the main lines; indeed, there is a plain inconsistency in the provisions themselves, the one exacting the air brake system and the other the hand brakes, which forbids a railroad company, upon its own idea of safe operation along its main line, to displace the air brake system in favor of the hand brake. This inconsistency is both recognized and provided for by section 5 of the Hand Brake Act (36 Stat. pt. 1, p. 299), which enacts among other things that "nothing in this act shall be held or construed to relieve any common carrier * * * from any of the provisions * * * or requirements" of the original Safety Appliance Act (27 Stat. 531), as amended by the acts of April 1, 1896 (29 Stat. 85), and March 2, 1903 (32 Stat. pt. 1, p. 943). The effect of this provision is particularly applicable to the instant case by reason of the admitted facts, before alluded to, that defendant's air brake system was "at the time in good order and repair and in efficient condition and properly connected for use." 244 Fed. 610. It must result that the requirement to equip all cars with efficient hand brakes was designed for purposes distinct from the use to which they were put in descending Boyne Hill; and it is sufficient here to say that the act concerning hand brake equipment finds abundant reason for its existence and application in places where the use of the air brake system is impracticable, as, for instance, in railroad yards. As Mr. Justice Van Devanter said when pointing out the distinction between train movements on main lines and movements in railroad yards:

"These [yard movements] are not train movements, but mere switching operations, and so are not within the air brake provision." United States v. Erie R. R., 237 U. S. 402, 408, 409, 35 Sup. Ct. 621, 624 (59 L. Ed. 1019).

And as was said in United States v. Great Northern Ry. Co., supra, 229 Fed. 930, 144 C. C. A. 209 (C. C. A. 9):

"The language of the act was equivalent to declaring that after the date named freight trains should not only be equipped to run, but should actually be run without requiring brakemen to use the common hand brake. No implication to the contrary is to be found in the provision in section 2 that all cars must be equipped with 'efficient hand brakes,' a provision which is ascribable to the necessity of controlling the movement of cars in yards and elsewhere, when trains have been broken up or are being made up."

To the same effect, United States v. Chicago, Burlington & Quincy R. R., 237 U. S. 410, 412, 35 Sup. Ct. 621, 59 L. Ed. 1019; United States v. Pere Marquette R. Co., 211 Fed. 220, 222 (D. C.).

Digitized by Google

We therefore hold that neither the retainers, nor the hand brakes, nor both, justified the order or the acts of the railroad; accordingly the judgment will be affirmed.

(249 Fed. 654)

TURNER v. SCHAEFFER (three cases).

In re LOWES.

(Circuit Court of Appeals. Sixth Circuit. February 11, 1918.)

Nos. 3006-3008.

1. BANKRUPTCY ⟹306—ACTIONS—MODE OF REVIEW.
A plenary action by trustee in bankruptcy to recover money only, alleged to have been paid as a preference in favor of a surety and his principal, is an action at law, reviewable on writ of error, instead of appeal.

2. APPEAL AND ERROR ⟹1008(2)—REVIEW—FINDING—WAIVER OF JURY.
Both under the decisions and Rev. St. § 649 (Comp. St. 1916, § 1587), providing for waiver of a jury, a finding of fact by the trial court, whether general or special, has the effect of a verdict.

3. APPEAL AND ERROR ⟹859—REVIEW—WRIT OF ERROR.
On writ of error to review a judgment rendered in an action where jury was waived, the only inquiries open are, in view of Rev. St. §§ 700, 1011 (Comp. St. 1916, §§ 1668, 1672), whether the evidence tends to support the ultimate finding, and whether the finding, in turn, is sufficient to sustain the judgment.

4. APPEAL AND ERROR ⟹994(3)—REVIEW—SCOPE.
On writ of error to review an action tried to the court without a jury, credibility of witnesses cannot be weighed.

5. APPEAL AND ERROR ⟹169—REVIEW—SCOPE.
On writ of error, a judgment cannot be reversed on account of alleged newly discovered evidence, never called to the attention of the trial court, for in actions at law an appellate court can only correct errors of the lower court.

6. NEW TRIAL ⟹108(1)—NEWLY DISCOVERED EVIDENCE.
On writ of error to review judgments in plenary actions by a trustee in bankruptcy, attacking as preferential payments by bankrupt, evidence alleged to have been newly discovered since the judgments were entered, if susceptible of consideration, *held* no ground for reversal, not being of such a character as would probably produce a different result.

7. BANKRUPTCY ⟹303(1)—PREFERENTIAL TRANSFERS—ACTION.
A trustee in bankruptcy, alleging that transfers were preferential, has the burden of proof, and judgment in his favor cannot be based merely on suspicion.

In Error to and Appeal from the District Court of the United States for the Western Division of the Southern District of Ohio; John E. Sater, Judge.

Actions by Wellmore B. Turner, as trustee in bankruptcy of Joseph E. Lowes, against Harry F. Schaeffer and the City National Bank, against Harry F. Schaeffer and the Third National Bank, and against Harry F. Schaeffer and the First Savings & Banking Company. The actions having been dismissed as to the several banks, there were judgments for the individual defendant, and plaintiff brings error and appeals. Appeals dismissed, and judgments affirmed.

⟹For other cases see same topic & KEY-NUMBER in all Key-Numbered Digests & Indexes

Digitized by Google

January 6, 1912, Turner, as trustee in bankruptcy of Lowes, filed three petitions in the court below for the recovery of money only, one against Schaeffer and the City National Bank of Dayton, Ohio, for $30,550, another against Schaeffer and the Third National Bank of Dayton, for $25,190.16, and the other against Schaeffer and the First Savings & Banking Company of Dayton, for $13,156.93, with interest upon these sums from specified dates. Defendants in each case demurred to the petition, which in each instance resulted in the filing of an amended petition, the sums of money sought to be recovered and the defendants remaining the same; the allegations of the amended petitions were in other respects substantially alike. It is charged that Lowes, doing business as a general contractor under the name of Luyster & Lowes, was by the court below adjudged a bankrupt December 11, 1911; that plaintiff was appointed trustee December 27th, and is still acting in that capacity; that Lowes was indebted to these banks in the sums above mentioned, and that Schaeffer, who is the father-in-law of the bankrupt, had been in charge of the bankrupt's offices and business in Dayton, and had become surety for the bankrupt on his indebtedness to these banks; that on dates named within the four-months period the bankrupt, well knowing that he was insolvent and with intent to prefer the defendant banks and Schaeffer, as creditors, and in violation of the Bankruptcy Act, withdrew from his funds and through Schaeffer paid the sums stated to the several banks; that the banks and Schaeffer then had reason to believe that Lowes was insolvent, and that the payments were so made for the purpose of preferring defendants as his creditors; further, in substance, that these payments were made pursuant to an agreement and a conspiracy between Lowes and Schaeffer and the several banks to deprive the bankrupt's other creditors of power to collect their claims, and so to appropriate the bankrupt's assets to the payment of the obligations of Lowes and Schaeffer to the banks.

Issue was joined in each case by separate answers of the defendants, specifically denying each of the allegations tending to charge a preference. May 4, 1915, the causes were brought to a hearing together under an agreement to waive a jury and to try them to the court. The plaintiff called as witnesses only Lowes and Schaeffer and W. W. Smart, the bookkeeper of Luyster & Lowes, and submitted exhibits showing creditors other than the banks, who had not been paid in full, and the sums due to them, etc. At the close of the plaintiff's evidence motions were made to dismiss the actions as against the banks, on the ground that there was no testimony to sustain the alleged "scheme or conspiracy, or any intent, or knowledge on the part of the banks as to the condition of Mr. Lowes at any time." The motions were not resisted on the part of plaintiff, and were sustained. The cases were brought to this court, both upon appeals and writs of error.

O. F. Davisson and Lee Warren James, both of Dayton, Ohio, for plaintiff in error and appellant.

McMahon & McMahon and R. G. Corwin, all of Dayton, Ohio, for defendant in error and appellee.

Before WARRINGTON and DENISON, Circuit Judges, and SESSIONS, District Judge.

PER CURIAM. [1] Since the cases were plenary actions to recover money only, which was alleged to have been paid as a preference in favor of the banks, respectively, as principal, and Schaeffer, as surety, we think it clear that each was an action at law; and so properly brought here on writ of error. Warmath v. O'Daniel, 159 Fed. 87, 88, 90, 86 C. C. A. 277, 16 L. R. A. (N. S.) 414 (C. C. A. 6); Wm. Edwards Co. v. La Dow, 230 Fed. 378, 381, 144 C. C. A. 520 (C. C. A. 6); First State Bank v. Spencer, 219 Fed. 503, 505, 135 C. C. A. 253

Digitized by Google

(C. C. A. 8); Simpson v. Western Hardware & Metal Co., 227 Fed. 304, 307, et seq. (D. C.); Grant v. National Bank of Auburn, 197 Fed. 581, 591 (D. C.); Whitehead v. Shattuck, 138 U. S. 146, 151, 11 Sup. Ct. 276, 34 L. Ed. 873; Detroit Trust Co. v. Old National Bank, 155 Mich. 61, 64, 118 N. W. 729; Allen v. Gray, 201 N. Y. 504, 508, 94 N. E. 652, Ann. Cas. 1912B, 123; Maxwell v. Davis Trust Co., 69 W. Va. 276, 279, 71 S. E. 270. The appeals will therefore be dismissed.

[2, 3] In the agreement to waive a jury and to try the issues to the court, it was provided that in deciding each case the court should state its findings of fact and conclusions of law, and this was in effect carried out. The cases, however, each turned at last upon the issue whether, at the times the payments in dispute were made to the banks Schaeffer knew or had reasonable cause to believe that Lowes was insolvent; and the ultimate fact found in substance was that Schaeffer did not have such knowledge or any reason for such belief. We are disposed to treat this as a special finding, though, whether general or special, it has the effect of the verdict of a jury. Hence the only inquiries open in this court under the assignments of error are whether the evidence tends to support the ultimate finding and the finding in turn is sufficient to sustain the respective judgments. This results alike from the statutes and the decisions. Sections 649, 700, and 1011, Rev. Stat. (Comp. St. 1916, §§ 1587, 1668, 1672); Norris v. Jackson, 76 U. S. 125, 127, 19 L. Ed. 608; Runkle v. Burnham, 153 U. S. 216, 225, 14 Sup. Ct. 837, 38 L. Ed. 694; United States v. U. S. Fidelity Co., 236 U. S. 512, 527, 35 Sup. Ct. 298, 59 L. Ed. 696; Chicago, R. I. & P. R. R. Co. v. Barrett, 190 Fed. 118, 123, 124, 111 C. C. A. 158 (C. C. A. 6); Mason v. Smith, 191 Fed. 502, 503, 112 C. C. A. 146 (C. C. A. 6); Nashville Interurban Ry. Co. v. Barnum, 212 Fed. 634, 638, 639, 129 C. C. A. 170 (C. C. A. 2); United States Fidelity & G. Co. v. Board of Com'rs, 145 Fed. 144, 150, 151, 76 C. C. A. 114 (C. C. A. 8); American Sales Book Co. v. Bullivant, 117 Fed. 255, 260, 54 C. C. A. 287 (C. C. A. 9); Maryland Casualty Co. v. Orchard Land & Timber Co., 240 Fed. 364, 366, 153 C. C. A. 290 (C. C. A. 9).

[4] It cannot be doubted that there is evidence tending to support the ultimate finding. The finding rests upon the credibility of the witnesses, especially that of Schaeffer, all of whom testified in open court. Upon most careful consideration of Schaeffer's testimony, particularly in connection with his demeanor and candor while testifying, the trial judge believed him. It is virtually conceded that, if Schaeffer's testimony at the hearing below is to be believed, the finding is correct; in these circumstances we are bound to conclude, as we should be in respect of a special verdict of a jury, that the trial judge's finding is supported by the evidence. And we approve his conclusion of law that the fact so found is plainly sufficient to support the several judgments.

[5] It is, however, earnestly insisted on behalf of plaintiff that evidence has been discovered since the judgments were entered which in itself would justify, if not require, reversals. This claim and part of the evidence so discovered appear only in plaintiff's reply brief,

Digitized by Google

though they were discussed in the oral argument here. The most obvious answer to the contention is that in such circumstances we have no power to reverse, since in actions at law this court can only correct errors of the court below; and it is not pretended that the claim of newly discovered evidence has ever been called to the attention of that court. The general rule of course is, as was stated in Mexico International Land Co. v. Larkin, 195 Fed. 495, 496, 115 C. C. A. 405, 406 (C. C. A. 8):

"In an action at law the burden is on the plaintiff in error to establish the existence of those errors of which he complains, and in the absence of proof by the record that a question of law arose, and that it was presented to and ruled upon by the court below, no error is established, because none could arise concerning a question which was not presented, considered, or decided by the trial court. Southern Pacific Company v. Arnett, 126 Fed. 75, 77 [61 C. C. A. 131]," and citations.

[6, 7] Assuming, however, that where matters arising after proceedings in error have been perfected may justly call for resubmission to the trial court, reversal for that purpose would be warranted, still, apart from the question of plaintiff's lack of diligence as urged in defendant's behalf, in our judgment the evidence so far as shown or indicated is not material. Copies of six letters are shown, bearing dates in October and November, 1911, all addressed to creditors of Lowes, one located in Cincinnati (to whom two of the letters were sent), one in Indianapolis, one in St. Louis, and two in Dayton, and representing claims amounting to $24,226.50; upwards of $18,000 of this amount was held by the two Dayton creditors; and all the letters were signed in the name of Luyster & Lowes, while only one seems to have been so signed by Schaeffer. True, they contain explanations for delaying payment of these creditors, but they do not appear to relate to the real sources of Lowes' financial troubles. Those troubles mainly arose through failure to ascertain and meet liabilities due to subcontractors and materialmen connected with Lowes' government work at Ft. Sill, Okl., and with his work on a public building in Mercer county, Pa. These features were abundantly explained by the trial judge.

Counsel say in their reply brief that they found many letters, at least 100, written by Schaeffer, and, further, that this correspondence "is along the line of his letters heretofore made a part of this brief." We cannot think that letters along the same line as those copied into the brief are inconsistent with the explanations made by Schaeffer in his last testimony. It is quite conceivable that he might have written many letters, stating reasons for Lowes' delays in meeting payments, and still have been totally ignorant of Lowes' real financial condition at the times the payments in dispute were made to the banks. Hence we are not impressed with the insistence of counsel that reversals of the judgments would lead to different results. The difficulty with these cases is that plaintiff has been under the burden of proving his charges, and he has not done this; nor does the evidence proffered afford any substantial ground for believing that he can do so. Judgments cannot be founded on suspicion.

The judgments will be affirmed, with costs.

Digitized by Google

(249 Fed. 658)

MISSOURI PHONOGRAPH CO. v. TOMLINSON et al.

(Circuit Court of Appeals, Second Circuit. January 16, 1918.)

No. 109.

FRAUD ⟹20—ACTION FOR DECEIT—GROUNDS.

To maintain an action for deceit, the fraud alleged must have been perpetrated by defendants and must have actually deceived plaintiff.

In Error to the District Court of the United States for the Southern District of New York.

Action at law by the Missouri Phonograph Company against John C. Tomlinson and Millard F. Tompkins. Judgment for defendants, and plaintiff brings error. Affirmed.

Before the occurrences directly involved in this suit, and about 1890, numerous corporations were formed in divers parts of the United States for the purpose of exploiting the phonograph, then still a novelty. These companies were severally territorial licensees under certain patents, and the exclusive territory of each corporation was usually one state. The plaintiff here and below is such a corporation, and another was the New York Phonograph Company. They did not flourish, for reasons immaterial to this suit, and all seem to have gone out of business; certainly this plaintiff did, and so did the corresponding New York concern. But the use of phonographs and trade in them did not diminish, and some time prior to 1900 one Andem and others conceived the idea that the National Phonograph Company, and other persons and corporations interested in or affiliated with that company, were unjustly and unlawfully enjoying in the several states covered by the territorial licenses aforesaid the profits derived from phonograph sales.

Andem then procured powers of attorney from many of these local and discouraged, if not financially defunct, corporations, under which he was authorized to begin and prosecute, in the name (among others) of the Missouri and New York Phonograph Companies, such suits for the establishment of their respective rights as he might be advised, but at his own expense, and to terminate, settle, and compromise such suits and give releases on behalf of his principals as and when he thought best, provided, however (in the case of the Missouri Company), that he did not settle for less than $40,000. Andem began numerous actions. It does not appear whether the rights of all Andem's plaintiffs were the same or rested on identical legal principles; it is so alleged (in substance) in the complaint, was denied in the answer, and not proven at the trial. The case of the New York Phonograph Company was most vigorously pressed, and its history is recorded at large in the reports. (C. C.) 112 Fed. 822; (C. C.) 119 Fed. 544; (C. C.) 136 Fed. 600; 144 Fed. 404, 75 C. C. A. 382; (C. C.) 163 Fed. 534.

In 1909 the persons and corporations who were defendants in all of Andem's suits offered settlement, and by a written agreement Andem on behalf of all the companies that he represented (including of course this plaintiff) received $405,000, discontinued all his actions (including that in the name of this plaintiff), and covenanted to give a general release for the New York Phonograph Company executed by that company itself, and a general release on behalf of other plaintiffs (including Missouri Company) executed by himself. Andem's release on behalf of the Missouri Company was clearly invalid, unless he allotted to that corporation, out of the moneys by him received, at least $40,000, subject to payment of his interest (established in his power of attorney) of 60 per cent., or procured from Missouri Company a general release, either to the defendants or to Andem himself, for a smaller sum. After the $405,000 aforesaid had been secured to Andem, the defendants herein, who are members of the bar and had with other counsel pressed the cases aforesaid, wrote (on April 22, 1909) the following letter to Missouri Phonograph Company:

Digitized by Google

"Mr. Andem has requested us to inform the various local phonograph companies in regard to the settlement affected through us as counsel for the New York Phonograph Company, in their suit against the National Phonograph Company. This litigation has been in the courts, with varied success, for a number of years, and was finally settled. Mr. Andem, as a feature of the settlement, succeeded in compelling a recognition of the claims of seven local companies which had authorized Mr. Andem to represent them. None of these companies, in our opinion, would have been able to successfully prosecute any claim against the National Phonograph Company, or Mr. Edison, as they were not in the same position as the New York Company. But, following Mr. Andem's instructions, we insisted upon some recognition by the Edison interests of the rights of the outside local companies, before consenting to a settlement of the New York cases, and finally, after a most earnest effort, we compelled the payment of $50,000 on their behalf. After deducting Mr. Andem's percentages, there remains $20,000 for distribution among these seven local companies, and Mr. Andem desires us to inform you that, as soon as instructions are received as to whom this money should be paid over, this amount will be distributed in proper proportions to the several companies concerned."

For all purposes of settlement with Andem or with the National Phonograph Company et al., one Clancy was the Missouri Phonograph Company. He received this letter of defendants, and saw also a sort of circular letter sent out by Andem himself to all his principals (other than New York Phonograph Company), in which he gave some history of the New York Company's litigation, said that he had finally settled that case alone for $375,000, pointed out that in his opinion the other corporations represented by him had not the same grounds for successful suit as had New York Company, and stated that he had compelled, as a sort of pendent to the New York Company's settlement, delivery to him of $50,000 to cover all the other plaintiffs on whose behalf he had sued. He specifically admitted that in the case of several plaintiffs (including Missouri Company) he had exceeded his authority, but in order to get anything had been compelled "to ignore these requirements," and concluded by inviting (among others) Missouri Company to accept an allotment out of said $50,000.

This brought Clancy to New York, and he "talked the matter over" with Andem, and went to defendant's office and talked with some members of the firm; but he exhausted memory of that interview by saying he was told "that they had had a difficult time in getting any money for" plaintiffs such as Missouri Company, meaning apparently all Andem's plaintiffs except New York Phonograph Company. Subsequently and in August, 1909, Missouri Company formally released Andem in consideration of $2,177, or (apparently) 40 per cent. of $5,000, with some accumulations of interest. A year or more later Clancy discovered that the written agreement of settlement between the parties whom Andem had sued so frequently and Andem himself had not specified or declared in any way how the $405,000 paid was allotted or should be distributed, whereupon this action was brought, alleging in substance that Andem had received (by receipt of said large sum of money) at least $40,000 for the settlement of Missouri Company's suit, therefore he owed plaintiff 40 per cent. thereof, or $16,000, and that the settlement aforesaid between Andem and plaintiff had been produced by the fraud and deceit of Andem and his counsel, viz., the present defendants.

Andem was made a party defendant herein, but no service was effected. As to one member of the defendant firm the complaint was dismissed, on behalf of the others a verdict was directed at the close of plaintiff's case, and to the judgment entered accordingly plaintiff took this writ.

Carroll Sprigg, of New York City (Charles E. Le Barbier, of New York City, of counsel), for plaintiff in error.

Guthrie, Bangs & Van Sinderen, of New York City (Francis S. Bangs, of New York City, of counsel), for defendants in error.

Digitized by Google

Before ROGERS and HOUGH, Circuit Judges, and LEARNED HAND, District Judge.

HOUGH, Circuit Judge (after stating the facts as above). This action is not against Andem; it must stand or fall as against his counsel; and it rests on alleged deceit, concerning which the general principles have been sufficiently stated in Farrar v. Churchill, 135 U. S. 615, 10 Sup. Ct. 771, 34 L. Ed. 246. We have pointed out in Varley, etc., Co. v. Ostheimer, 159 Fed. 657, 86 C. C. A. at 525, that in such suits "fraud is alleged and must be proved; fraud involves deception; if the plaintiffs were not deceived, they cannot recover"; and, it may be added, there can be no recovery if the plaintiffs were not deceived by the defendants whom they sue.

Upon the trial below the deception relied on, the reason for suit, was stated thus by Clancy when on the witness stand—that he had relied on Andem's letter, and that Andem had made a false statement as to the terms of settlement in that letter, because "I [Clancy] have learned since that the [settling defendants] did not designate the companies as to the amount they should have." This means that he had never been informed that the written settlement agreement with Andem did not allocate the amount to be paid as between all the plaintiffs in the various suits pending and to be discontinued.

But by his circular letter Andem had stated what New York Company was getting, and told all his other principals that he had exceeded his authority, in that he had in fact settled all the suits, except that of the New York Phonograph Company, for $50,000; he admitted that he had no right to give a release for the Missouri Company for less than $40,000, and then Clancy came to New York to investigate the matter, saw and talked with Andem, and settled on the basis that Andem suggested. But Andem's powers undoubtedly extended to complete control of the suits that he had brought; he could press them or abandon them as he saw fit, though doubtless he remained responsible for abuse of his authority; but with him we are not concerned, otherwise than to note that he boldly said he had settled all the suits, except that of New York Company, for $50,000, and that he had perfect right to do this, so far as the parties he sued were concerned.

In this situation, the present plaintiff was at liberty to go on, and sue as best it could, either Andem for fraud, or money had and received, or the original defendants on the original causes of action; but we wholly fail to see that, under the circumstances shown, anything contained in counsel's letter was untrue, or that any duty lay upon them to state just how much Andem was allocating to the New York Company, or any other party in interest, or that the plaintiff in this case relied to its disadvantage upon anything that these defendants wrote or said. The language of their letter, and their talk as related by Clancy, amount to this; that it had been hard work to force any settlement, and difficult to get anything for the companies in the position of this plaintiff. There is nothing in this record to impugn

Digitized by Google

the truth of these statements, and the reports above noted, which any one may read, certainly substantiate one part thereof.

Judgment affirmed, with costs.

(249 Fed. 661)

THIRD AVE. RY. CO. v. MILLS.

(Circuit Court of Appeals, Second Circuit. February 13, 1918.)

No. 138.

1. CARRIERS ⚷318(7)—INJURY TO PASSENGER—COLLISION OF STREET CAR WITH VEHICLE—NEGLIGENCE.

Plaintiff, while a passenger on defendant's street car, going at moderate speed, was injured by a collision with a motor truck, which was suddenly and negligently turned upon the track from 20 to 25 feet in front of the car. Plaintiff's evidence did not show within what distance the car could have been stopped; but his counsel, by a question not germane to the cross-examination, brought out testimony from a witness for defendant, which was uncontradicted, that it could not have been stopped within less than 35 or 40 feet. *Held*, that there was no evidence of negligence on the part of defendant which would sustain a verdict for plaintiff.

2. TRIAL ⚷296(3)—INSTRUCTIONS—CURE OF ERROR.

An instruction, in an action by a passenger against a street railroad company to recover for a personal injury, that if the injury could have been avoided by the motorman by "the exercise of the highest degree of care" defendant was chargeable with negligence, *held* not reversible error, where it was also stated that what constituted the highest degree of care must be determined from all the facts and circumstances of the case.

3. TRIAL ⚷120(3)—MISCONDUCT OF COUNSEL.

The conduct of counsel for plaintiff, in an action against a street railroad company for injury to a passenger, in repeatedly referring to the matter of an existing strike, after the court had excluded any evidence on the subject as irrelevant, showed disrespect to the court, discredits any verdict in favor of his client, and might have been ground for reversal of the judgment based thereon.

In Error to the District Court of the United States for the Southern District of New York.

Action at law by Edward T. Mills against the Third Avenue Railway Company. Judgment for plaintiff, and defendant brings error. Reversed.

The action is to recover for personal injuries received by plaintiff below while a passenger on one of defendant's street cars, which collided with a motor truck on Third avenue, between Twenty-Third and Twenty-Second streets. The avenue at this point contains the north and south bound tracks of the street railway, which lie between the two rows of pillars supporting the elevated railway structure. The space between pillars in same line is 42 feet, and each line of pillars is 3½ feet from the nearest street car rail.

Plaintiff's car, south bound (i. e., on westerly track) had stopped at Twenty-Third street, and had regained a speed characterized as moderate, and estimated at 5 or 6 miles an hour. At same time the motor truck, 20 feet long, was traveling south, on west side of avenue between elevated pillars and curb, at a slightly faster rate, estimated at 7 miles per hour. In order to avoid a coal-laden vehicle, the truck turned to the east, between the railway pillars, still continuing its speed, and, when its front wheels were on the railway

---

⚷For other cases see same topic & KEY-NUMBER in all Key-Numbered Digests & Indexes

Digitized by Google

track, the street car ran into it. This occurred in broad daylight, and plaintiff, seeing contact probable, if not certain, rose from his seat, and on collision was thrown against a railing, receiving a blow said to have caused a hernia.

Whether the truck gave any signal of intent to go on railway track, was not proved. One witness said a man on the left of truck seat, not the chauffeur, "put out his hand"; but the only evidence from the truck was that it had a left-hand drive, and the witness (and only person on the truck other than the chauffeur) said he did nothing, sat on the right, and knew not what the chauffeur (who did not testify) did, if anything. Plaintiff noticed the truck on the roadway between curb and pillars, and about 30 feet ahead of car, saw it "turn right in between the pillars," and reach the street car track, when the car was 20 or 25 feet away. Collision happened almost instantly. The owner of truck was not sued in this action.

The foregoing summary is taken wholly from evidence adduced for plaintiff, who had a verdict. We notice the following assignments of error: (1) Plaintiff should have been nonsuited; (2) the court erred in charging that, if defendant's motorman by "the exercise of the highest degree of care" could have stopped the car in time to avoid collision, the jury could find defendant "guilty of negligence"; and (3) counsel for plaintiff, by improper conduct, prevented a fair trial.

Alfred T. Davison, of Brooklyn, N. Y., for plaintiff in error.

Louis Boehm, of New York City, for defendant in error.

Before WARD, ROGERS, and HOUGH, Circuit Judges.

HOUGH, Circuit Judge (after stating the facts as above). [1] The testimony for plaintiff proved a plain case of negligent driving by the motor truck; the only negligence suggested against the street car was that it did not stop as soon as it could. As to how soon it could stop there was no evidence at all, until defendant's witnesses were produced, when questions by plaintiff's counsel elicited testimony that even the emergency brake could not stop a car going at the rate stated by plaintiff in less than 35 to 40 feet. The questions so asked were not germane to anything the witness had said on direct examination. Deutschmann v. Third Ave. R. R., 78 App. Div. at page 414, 79 N. Y. Supp. 1073.

It is true (nearly always) that a jury is not bound to believe any particular witness, but they must believe some witness, or reach conclusion by comparison of divers and different statements. Here there were no differing statements on the point under consideration. Any verdict must rest on evidence, and plaintiff's evidence did not prove nor tend to show that the car could have stopped within 20 to 25 feet, or any other definite distance; while testimony deliberately sought by his counsel on cross-examination tended to show the impossibility of the hypothesis (it was no more when plaintiff rested) on which his case was founded.

Therefore the complaint should have been dismissed; a conclusion reached without any attention paid to witnesses for defendant, who testified to conduct by the motor truck even more wanton than that above indicated.

[2] That there must be a new trial, justifies notice of the other assignments. The exception to charge as to degree of care must be considered in connection with the charge as a whole, and the learned judge carefully pointed out that while the highest degree of care was

Digitized by Google

due, "what the highest degree of care is must be determined by all the facts and circumstances of the case"; that is, negligence is the lack of care under the circumstances shown, and care is the absence of negligence under the same circumstances. The circumstances vary, and they measure the care due, and therefore the negligence. It would be more accurate to apply descriptive adjectives (if they are necessary at all) to the circumstances, rather than to their result; but, since the jury were plainly told that the facts measured the care, we discover no error in the statement.

On this point we have been favored with abundant citations from many courts, but none from those whose decisions are ruling with us. Milwaukee, etc., R. R. v. Arms, 91 U. S. at page 489, 23 L. Ed. 374, and Grand Trunk R. R. v. Ives, 144 U. S. at page 417, 12 Sup. Ct. 679, 36 L. Ed. 485, sufficiently cover the unnecessary use of adjectives characterizing either negligence or care. Railroad Co. v. Varnell, 98 U. S. at page 480, 25 L. Ed. 233, is especially applicable to street conveyance; Memphis Ry. v. Bobo (C. C. A. 6) 232 Fed. at page 711, 146 C. C. A. 634 (affirmed on another point as Memphis Ry. v. Moore, 243 U. S. 299, 37 Sup. Ct. 273, 61 L. Ed. 733), is a recent statement of the rule, substantially as put in the court below, though with more numerous adjectives, of which error cannot be asserted, if and when the jury is well instructed that negligence and care are present or absent according to the facts proved.

[3] The conduct of plaintiff's trial counsel requires comment. He was evidently determined to get before the jury the fact that a strike (by whom does not appear) was at the time affecting the street car service. To that end he asked a question in cross-examination which implied that the witness was a "strike breaker." The question was excluded, and counsel told that the case had "not anything to do with the strike," and thereafter he repeatedly referred to the matter; defendant not repeating objection. There existed at the close of all the evidence nothing connecting accident and strike, and no denial or doubt of the statement of defendant's motorman that his employment antedated the strike referred to.

Whether this proceeding alone would have required reversal we do not decide; to show the importance of the matter, or its triviality, would require further exposition of facts; but we point out that defendant was not under any obligation to call attention to the matter more than once, that merely asking the questions constituted the prejudice to defendant, that repeating the suggestion or insinuation after one correction from the court was disrespect to that court, and that such a course of proceeding, in a matter sufficiently grave, discredits any verdict, and may in the appellate court vitiate the judgment rested thereon. Cosselmon v. Dunfee, 172 N. Y. 507, 65 N. E. 494; Simpson v. Foundation Co., 201 N. Y. at page 490, 95 N. E. 10. Cf. Williams v. Brooklyn, etc., Co., 126 N. Y. at page 103, 26 N. E. 1048.

Judgment reversed, and new trial ordered.

Digitized by Google

(249 Fed. 664)

CHICAGO GREAT WESTERN R. CO. v. POSTAL TELEGRAPH-CABLE CO.

(Circuit Court of Appeals, Seventh Circuit. February 28, 1918.)

No. 2548.

TELEGRAPHS AND TELEPHONES ⟹11—CONTRACT BETWEEN RAILROAD AND TELEGRAPH COMPANIES—"EXCHANGE" OF SERVICES.

In 1888, complainant, a railroad company, and defendant, a telegraph company, entered into an elaborate contract to continue for 50 years, with the privilege of renewals for like successive terms by either party, for the joint operation and maintenance of telegraph lines along the railroad right of way and the exchange of services, which provided, inter alia, that defendant should transmit over its lines on the railroad line all messages relating to railroad business free, and all such messages over its lines off the railroad line free to an amount not exceeding $10,000 per year, at its regular rates, and all messages over that amount at half rates. A corresponding provision required complainant to transport men and materials for defendant for use on its line of road free, and for use off its line of road to an amount not exceeding $10,000 per year free, and above that amount at half rates. The Interstate Commerce Commission having ruled that such contracts with respect to exchange of "off line" services were in violation of the Interstate Commerce Acts, Congress by the amendatory act of June 18, 1910 (36 Stat. 544, c. 309, § 7 [Comp. St. 1916, § 8563]), extended the act to telegraph, telephone, and cable companies, and made it unlawful to charge unjust or unreasonable rates, but provided that "nothing in this act shall be construed to prevent telegraph, telephone and cable companies from entering into contracts with common carriers for the exchange of services," and further that it should not be construed to prevent the exchange of passes and franks between telegraph, telephone, and cable companies and other common carriers for the use of their officers, agents, and employés. *Held:* (1) That such legislation was enacted in the light of public history, showing the interdependent relations between railroads and telegraphs as commercial agencies, and that similar contracts, covering practically all of the railroads in the country, had been in force almost from the beginning, and with intent to legalize the same; (2) that "exchange" of services did not mean that services rendered must be equal in value to those received at established rates, otherwise the provisions were unnecessary and without practical meaning; (3) that there is no basis for distinction between "on line" and "off line" services, especially in view of the fact that cable companies, as to which there could be no exchange of "on line" services, were expressly included.

[Ed. Note.—For other definitions, see Words and Phrases, First and Second Series, Exchange.]

Appeal from the District Court of the United States for the Eastern Division of the Northern District of Illinois.

Suit in equity by the Chicago Great Western Railroad Company against the Postal Telegraph-Cable Company. Decree for defendant, and complainant appeals. Reversed.

For opinion below, see 245 Fed. 592.

Ralph M. Shaw, of Chicago, Ill., for appellant.

Jacob Dittus, of Chicago, Ill., for appellee.

Before BAKER, KOHLSAAT, and ALSCHULER, Circuit Judges.

⟹For other cases see same topic & KEY-NUMBER in all Key-Numbered Digests & Indexes

Digitized by Google

BAKER, Circuit Judge. In 1888 the parties entered into a railroad-telegraph contract for exchange of services. They renewed it after the 1910 amendment of the Interstate Commerce Act and faithfully observed its terms until after the Interstate Commerce Commission's conference ruling of March 28, 1916. In essential scope the contract in suit is the same as one set forth in Baltimore & O. Rld. Co. v. Western Union Tel. Co. (D. C.) 241 Fed. 162. That case (affirmed, same title, 242 Fed. 914, 155 C. C. A. 502) is also referred to for a recital of amendments of the Interstate Commerce Act and of various pronouncements of the Interstate Commerce Commission.

Appellant unsuccessfully prosecuted this suit to enjoin appellee's repeated actions at law to collect full rates for "off line" telegrams and to compel appellee to accept railroad service in exchange under the contract.

As the Western Union Case is pending in the Supreme Court, we have taken this case now only on the representations of the Postal Company that there are important facts in this record which were not adduced in the Western Union Case and that it would be advantageous to have both records before the Supreme Court at the same time.

We find no additional facts that in our judgment enlarge or change the questions for decision. They arise from the following provisions in the Interstate Commerce Act:

"Nothing in this act shall be construed to prevent telephone, telegraph, and cable companies from entering into contracts with common carriers for the exchange of services."

"This provision [against passes and free transportation] shall not be construed to prohibit the privilege of passes or franks, or the exchange thereof with each other, for the officers, agents, employés and their families of such telegraph, telephone, and cable lines, and the officers, agents, employés and their families of other common carriers subject to the provisions of this act." Comp. St. 1916, § 8563.

We approve and adopt the propositions declared in the Western Union Case, substantially as follows:

(a) "Exchange" means the giving of one thing for another. It excludes the idea of first measuring the respective things in money value and then settling or paying any difference. To construe the act in its entirety as requiring a reference to monetary scales is to render the proviso meaningless. "Exchange" and "services" are without any limitation or qualification put upon them by the language employed by Congress; and therefore the companies may lawfully give, each to the other, any service of the kinds they perform for the public. As the language is clear, direct and unambiguous, there is no warrant for the interpolation of a distinction between "on line" and "off line" services.

(b) Congress adopted the amendment of 1910 in the light of public history, showing that generations ago the railroad and the telegraph started and have since continued hand in hand as coservitors of the public under the well-known reciprocal contracts which were first challenged a few years prior to 1910. Congressional purpose in the 1910 amendment, therefore, was to end the challenge.

Digitized by Google

Additionally we suggest:

(c) Emphasis may be given to "contract" as well as to "exchange" and "service." Full and unrestricted right to contract with each other is what the plain language of the proviso gives. If one may deal with the other for "off line" service only as the Interstate Commerce Act compels carriers to deal with the public, then no contract rights, as distinguished from legislatively declared legal obligations, can exist, and the grant of power is in that respect emasculated.

(d) So entwined and interdependent are the reciprocal obligations and undertakings that no part of the contract is separable from the others. Inasmuch as Congress supposedly was aware of this situation, a confession by appellee that Congress intended to legitimatize the exchange of "on line" services is a confession, in our judgment, that Congress had the intent to approve the known exchange of services rather than the intent to split the unsplittable and from the fragments to make for the parties a new contract.

(e) Telegraph companies were not brought under control to the same extent as railroad companies. For the latter, rates may be fixed; respecting the former, there was only the bringing into national law of the common law requirement that rates be reasonable. If a telegraph company should believe that a published railroad rate for "off line" service was unreasonable, it could go before the Interstate Commerce Commission and that body could fix a reasonable rate. But, places changed, the railroad company could only contest in court the reasonableness of a particular rate for services already rendered, with the telegraph company free to promulgate new rates according to its own judgment of reasonableness. Did Congress intend that this inequality of situation should control? Or did not Congress rather intend that their mutual agreements for exchange of services should prevail?

(f) "Evils to be remedied," as a part of "the history of the times," may be looked to in confirmation of the unambiguous language of the proviso. We perceive no evils in the contracts, no injury to the public; appellee suggests none; and the Interstate Commerce Commission in 1906 reported that:

> "So far as we can now see, the full performance of such contracts by the carriers with whom they are made would not affect any public or private interest adversely." 12 Interst. Com. Com'n R. 10.

(g) Appellee is a telegraph company. But cable companies are included in the same terms. Appellee enumerates "on line" services it renders for appellant; but so far has failed to state how an undersea cable could be of "on line" service to a railroad, or how a railroad could be of "on line" service to a cable. Appellee's contention that the proviso authorizes nothing but contracts for exchange of "on line" services (services on a common or joint right of way) therefore comes to this: Railroad and cable companies are authorized to contract with each other, but only for the performance of unperformable conditions.

(h) Appellee's contest arose wholly over compensation for telegraphic messages. Under the second proviso hereinabove quoted ap-

Digitized by Google

pellee could lawfully issue telegraphic franks to the officers and agents of appellant. But is it unlawful to do under contract and for compensation what may lawfully be done without contract and without compensation?

Decree reversed, with direction to grant the prayers of the bill.

(249 Fed. 667)

PITTSBURGH & SOUTHERN COAL CO. v. OTIS MFG. CO.

(Circuit Court of Appeals, Fifth Circuit. March 16, 1918.)

No. 3110.

1. NAVIGABLE WATERS ⟹36(3)—RIPARIAN OWNERS—RIGHTS OF.
Under Civ. Code La. arts. 455, 457, land between a levee and a navigable river is the property of a riparian proprietor, though subject to public use.

2. NAVIGABLE WATERS ⟹33—RIPARIAN PROPRIETOR—RIGHTS OF PUBLIC.
The right which the public in Louisiana has to use the banks of navigable rivers does not enable one other than a riparian proprietor to appropriate part of such bank to his private use, and a riparian proprietor has such an interest, distinct from that of the public, as entitles him to recover for another's appropriation of a part of the bank to a private use.

3. NAVIGABLE WATERS ⟹33—RIPARIAN PROPRIETOR—RIGHTS OF.
Const. La. art. 290, enabling riparian owners whose property is bounded by a navigable stream, subject to stated conditions, to become the agency for making public use of the batture or banks owned by them, does not limit the right of a riparian proprietor to complain of an unauthorized private use of his property by another.

In Error to the District Court of the United States for the Eastern District of Louisiana; Rufus E. Foster, Judge.

Action by the Pittsburgh & Southern Coal Company against the Otis Manufacturing Company. There was a judgment for defendant, dismissing the petition, and plaintiff brings error. Reversed.

R. C. Milling, of New Orleans, La. (Foster, Milling, Saal & Milling, of New Orleans, La., on the brief), for plaintiff in error.

H. C. Cage, of New Orleans, La. (Cage, Baldwin & Crabites, of New Orleans, La., on the brief), for defendant in error.

Before WALKER and BATTS, Circuit Judges, and NEWMAN, District Judge.

WALKER, Circuit Judge. This writ of error presents for review a judgment sustaining an exception of no cause of action to the petition of the plaintiff in error (which will be called the plaintiff) and dismissing the same. The petition as amended showed the following state of facts:

The plaintiff now is, and for many years has been, the owner of described land in the city of New Orleans which fronts on the Mississippi river, together with the batture and batture rights appertaining thereto, a portion of which land it leased for several years to the defendant in error (which will be called the defendant), which occupied

---

⟹For other cases see same topic & KEY-NUMBER in all Key-Numbered Digests & Indexes

Digitized by Google

it under such lease until 1915, when the lease was annulled. After defendant's rights as lessee ceased, it continued, without plaintiff's consent, to occupy and use the part of the formerly leased land which is between the levee and the river, drove piling thereon, built a wharf and a pen for its logs, and used the property for its own private purposes. The relief sought included a judgment ejecting the defendant and enjoining and prohibiting it from further trespassing upon or attempting to use or convert to its own private use the part of the plaintiff's land between the levee and the water's edge, and an award of compensation for the occupation and use by the defendant since the lease expired.

The ground upon which the trial court's action was based is disclosed by the following statement found in the opinion rendered by the presiding judge:

> "It is evident that the piling complained of is driven in the Mississippi river, and that, if the defendant is occupying any portion of the batture belonging to the plaintiff, it is entirely outside the levee. As this portion of the property is within the jurisdiction of the board of commissioners of the port of New Orleans, and not under the control of the plaintiff, the exception will be maintained and the suit dismissed."

[1, 2] What is shown and complained of is the unauthorized occupation and use by the defendant for its own private purposes of property belonging to the plaintiff. That the plaintiff's rights in the land in question are subject to public uses is not questioned. The use complained of is a private one, not a public one. That the land between a levee and the river is the property of the riparian proprietor, subject to public use, is a proposition well settled in the law of Louisiana. Mathis v. Board of Assessors, 46 La. Ann. 1570, 16 South. 454; Civil Code of Louisiana, arts. 455, 457. That another's unauthorized use of that space for a private purpose gives rise to a right of action in favor of the riparian proprietor has been authoritatively decided. Carrollton R. Co. v. Winthrop, 5 La. Ann. 36. That the right which the public has to use the banks of navigable rivers does not enable one other than the riparian proprietor to appropriate a part of such bank to his private use is a proposition not fairly open to question. Lyons v. Hinckley, 12 La. Ann. 655; Duverge v. Salter, 6 La. Ann. 450; Cochran v. Dry-Dock Co., 30 La. Ann. 1365.

Nothing said or decided in the case of Warriner v. Board of Commissioners, 132 La. 1098, 62 South. 157, is in conflict with either of the above-stated propositions. That suit was an attempt to prevent the continuance of the public use to which a batture or accretion to the bank of a navigable river was put by the public agency intrusted with the exercise and regulation of such use. In the instant case the use complained of is a purely private one, and no claim is made the recognition and enforcement of which could impair or interfere with the public use to which the property in question is subject. The alleged use by the defendant is inconsistent with the enjoyment by the public of the use of the bank to which it is entitled. The plaintiff as the riparian proprietor has such an interest, separate and distinct

Digitized by Google

from that of the public at large, as entitles it to complain of the appropriation of the land in question to a private use to which it is not subject to be put without its consent. The petition does not assert the claim that the plaintiff itself, without the permission of the official body intrusted with the regulation of the public use of the land in question, could use it as the defendant does without any rightful authority whatever.

[3] We have been referred to article 290 of the Constitution of Louisiana as having some bearing on the question presented for decision. That article reads as follows:

"Riparian owners of property on navigable rivers, lakes, and streams, within any city or town in this state having a population in excess of five thousand shall have the right to erect and maintain on the batture or banks owned by them, such wharves, buildings and improvements as may be required for the purposes of commerce and navigation, subject to the following conditions, and not otherwise, to wit: Such owners shall first obtain the consent of the council, or other governing authority, and of the board of levee commissioners, within whose municipal or levee district jurisdiction such wharves, buildings, and improvements are to be erected, and such consent having been obtained, shall erect the same in conformity to plans and specifications which shall have been first submitted to, and approved by, the engineer of such council, or other governing authority; and when so erected, such wharves, buildings, and improvements shall be, and remain, subject to the administration and control of such council, or other governing authority, with respect to their maintenance and to the fees and charges to be exacted for their use by the public, whenever any fee or charge is authorized to be and is made; and shall be and remain subject to the control of such board of levee commissioners, in so far as may be necessary for the maintenance and administration of the levees in its jurisdiction. The council, or other governing authority, shall have the right to expropriate such wharves, buildings, and improvements, whenever necessary for public purposes, upon reimbursing the owner the cost of construction, less such depreciation as may have resulted from time and decay; such reimbursement, however, in no case to exceed the actual market value of the property: Provided, that nothing in this article shall be construed as affecting the rights of the state, or of any political subdivision thereof, or of the several boards of levee commissioners to appropriate without compensation such wharves, buildings, and improvements, when necessary for levee purposes."

That provision enables riparian owners of a described class, subject to stated conditions and qualifications, to become the agency for making a public use of the batture or banks owned by them. Nothing in it indicates a purpose to limit or qualify the right of a riparian proprietor to complain of an unauthorized private use of his property by another. The conclusion is that the court was in error in sustaining the exception and dismissing the petition.

The judgment to that effect is reversed.

Digitized by Google

(249 Fed. 670)

CAMPBELL v. KRAUSS.

(Circuit Court of Appeals, Third Circuit. May 10, 1918.)

No. 2352.

1. APPEAL AND ERROR ⟹231(9)—PRESENTATION OF GROUNDS OF ERROR—SPECIFIC OBJECTIONS—NECESSITY.

In a suit to set aside a preference, based on Bankruptcy Act July 1, 1898, c. 541, § 60b, 30 Stat. 562, as amended by Act June 25, 1910, c. 412, § 11, 36 Stat. 842 (Comp. St. 1916, § 9644), providing for the vacation of preferential transfers, etc., made in four months of bankruptcy, providing the person receiving same, etc., shall then have reasonable cause to believe that the transfer would effect a preference, the failure of the trial court to use the word "reasonable" in connection with the statutory definition, while erroneous, furnishes no ground for complaint on appeal, where the objection to the court's charge was general, and did not point out the omission, which would otherwise have been corrected, as rule 10 (224 Fed. vii, 137 C. C. A. vii) requires objections to the charge to be specific and not general.

2. TRIAL ⟹217—INSTRUCTIONS—PROPRIETY.

Where the court, in connection with a charge cautioning the jury to stick to the real issue in the case, used the phrase "to draw a red herring across the trail," but there was nothing to show that the phrase was directed against defendant any more than against plaintiff, defendant cannot complain of the use of the phrase.

In Error to the District Court of the United States for the Eastern District of Pennsylvania; Oliver B. Dickinson, Judge.

Action by Sidney L. Krauss, as trustee in bankruptcy, against William J. Campbell. There was a judgment for the trustee, and defendant brings error. Affirmed.

William B. Linn, J. F. Shrader, and H. B. Gill, all of Philadelphia, Pa., for plaintiff in error.

James S. Rogers, of Philadelphia, Pa., for defendant in error.

Before BUFFINGTON, McPHERSON, and WOOLLEY, Circuit Judges.

BUFFINGTON, Circuit Judge. In the court below Krauss, trustee in bankruptcy of Mrs. Minnie Glatterer, recovered a verdict against William J. Campbell, for the amount of an alleged preferential payment made by the bankrupt to the latter within the four months preceding bankruptcy. On entry of judgment on such verdict Campbell sued out this writ.

[1] The suit was based on clause "b," section 60, of the Bankruptcy Act, which as amended June 25, 1910, provides:

"*b*. If a bankrupt shall have procured or suffered a judgment to be entered against him in favor of any person or have made a transfer of any of his property, and if, at the time of the transfer, or of the entry of the judgment, or of the recording or registering of the transfer if by law recording or registering thereof is required, and being within four months before the filing of the petition in bankruptcy or after the filing thereof and before the adjudication, the bankrupt be insolvent and the judgment or transfer then operate as a preference, and the person receiving it or to be benefited thereby, or his

⟹For other cases see same topic & KEY-NUMBER in all Key-Numbered Digests & Indexes

Digitized by Google

agent acting therein, shall then have reasonable cause to believe that the enforcement of such judgment or transfer would effect a preference, it shall be voidable by the trustee and he may recover the property or its value from such person. And, for the purpose of such recovery, any court of bankruptcy, as hereinbefore defined, and any state court which would have had jurisdiction if bankruptcy had not intervened, shall have concurrent jurisdiction."

Under four of the five assignments of error it is now contended the cause should be reversed because the court in its charge omitted to use the word "reasonable" in connection with cause, in other words, to use the words of the statute quoted, viz. "shall have had reasonable cause to believe." Of the propriety of employing on its own motion the statutory language of "reasonable cause," the court itself was well aware; its opinion on the motion for a new trial showing that the omission was an inadvertence and disclosing the court's surprise upon discovering it. Of the obligation of the court to quote the statutory language, if requested by counsel, there can be no question. But assuming, as we do, the court's duty to follow the words of the statute, and the litigant's right to compel it to do so by timely and proper request, are we now, in view of the atmosphere of the trial, compelled to reverse this case, which has already been tried once before, and send it back for a new trial by reason of the court's omission to use the word "reasonable" in connection with cause? After an examination of the record we hold we are not. That record shows all the proofs the defendant produced were received; those proofs were fully discussed, and the cause was submitted to the jury so fully and fairly in the charge that, with the exception of the omission of the word "reasonable" and the use by the court of an illustration, no complaint was made to such charge. At the conclusion of the charge the counsel for defendant took an exception, as follows:

"I except, if the court please, to the definition of the cause as your honor described it in the charge."

What was meant by this exception? What was said, or omitted to be said, by the judge? What had counsel in view? If it was the omission of the word "reasonable," which is now complained of, why was the omission not then and there called to the attention of the court? If it had been, the omission would undoubtedly have been rectified. And the fact that the attention of the court was not then and there called to the omission shows that, if noticed, the omission was not regarded as material and important, or, if not noticed, the omission was of such inconsequential moment as not to then challenge attention. That in point of fact the exception was of a general, abstract nature, and not a specific objection to the omission of the statutory word "reasonable," "reasonable cause" is indicated by the fact that when the assignment of error was drawn counsel quoted almost six pages of the court's charge as the basis of its exception, viz. "to the definition of cause as your honor described it in the charge." An examination of these six pages shows so wide a range of discussion and such various phases of the testimony as to constitute a correspondingly wide field of possible objection. But that is precisely the situation to which our rule 10 (224 Fed. vii, 137 C. C. A. vii) is addressed,

Digitized by Google

which requires that "exceptions to the charge * * * shall be specific and not general."

It suffices to say that the exception in this case was not specific, it did not call the attention of the judge to the omission now complained of, and to reverse this case now would be a reversal for that which the defendant could have had righted, had he called attention to the desired correction, but which he evidently did not then regard as of sufficient importance to specifically call to the attention of the court as our rule requires. We are not inclined to countenance a departure from this rule by either court or counsel. It forbids general exceptions, and courts should decline to allow exceptions of that nature, but should insist that, if exceptions are allowed, they should, as the rule provides, be specific. Such specifications challenge the attention of the court and give it an opportunity to at once correct those omissions, misstatements, and missteps which naturally occur in charges. Such particularity of exception also insures the atmosphere of the trial in reference to alleged error will be grasped by an appellate court, for it is quite clear that, if the trial judge insists on a specific statement of error, that specific ground and that specific error will alone be reviewed by the appellate court. On the other hand, a general and nonspecific exception makes it possible for an appellate court to be led to inadvertently reverse a case on a question which was not raised or decided in the court below.

[2] Little need be added as to the remaining assignment, which complains of the court's use of the phrase "to draw a red herring across the trail." Read in its context, it is not clear that this was addressed to the defendant, his witnesses, or his theory of the case. It applied equally to plaintiff and defendant, and was used simply, as the court stated, to caution the jury to stick to the real issue in the case, or, as the trial judge put it:

> "Now I don't mean to imply that there has been resort to any effort of that kind by anybody in this case, but I emphasize it to illustrate the importance of your keeping your minds right down to the one question in this case to which I have called your attention, because as you decide that so should your verdict be."

Finding no error in the record, the judgment below is affirmed.

(249 Fed. 672)

GARRISON v. KURT.

In re FLAHERTY et ux.

(Circuit Court of Appeals, Eighth Circuit. February 28, 1918.)

No. 5018.

1. COURTS ⟹359—LOCAL LAW—CHATTEL MORTGAGES.
   The question of the validity of a chattel mortgage given by the bankrupts is one of local law.
2. CHATTEL MORTGAGES ⟹190(2)—VALIDITY.
   Where the owner of a stock of goods sold the same to the bankrupts, taking a chattel mortgage, which he promptly placed on record and

⟹For other cases see same topic & KEY-NUMBER in all Key-Numbered Digests & Indexes

Digitized by Google

reported to the commercial agencies, the mortgage, which provided for certain monthly payments to the owner, must be deemed valid as against subsequent creditors of the bankrupts; it appearing that the owner at all times asserted and protected his rights.

3. BANKRUPTCY ⟹213—CHATTEL MORTGAGES—ENFORCEMENT.

Where, as part of an exchange and sale, claimant transferred a stock of goods and real property to the bankrupts, taking a chattel mortgage on the goods and a mortgage on the real property, as well as a mortgage on unthreshed grain, claimant, being under no greater duty than the trustee, could not, on bankruptcy proceedings against his transferees, be required to pursue the grain, which one of the bankrupts had threshed, absconding with the proceeds, or, on a bare assertion that it was overvalued, to take the real property and give credit for the amount at which it was valued, before enforcing his chattel mortgage on the stock of goods.

Appeal from and Petition to Revise Order of the District Court of the United States for the District of Kansas; John C. Pollock, Judge.

In the matter of the bankruptcy of Frank A. and Ella Flaherty. From an order awarding Charles R. Kurt a secured claim on the proceeds of a stock of merchandise by virtue of a chattel mortgage given him by the bankrupt, M. E. Garrison, trustee in bankruptcy, appeals, and also petitions to revise. Petition to revise dismissed, and order affirmed.

E. L. Foulke, of Wichita, Kan. (Jesse D. Wall, of Wichita, Kan., on the brief), for appellant.

C. G. Yankey, of Wichita, Kan. (R. L. Holmes and W. E. Holmes, both of Wichita, Kan., and C. C. Calkin, of Kingman, Kan., on the brief), for appellee.

Before HOOK, CARLAND, and STONE, Circuit Judges.

HOOK, Circuit Judge. This is an appeal by the trustee in bankruptcy from an order awarding Charles R. Kurt a secured claim on the proceeds of a stock of merchandise, etc., at Cheney, Kan., by virtue of a chattel mortgage given him by the bankrupts, Frank A. and Ella Flaherty, husband and wife, to secure their note for $9,855.42. The property was sold by the trustee, and the proceeds substituted. The principal contention of the trustee is that the mortgage was void. It contained these provisions:

"This mortgage to cover all of the merchandise or fixtures with and a part of said stock now and all merchandise or fixtures acquired during the life of the mortgage. Fifty per cent. of the gross receipts from the sale of said stock is to be applied weekly as part payment of the note secured by this mortgage."

The evidence at the hearing disclosed the following: The claimant had owned the stock, and the note was for a balance the bankrupts owed him on a sale and exchange of it and other properties. The stock was then free from commercial debts incurred by the claimant. The mortgage was given August 30, 1915, and was promptly placed of record and reported to the commercial agencies. The bankrupts took possession, conducted the business in the usual retail way, and made purchases to keep the stock in condition. The traveling

Digitized by Google

salesmen, through whom the purchases were made, were verbally informed of the mortgage. Pains were taken to do this. According to an agreement that was part of the transaction a brother of the claimant was employed by the bankrupts as a salesman, and also to act as claimant's personal representative, to see that half of the gross receipts was applied to the mortgage debt. The bankrupts discharged him October 2, 1915. Thereafter for a couple of months the claimant himself frequently visited the store to look after his interests. In these two periods payments aggregating $1,350 were made on the mortgage debt from the store receipts. On December 3d Frank A. Flaherty, one of the bankrupts, having recently absconded with the proceeds of other property mortgaged to the claimant, the latter went into the store and remained there until December 29th, when Mrs. Flaherty had the locks changed and ousted him. Shortly afterwards the proceedings in bankruptcy were begun. The creditors of the bankrupts, excepting one with a small claim, had both actual and constructive notice of the mortgage when they extended credit. The claimant's demand is a just one, and in the transaction and his subsequent conduct he acted in the utmost good faith and without intention to hinder, delay, or defraud any one.

Upon the foregoing facts, the referee, after an exhaustive review of the statutes and the decisions of the Supreme Court of Kansas, held the mortgage valid and allowed the claimant a secured claim on the proceeds of the mortgaged property for the balance due him. The trial court affirmed the order of the referee.

[1, 2] The question of the validity of the mortgage is one of local law. We think the case is fairly within Frankhouser v. Ellett, 22 Kan. 127, 31 Am. Rep. 171, Howard v. Rohlfing & Co., 36 Kan. 357, 13 Pac. 566, Whitson v. Griffis, 39 Kan. 211, 17 Pac. 801, 7 Am. St. Rep. 546, Sedgwick City Bank v. Mercantile Co., 45 Kan. 346, 25 Pac. 888, and Atchison Saddlery Co. v. Gray, 63 Kan. 79, 64 Pac. 987, and that the trial court and the referee were right. All the features relied on to invalidate the mortgage—retention of possession by the mortgagors and their authority to make sales and to retain receipts—have been held insufficient, when qualified by conditions like those here. The case at bar is distinguishable from Rathbun v. Berry, 49 Kan. 735, 31 Pac. 679, 33 Am. St. Rep. 389, and Humphrey v. Mayfield, 63 Kan. 208, 65 Pac. 234. Here the authority to sell was not without limitation or provision with respect to the proceeds. The terms of the mortgage and the conduct of the parties show that the sales were to be in the usual course of the retail trade from day to day, and not in bulk or at some distant, indefinite time, at the will of the bankrupts; also that the proportion of the gross receipts to be paid the claimant and applied on the mortgage debt was not left to their decision, but was definitely fixed, and further that the proportion to be retained was not unreasonable for the costs and expenses of the business. Moreover, the times when the receipts were to be applied on the debt was agreed to be weekly, and were not calculated, as in Humphrey v. Mayfield, to "fence off * * * creditors for a period of four years." There was no fraud or illegality in the mortgage, the supplemental agree-

Digitized by Google

ment, and the conduct of the claimant. The default of the bankrupts was contrary to their undertakings to the claimant, who did the best he could to protect his rights, and, as we have seen, acted in good faith.

[3] The note above referred to was also secured by a mortgage upon a piece of real property and by a second mortgage upon some unthreshed grain in another county. In the sale and exchange the bankrupts had taken the real property at a valuation of $4,000, which is said to be more than it was worth. Flaherty, one of the bankrupts, went and threshed the grain, sold it without claimant's consent, paid the first mortgage, and absconded with the balance of the proceeds. On this it is urged that, before enforcing his mortgage on the stock of goods, claimant should take the real property and give credit for $4,000, and should also follow the grain and exhaust the equity in it. No ground was shown for disturbing the original transaction between the parties, or the basis of the valuations on which it was made, other than the bare assertion of a less actual value of the particular item; nor did it appear that the claimant interfered with the right of the trustee in the grain or was under a greater duty to seek it. Manifestly these contentions are without merit.

There is also a petition to revise. It will be dismissed.

The order is affirmed.

(249 Fed. 675)

RAYDURE v. LINDLEY et al.

TIPTON v. SAME.

(Circuit Court of Appeals, Sixth Circuit. April 2, 1918.)

Nos. 3067, 3069.

1. MINES AND MINERALS ⚷58—OIL AND GAS LEASE—VALIDITY.

An oil and gas lease, granted in consideration of $1 actually paid, under which the lessee covenanted to complete a well within one year or to pay 10 cents per acre yearly in advance for each additional year that such completion was delayed, and further covenanted to pay the lessor one-eighth of all oil produced, is not invalid, during the first year or within a reasonable time during which an implied covenant to commence operations under penalty of forfeiture may be enforced, either by reason of the smallness of the consideration or the reservation of a right to the lessee to surrender the lease for cancellation on payment of $1.

2. DEEDS ⚷49—EXECUTION—VALIDITY.

A deed calling for execution by three persons as grantors, and deposited, together with the purchase price, with a third party, after its execution by two of them, to await the other signature, is incomplete as to all, and a later deed to another person, executed and delivered by the three grantors, will have priority.

3. DEEDS ⚷49—EXECUTION—VALIDITY—WAIVER OF CONDITION.

Where the condition that a deed should be executed by three persons as grantors was imposed, not merely by the grantee, but by the two grantors who executed the instrument, the grantee cannot complete his title by waiving execution by the third grantor or taking possession of the land, though such third grantor had no legal interest in the property.

⚷For other cases see same topic & KEY-NUMBER in all Key-Numbered Digests & Indexes

Digitized by Google

Appeals from the District Court of the United States for the Eastern District of Kentucky; Andrew M. J. Cochran, Judge.

Suit by John W. Lindley and others against W. S. Raydure, in which Thomas Tipton intervened. There was a decree for complainants (239 Fed. 928), and defendant and Thomas Tipton severally appeal. Affirmed.

F. A. Baldwin, of Bowling Green, Ohio, Hugh Riddell, of Irvine, Ky., and Ed. C. O'Rear, of Frankfort, Ky., for appellants.

A. R. Burnam, Jr., of Richmond, Ky., O. B. Harris, of Sullivan, Ind., and R. W. Smith, of Irvine, Ky., for appellees.

Before KNAPPEN, MACK, and DENISON, Circuit Judges.

MACK, Circuit Judge. The facts in this case are fully set forth in the opinion of Judge Cochran (D. C.) 239 Fed. 928. We add thereto but one additional fact; that, while the certificates of the record of the Raydure leases postdated those of appellees, Raydure's leases were the first to be lodged for record. The evidence establishes, however, that Raydure had actual knowledge of the Huntsman leases when the leases to him were executed.

[1] 1. We concur in Judge Cochran's conclusion on the principal legal question before us, that in Kentucky an oil and gas lease, granted in consideration of $1 actually paid, under which the lessee covenants to complete a well within one year or to pay 10 cents per acre yearly in advance for each additional year that such completion is delayed, and further covenants to pay to the lessor one-eighth of all oil produced, is not invalid during the first year or within the reasonable time during which an implied covenant to commence operations under penalty of forfeiture may be enforced, either by reason of the smallness of the consideration or the reservation of the right of the lessee on payment of $1 to surrender the lease for cancellation.

His able and exhaustive exposition of the reasons therefor, and his critical analysis of the cases in Kentucky and elsewhere bearing thereon, render any further discussion superfluous. We add only that the very recent opinion in Dinsmoor v. Combs, 177 Ky. 740, 198 S. W. 58, does not touch the questions before us.

2. Judge Cochran's opinion on questions of facts was oral; it suffices to say that we concur in his conclusions, based on an examination of the witnesses in open court, that the provision in appellees' lease from Tipton for a royalty of 8 per cent. as printed in the form lease, instead of one-eighth of the oil produced, as verbally agreed upon, was due, not to any fraud, but to a mutual mistake of fact based upon Huntsman's honest belief that the provisions were equivalent, and that reformation of the instrument, as decreed, is the proper relief.

[2, 3] 3. We concur, too, in Judge Cochran's conclusion that title to the surface of the Pitts property is in appellees. A deed calling for execution by three persons as grantors and deposited together with the purchase price, with a third party after its execution by two of them, to await the other signature, is incomplete as to all of them; a later deed to another person, executed and delivered by the three grantors, will have priority. The evidence justifies the conclusion that this

Digitized by Google

condition was imposed, not merely by the grantee, but by the two grantors who executed the instrument; that they did not intend the deed to be complete until the third grantor, by executing it, indicated his assent to the transaction. Under these circumstances, the grantee could not complete his title by waiving execution by the third grantor or taking possession of the land, even though this third grantor had no legal interest in the property.

Decree affirmed.

(249 Fed. 677)

ATCHISON, T. & S. F. RY. CO. et al. v. SPILLER.

(Circuit Court of Appeals, Eighth Circuit. March 11, 1918.)

No. 4819, with Nos. 4820–4827.

CARRIERS ⚷202—UNREASONABLE RATES—DAMAGES.

Where a shipper has paid a rate afterwards declared by the Interstate Commerce Commission to be excessive, he may recover as damages the difference between the excessive rate and the rate declared to be just and reasonable by the Commission, without proof of actual injury.

On motion for rehearing. Former opinion modified, but motion for rehearing denied.

For former opinion, see 246 Fed. 1, 158 C. C. A. 227.

Before SANBORN and CARLAND, Circuit Judges, and BOOTH, District Judge.

CARLAND, Circuit Judge. Since the opinion of this court in the above case was filed, the Supreme Court has decided in Southern Pacific Company et al. v. Darnell-Taenzer Lumber Company et al., 245 U. S. 531, 38 Sup. Ct. 186, 62 L. Ed. 451 (January 21, 1918), that, where a shipper has paid a rate afterwards declared to be excessive by the Interstate Commerce Commission, he may recover as damages the difference between the excessive rate and the rate declared to be just and reasonable by the Commission, without proof of actual injury. It results that anything said in the opinion of this court contrary to the above decision is overruled. Our judgment, however, was not based alone upon our opinion as to what was the lawful measure of damages, but on other grounds mentioned in the opinion to which we still adhere.

The motion for a rehearing is therefore denied.

⚷For other cases see same topic & KEY-NUMBER in all Key-Numbered Digests & Indexes

Digitized by Google

(249 Fed. 678)

UNITED STATES v. NASHVILLE, C. & ST. L. RY.

(Circuit Court of Appeals, Sixth Circuit. April 2, 1918.)

No. 3086.

1. INTERNAL REVENUE ⟹25—CORPORATIONS—TAXES—"FALSE."

Under Act Aug. 5, 1909, c. 6, § 38, 36 Stat. 112, imposing an excise tax of 1 per cent. on the net income of corporations, and providing for a new assessment in case of false and fraudulent reports, and for recovery of additional taxes, the word "false" means untrue or incorrect, and does not necessarily mean "intentionally" or "fraudulently false."

[Ed. Note.—For other definitions, see Words and Phrases, First and Second Series, False.]

2. INTERNAL REVENUE ⟹28—PAYMENT—ACTION.

It is the general rule, applicable, not only to customs duties, but to internal revenue taxes, that a common-law action of debt lies in favor of the government whenever, by accident, mistake, or fraud, the government has not received full payment of duties and excise taxes.

3. INTERNAL REVENUE ⟹28—REMEDIES—STATUTORY REMEDIES.

In an action to recover internal revenue taxes, such as an excise tax on corporations, the rule which denies the use of any but the statutory remedy has no application to the general government, unless clearly and specifically so declared.

4. INTERNAL REVENUE ⟹28—EXCISE TAXATION—ACTIONS.

Excise taxes, under Act Aug. 5, 1909, differ from state ad valorem taxes, in that in the former the law itself imposes the specific tax, while in the latter there is no tax imposed until the officers act, and no suit for any tax will lie until after such action.

5. INTERNAL REVENUE ⟹28—CORPORATE EXCISE TAXES—ACTION.

Act Aug. 5, 1909, § 38, imposing on corporations an excise tax of 1 per cent. of their net income, to be determined by deducting from the gross income operating expenses and losses, including a reasonable allowance for depreciation of property, and requiring the corporation to make an annual sworn return, by subdivision 5 authorizes the Commissioner of Internal Revenue to amend a return, or make a return where none has been made, while subdivision 8 expressly extends and makes applicable to the tax all laws relating to the collection, remission, and refund of internal revenue taxes so far as applicable. Rev. St. § 3213 (Comp. St. 1916, § 5937), declares that taxes may be sued for and recovered in the name of the United States in any proper form of action. *Held* that, regardless of whether the failure to make a reassessment would preclude imposition of penalties, yet, as the act itself imposes the tax, an action may be maintained against a corporation for the 1 per cent. excise tax, based on items of income omitted, after the expiration of the period in which the Commissioner was authorized to amend the return.

6. INTERNAL REVENUE ⟹28—CORPORATE EXCISE TAXES—ACTION—DECLARATION.

A declaration in an action by the United States against a railroad corporation, which after alleging the filing of returns of net income by the corporation, averred that the returns were incorrect, because including deductions from gross income of alleged charges to expenses which were not necessary expenses, as well as charges to depreciation which were not reasonable allowances, and which were not charged against the capital valuation of the roadway on the railroad corporation's books, is a sufficient averment that the deductions were not authorized within Act Aug. 5, 1909, § 38, it being specifically alleged that the first deductions were not necessary expenses, and that the latter were not reason-

Digitized by Google

able allowances for depreciation; and hence the declaration is not subject to attack on the ground that the act did not require items claimed property depreciation to be charged against the capital valuation on the corporate books.

In Error to the District Court of the United States for the Middle District of Tennessee; Edward T. Sanford, Judge.

Action by the United States against the Nashville, Chattanooga & St. Louis Railway. A demurrer to the declaration was sustained, and the actions dismissed, and plaintiff brings error. Reversed and remanded, with directions.

Lee Douglas, U. S. Atty., and Marvin Campen, Asst. U. S. Atty., both of Nashville, Tenn., for the United States.

Claude Waller and Fitzgerald Hall, both of Nashville, Tenn., for defendant in error.

Before KNAPPEN and DENISON, Circuit Judges, and SESSIONS, District Judge.

KNAPPEN, Circuit Judge. In June, 1916, the United States, under the direction of its Commissioner of Internal Revenue, brought suit to recover from defendant an excise tax of 1 per cent., claimed to be due from it for each of the years 1909 and 1910, respectively, under section 38 of the Revenue Act of August 5, 1909 (36 Stat. 11, 112, c. 6). The declaration alleged the filing by defendant with the Commissioner of Internal Revenue on February 25, 1910, and February 21, 1911, of returns of its net income for the years 1909 and 1910, respectively; that both returns were incorrect as to the amount of defendant's income; that the return for 1909 was incorrect, in that it included, as an item of deduction from gross income, an alleged charge of $26,000 to expenses which was not a necessary expense actually paid out of income in the maintenance and operation of its business and properties; that the returns for both years were incorrect, in that they included charges to depreciation of roadway, amounting to $249,024.54 for the year 1909 and $239,229.70 for the year 1910, which were not charged against the capital valuation of the roadway on its books, and were not a reasonable allowance for depreciation of the roadway within the meaning of the act; that the three items named were disallowed by the Commissioner of Internal Revenue and held by him to be incorrectly charged, and that they were in fact not correct and proper deductions from gross income, and that the total amounts so deducted, which should have been included as net income in said returns, were for the year 1909 $275,024.54 and for 1910 $239,229.70; that the defendant was thus indebted to the United States, and subject to pay an excise tax of 1 per cent. upon the amounts stated; that it had failed and refused to make payment, and that the alleged taxes were thus due from defendant and payable by it to the United States.

The Revenue Act in question (section 38) makes every corporation to which it applies "subject to pay annually" a special excise tax of 1 per cent. on its net income, to be determined by deducting from gross income, among other things, operating expenses, losses sustained, "in-

Digitized by Google

cluding a reasonable allowance for depreciation of property," interest on indebtedness, and taxes. It requires from the corporation annual sworn returns covering the items of claimed deduction named, as well as others, with provision for further information, if no returns are made, or if those made are incorrect, with authority to the Commissioner (through his agent) to examine the corporation's books, and with authority (subdivision 5) to amend a return, or make a return where none has been made, and in the case of false or fraudulent reports, upon the discovery thereof, at any time within three years after the tax is due, to make a new assessment, accompanied by penalties for failure to make prompt payment, with further provision for criminal punishment in case of fraudulent returns, and for addition of 100 per cent. of the original tax in case of return made with false or fraudulent intent.

Defendant demurred to the declaration upon several grounds, which we thus summarize: (1) As to each of the three items in question—that the declaration fails to show that within three years from March 1, 1910, and March 1, 1911, respectively, the Commissioner disallowed the deductions so shown in its returns or held them to be incorrectly charged, or that the commissioner within such three years discovered any false, fraudulent, or erroneous returns, or that the Commissioner has made any return upon information or any assessment thereon, or any assessment against defendant of the amount sued for, and that without such assessment no recovery can be had; (2) as to the three classes of items—because no fact is averred tending to show that they were not necessary expenses of operation, actually paid out in the year in question, or reasonable allowances for depreciation, as the case may be, or that the deductions or allowances were not reasonable or legally made; (3) as to the items of alleged depreciation—because the Excise Act does not require that the items shall be charged against the capital valuation on defendant's books in order to justify its deduction from gross income in arriving at net income, but only requires that the amount so deducted shall be a reasonable allowance.

The trial judge sustained the grounds of demurrer which we have included in Nos. 1 and 2 above, and dismissed the suit without passing upon the remaining ground, resting his action upon the propositions that the Excise Act does not fix a specific charge of a sum certain to be paid without an assessment, and which can be collected as a debt owing to the United States, nor does it assess any definite tax, but merely subjects the corporation to the payment of a tax to be ascertained and assessed as specifically provided by the act; such assessment involving a determination of the amounts to be allowed as expenses of maintenance and operation, as well as reasonable allowance for depreciation of property; that no assessment can be made by the Commissioner, except upon a return by the corporation, or, in its default, by the Commissioner; that a reassessment, in case of an untrue return, can validly be made only within three years after the return is due by law; that such assessment is a legislative act, and cannot be performed by a court; and that, inasmuch as the declaration fails to show the making by the Commissioner of corrected returns of defendant's net income within three years after due, or the making of a

Digitized by Google

new assessment, upon corrected returns or otherwise, the United States is without remedy.

[1, 2] The declaration clearly seeks recovery of taxes on the ground that they are owing the United States by reason of untrue returns by the defendant with respect to expenses and depreciation. The word "false," when used in this connection in the statute, means "untrue" or "incorrect," and does not necessarily mean intentionally or fraudulently false. Eliot Nat. Bank v. Gill (D. C.) 210 Fed. 933, 939; Id., 218 Fed. 600, 602, 134 C. C. A. 358 (C. C. A. 1); National Bank v. Allen (C. C. A. 8) 223 Fed. 472, 478, 139 C. C. A. 20. It is the general rule, applicable, not only to customs duties, but to internal revenue taxes, that a common-law action of debt lies in favor of the government whenever, by accident, mistake, or fraud, no duties or short duties have been paid (Meredith v. United States, 13 Pet. 486, 493, 10 L. Ed. 258; Dollar Savings Bank v. United States, 19 Wall. 227, 22 L. Ed. 80; United States v. Tilden, 9 Ben. 368, Fed. Cas. No. 16,519; United States v. Chamberlin, 219 U. S. 250, 260, 31 Sup. Ct. 155, 55 L. Ed. 204); and thus that the government may recover a personal judgment for a tax, either in a sum certain or when readily reducible to certainty, whenever there exists a duty to pay, provided always another remedy has not been made exclusive (United States v. Chamberlin, supra, 219 U. S. at page 262, 31 Sup. Ct. 155, 55 L. Ed. 204; Stockwell v. United States, 13 Wall. 531, 542, et seq., 20 L. Ed. 491; and see Alaska Mining Co. v. Alaska [C. C. A. 9] 236 Fed. 64, 149 C. C. A. 274).

Assuming, then, for the moment, that the excise statute in question does not make the remedy by reassessment exclusive, the defendant's duty to pay lawful taxes omitted because of its default in making an untrue return, and the government's right to personal action therefor are obvious.

[3] The question of first importance thus is whether the statute makes the remedy by way of another assessment on the part of the Commissioner, exclusive of all other remedies. We approach the decision of this question, having in mind that the rule which denies the use of any but the statutory remedy has no application to the general government, unless clearly and specifically so declared. Dollar Savings Bank v. United States, 19 Wall. 227, 238, 239, 22 L. Ed. 80; United States v. Stevenson, 215 U. S. 190, 197, 30 Sup. Ct. 35, 54 L. Ed. 153; United States v. Chamberlin, supra, 219 U. S. at page 261, 31 Sup. Ct. 155, 55 L. Ed. 204.

[4, 5] The Excise Act in question does not expressly make such declaration, and the argument of necessary implication to that effect must reckon not only with the general principles we have referred to, but to the provision (section 38, subd. 8) which expressly extends and makes applicable to the tax in question "all laws relating to the collection, remission and refund of internal revenue taxes so far as applicable to and not inconsistent with the provisions of this section"; and the Internal Revenue Act then and now in force expressly declares that "taxes may be sued for and recovered in the name of the United States, in any proper form of action, before any Circuit or District Court of the United States for the district within which liability to

Digitized by Google

such tax is incurred, or where the party from whom such tax is due resides at the time of the commencement of the said action." Rev. St. § 3213, U. S. Comp. St. 1916, § 5937. The provision of the following section, requiring the sanction of the Commissioner to suits for taxes, was complied with in the instant case. We thus come to the question whether the provision just quoted is inconsistent with the assessment and administrative provisions of the act of 1909.

Upon careful consideration of the provisions of the act and the pertinent decisions, we are of opinion that there is no such inconsistency. The reassessment provisions, so far as requiring statement, are these:

By the fourth subdivision it is provided that:

> "Whenever evidence shall be produced before the Commissioner of Internal Revenue which in the opinion of the Commissioner justifies the belief that the return made by any corporation * * * is incorrect, * * * the Commissioner of Internal Revenue may require from the corporation * * * such further information * * * as he may deem expedient, * * * and for the purpose of ascertaining the correctness of such return * * * is hereby authorized * * * to examine any books and papers bearing upon the matters required to be included in the return of such corporation, * * * and upon the information so acquired the Commissioner of Internal Revenue may amend any return or make a return where none has been made."

By the fifth subdivision, to which we have already referred, the reassessment made by the Commissioner is required to be paid by the corporation immediately upon notification of its amount. There seems no room for doubt that, had actual reassessment been made by the Commissioner, to correct an untrue return discovered within the three-year period, personal action at law would lie in favor of the United States. The actual making of reassessment within three years has been held not necessary. National Bank v. Gill (D. C.) supra, 210 Fed. at page 940; Id., 218 Fed. at page 602, 134 C. C. A. 358.

But, assuming that administrative reassessment, including its incidents of possibly added penalties in substantial amounts and its summary method of enforcement (against which a corporation has no effective remedy save by suit to recover back), cannot be made after the three-year period, it by no means follows that the act intended to take from the government power to enforce the payment of a tax to which a corporation is subject, through judicial process and without addition of penalty, whereby the corporation is given full opportunity to be heard in its defense in advance of enforcement—merely because the untrue return was not discovered and corrected within the three-year period—especially in view of the express provision of subdivision 8 above quoted, the general policy of the law to promote, rather than to obstruct, the collection of public revenue, and the commonplace proposition that, in the absence of statute otherwise, time does not run against the government.

We think the adjudicated cases opposed to such construction. In Dollar Savings Bank v. United States, supra, the right of the government to maintain an action of debt for the recovery of certain taxes for several previous years which had not been returned or assessed as required by law, by reason of the Commissioner's construction of

Digitized by Google

the Revenue Act, as not making such taxes payable, was sustained as against a dissent by two members of the court on the ground that action would not lie for the tax unless first entered on the assessment roll. Express authority to sue was found in the statute we have already quoted as section 3213 of the Revised Statutes.

In United States v. Chamberlin, supra, the government sued for the amount of a stamp tax upon execution of conveyances under War Revenue Act June 13, 1898, c. 448 (30 Stat. 448–470), as amended by Act March 2, 1901, c. 806 (31 Stat. 941), which required the assessment levy, and collection of a percentage tax upon the "consideration *or value*" [1] of the property conveyed, and upon the claim by the government that the actual consideration for the conveyance *and the value of the lands* was a certain sum in excess of the consideration recited in the conveyance and upon which the payment by stamp was made. In sustaining the right of action it was said that the penalties provided by the act for its violation did not constitute the exclusive remedy of the government, and were "without application where, for any other reason, the tax has not been paid and thereby the government has lost its revenue" (219 U. S. 265, 31 Sup. Ct. 160 [55 L. Ed. 204]), and that an action for a personal judgment for the tax lies "whenever there is due a sum either certain or readily reduced to certainty" (219 U. S. 262, 263, 31 Sup. Ct. 159 [55 L. Ed. 204]). Here again express authority to sue at law was found in section 3213 of the Revised Statutes. See comment on this decision in Billings v. United States, 232 U. S. 261, at page 287, 34 Sup. Ct. 421, 58 L. Ed. 596, involving action for tonnage tax on foreign-built yachts, under section 37 of the Revenue Act here in question.

If these comprehensive decisions are not conclusive of the instant case, it can only be because the ascertainment of the taxes under consideration did not involve the exercise of judgment and administrative discretion, as is alleged to be the case here with respect to the allowance of items both of operating expense and depreciation—a subject to which we shall later refer.

In United States v. Tilden, 9 Ben. 368, Fed. Cas. No. 16,519, the government sued for collection of income taxes assessed under the act of July 1, 1862 (12 Stat. 473–475, c. 119), the joint resolution of July 4, 1864 (13 Stat. 417), the act of June 30, 1864 (13 Stat. 281–285), as amended by the acts of March 3, 1865 (13 Stat. 479–481, c. 78), July 13, 1866 (14 Stat. 137–140, c. 183), March 2, 1867 (14 Stat. 477–480, c. 169), and July 14, 1870 (16 Stat. 257–261, c. 255). As against some of the taxes it was urged that they were barred by the facts that a return had been made for the years in question, taxes assessed thereon and paid, and no imperfection discovered until some time later; as to others, that no return had been made, and the amount of the tax and the penalty, or only an amount of tax, had been assessed against and paid by defendant. Judge Blatchford (later Justice of the Supreme Court of the United States), in a carefully reasoned opinion, in which the Dollar Savings Bank and other pertinent cases were discussed, held that neither of the facts just stated barred the suit, and

[1] All italics in this opinion are ours.

Digitized by Google

that the United States had a right of action for the income tax without a prior assessment in the mode specified in the act creating the tax, using this language:

"The extent of the liability of the individual for income tax is defined by the statute, equally with the extent of the liability of the bank for the tax on undistributed earnings. In each case it is necessary, in an action of debt for the tax, to resort to sources of information outside of the statute, to ascertain the amount on which the per centum of tax fixed by the statute is to be calculated. In the case of the bank, its books and the testimony of its officers, and perhaps other means of information, may and must be resorted to. In the case of a suit for income tax, the books and accounts of the individual, and his testimony, and perhaps other means of information, may and must be resorted to. The difference between the two cases, in that respect, if there be any, will be, in every case, one of degree merely, not of principle. The statute, in imposing the per centum of tax on the income of the individual, makes a charge on him of a sum which is certain for the purposes of an action of debt, because it can be made certain through the action of a judicial tribunal, by following the rules laid down in the statute. That is the principle of the decision in the case of the bank, and it controls the present case."

In the Chamberlin Case, supra (219 U. S. 263, 264, 31 Sup. Ct. 155, 55 L. Ed. 204), this language of Judge Blatchford was quoted with complete approval. In one of the income tax statutes involved in the Tilden Case, provision was made for deducting from gross income, in ascertaining taxable income, "losses on sales of real estate purchased within the year for which income is estimated." In another of the acts, deduction was provided for of "all his losses actually sustained during the year arising from fires, floods, shipwreck, or incurred in trade, and debts ascertained to be worthless, but excluding all estimated depreciation of values."

In our opinion the cases cited are directly opposed to the proposition that an assessment by the Commissioner is a prerequisite to the right to sue. The declaration of the excise act, that every corporation subject to its terms "shall be subject to pay annually a special excise tax" there defined and described, as effectually denotes a duty to pay and a corresponding right of recovery by suit as do the words "there shall be levied, collected and paid" in the Customs Act of 1816 (considered in the Meredith Case, supra) and in the War Revenue Act of 1898 (considered in the Chamberlin Case).

We have not overlooked the argument that the ascertainment of the amount of net income, including items deductible for operating expenses, and for losses by property depreciation, involves questions of fact, to be determined upon testimony and inferences therefrom, as to which reasonable minds may well differ. But this does not make their determination exclusively a legislative, as distinguished from a judicial, act. What is a necessary expense of operation and what is a reasonable allowance for property depreciation are ultimately questions of fact, and of no different kind than those which courts are trying every day. The fact that their determination involves personal judgment does not make to the contrary; courts and juries are constantly deciding kindred questions of reasonable care, reasonable cause, reasonable delay, reasonable compensation, and reasonable disbursements, all of which involve the personal judgment

Digitized by Google

of the triers. Such questions are essentially judicial; so far as they involve legal questions, they are absolutely so. Indeed in the normal suit to recover back taxes, paid under protest, questions of fact concerning the propriety and amount of the assessment not infrequently are litigated, and of a nature nowise different from those involved here. Whatever differences there may be between deciding questions of "necessary operating expenses" and "reasonable allowance for depreciation," on the one hand, and, on the other, the value of the land conveyed in a suit for the stamp tax "or losses on real estate purchased" and "losses incurred in trade" in an income tax suit are "of degree merely, not of principle." As said in the Tilden Case, supra, 9 Ben. at page 391, Fed. Cas. No. 16,519:

"Whether the tax be one on income, or on undistributed earnings of a bank added to its contingent fund, or on a legacy or a succession, or on any other subject of tax, where a tax of a fixed percentage is imposed by the statute on a subject or object which is so definitely described in the statute that its amount or value, on which the fixed per centum is to be calculated, can be ascertained and determined, on evidence, by a court, a suit for the tax will lie, without an assessment."

The excise tax system in question differs radically in principle from state ad valorem taxation systems. "There no tax is imposed until the officers act, and no suit for any tax will lie until after such action by the officers." Tilden Case, 9 Ben. 391, Fed. Cas. No. 16,519. Here the law itself imposes the specific tax.

Had there been true return, and an assessment based thereon, it may be assumed that no right of action would accrue to the government to recover an additional amount because of an original error on the part of the Commissioner, or his subsequent change of mind as to the propriety of the amount assessed. But such case is fundamentally distinguished from the case we have here, in which, under the averments in the declaration, the defendant was, as matter of law, liable to a tax in excess of that presumably paid by precisely the amount of the statutory tax on the items erroneously returned by way of deduction.

We think it clear that one who, through erroneous return, has made it impossible for the Commissioner to exercise his judgment upon the items affected thereby cannot be heard to object that the only remedy open to the government is invoked. Indeed, the declaration avers that the Commissioner has "disallowed" the deduction of the items in question, and the natural inference therefrom is that, so far as he can, he has held the defendant liable for the excise tax thereon. It results from these views that the learned district judge was in error in holding that this suit was barred by the Commissioner's failure to reassess. The conclusion we have arrived at has been reached in two cases in district courts: United States v. Threshing Co. (D. C.) 229 Fed. 1019; United States v. Grand Rapids & Indiana Ry. Co. (D. C.) 239 Fed. 153.

[6] As to the criticism that the declaration avers no fact tending to show that the expenses alleged to have been erroneously returned were not necessary expenses, or that the claimed amounts of deduction for depreciation are not reasonable allowances, we need only

Digitized by Google

say that erroneous or untrue return of the operating expenses and deductions for depreciation is sufficiently averred, and that evidence sustaining the allegations of incorrectness need not be set out.

Of the criticism that the act does not require that items of claimed property depreciation be charged against the capital valuation on defendant's books, it is enough to say that the declaration expressly avers that the alleged deductions were not reasonable allowances for depreciation, within the meaning of the act. If more definite or detailed information is needed to enable defendant to plead or prepare for trial, relief by bill of particulars or otherwise is obvious.

The judgment of the District Court is reversed, and the record remanded to that court, with directions to take further proceedings not inconsistent with this opinion.

(249 Fed. 686)

EDWARDS v. UNITED STATES.

(Circuit Court of Appeals, Sixth Circuit. April 2, 1918.)

No. 3065.

1. POST OFFICE ⟹35—OFFENSES—"USE OF MAILS TO DEFRAUD."

Where defendant, who made a compound to be fraudulently sold under the name of a rare and high-priced drug, used the mails for the purpose of ordering his materials, such use of the mails falls within Criminal Code (Act March 4, 1909, c. 321) § 215, 35 Stat. 1130 (Comp. St. 1916, § 10385), denouncing the offense of using the mails in connection with a scheme to defraud.

[Ed. Note.—For other definitions, see Words and Phrases, Second Series, Fraudulent Use of the Mails.]

2. POST OFFICE ⟹49—OFFENSES—SCHEMES TO DEFRAUD.

In a prosecution under Criminal Code, § 215, for using the mails in connection with a scheme to defraud, where defendant sold a compound of common drugs as acetyl salicylic acid under labels indicating that it was made in Germany, and drugs of that class, which had become rare, were commonly made there, and there was a belief that German origin was important as tending to insure the quality and therapeutic value of such drugs, the jury might consider the false labels on the question whether defendant intended to defraud, for if it is intended to bring about a sale by misrepresenting the quality or identity of an article in a particular which would be likely to have a persuasive effect on the purchaser's mind this may be a sufficient defrauding.

3. CRIMINAL LAW ⟹814(5)—TRIAL—INSTRUCTIONS—OTHER OFFENSES.

In a prosecution for using mails in connection with a scheme to defraud, whereby defendant sold as acetyl salicylic acid a compound containing acetanilid, without labeling it as required by Pure Food and Drug Act June 30, 1906, c. 3915, 34 Stat. 768 (Comp. St. 1916, §§ 8717-8728), an instruction allowing the jury to consider that fact, although, as the sales were intrastate, the act had no application, was proper on the question of intent to defraud, and not erroneous as allowing the jury to consider another offense.

4. CRIMINAL LAW ⟹371(1)—EVIDENCE—OTHER OFFENSES—INTENT.

Where the question involved is the defendant's intent, evidence of an act having a direct bearing on the intent is admissible, though the act be a separate offense.

⟹For other cases see same topic & KEY-NUMBER in all Key-Numbered Digests & Indexes

Digitized by Google

In Error to the District Court of the United States for the Eastern Division of the Northern District of Ohio; John M. Killits, Judge.

Herbert E. Edwards was convicted of using the mails to defraud in violation of Criminal Code, § 215, and he brings error. Affirmed.

Gage, Day, Wilkin & Wachner, of Cleveland, Ohio (Luther Day, of Cleveland, Ohio, of counsel), for plaintiff in error.

Edwin S. Wertz, U. S. Atty., and F. B. Kavanaugh, Asst. U. S. Atty., both of Cleveland, Ohio.

Before WARRINGTON, KNAPPEN, and DENISON, Circuit Judges.

DENISON, Circuit Judge. Plaintiff in error (hereafter called defendant) was convicted for using the mails to defraud, in violation of section 215 of the Criminal Code. Stating only so much of the alleged scheme as pertained to one of its several branches, it was this: Defendant was a physician, doing business, also, as a manufacturing chemist. The drug, acetyl salicylic acid, which had been manufactured in Germany, had become rare and high priced. Defendant made a compound from other comparatively cheap drugs (one of which was acetanilid), which compound he labeled and sold under the name "acetyl salicylic acid," and, although he made it in Cleveland, he caused the labels to say that it was manufactured by a fictitious firm in Germany. He did not sell this through the mails, nor, so far as appears, in interstate commerce; but the genuine and common drugs which he used in its composition he procured by means of a written order therefor sent through the mails to manufacturing chemists in Philadelphia. Upon the sending of this letter rests the supposed violation of section 215.

What may be called defendant's meritorious defense was his claim that acetyl salicylic acid was not compounded by any standard formula, and that his product was, in fact, acetyl salicylic acid and had all its therapeutic effects—or, at least, that defendant, in good faith and reasonably so believed and had no intent to deceive. This defense was tried at length, was submitted to a jury under a charge to which (on this subject) there was no exception, and was found to be untrue. Upon this writ of error, the defendant's complaints are three:

[1] 1. It is said that such a letter as was here sent was not material "for the purpose of executing such scheme or artifice or attempting so to do." It is, in substance, urged that the statute contemplated only using the mails in the course of the final carrying out of a scheme which is ready for that execution by which the fraud is to be consummated. It may be that the words selected and placed in the statute were capable of this comparatively narrow construction; but the settled course of decisions makes it now too late to consider this question as if it were open. This court has twice recently upheld convictions under facts not to be, in principle, distinguished from those here present, where the charge is one of a fraudulent scheme to manufacture and sell a spurious compound, and where the

Digitized by Google

use of the mails was in procuring the innocent raw materials for effectuating this scheme. In U. S. v. Goldman, 220 Fed. 57, 135 C. C. A. 625, it appeared that the mails were used, by way of an advertisement, to find some one who might be persuaded to become a confederate in the fraud—the scheme being one such that a confederate with the qualities sought by the advertisement was an essential element in carrying out the plan which the defendant had then completely devised. In Shea v. U. S., 236 Fed. 97, 149 C. C. A. 307, the mails had been used in circulating an advertisement seeking a victim who might be defrauded through the operation of a scheme which the defendants had then formed in a general way, but which was doubtless subject to whatever changes the situation might dictate. The drugs which the defendant ordered in this case were free from fraud, the transaction, considered by itself, was an ordinary purchase and sale, and the defendant might have used them for a perfectly rightful purpose; the woman who answered the advertisement in the Goldman Case might have been free from any wrong intent, and might have been rejected by Goldman and never taken into his plan; those who answered the advertisement in the Shea Case would naturally have been free from any fault but might have been unsuitable material and might have received no further attention from Shea; in each case, the scheme was not ready for its final execution; but in each case, the scheme had been formed and laid out by the defendant along the main and general lines which would be followed, and in each case the materials were used in aid of getting ready for the final execution. If the view of the statute which brings such a procuring of materials within its prohibition might be thought too broad, the construction is one to which we are fully committed.

[2] 2. The court was requested to charge that if the defendant honestly believed that his product was rightly called acetyl salicylic acid, then the fact that he intended to sell it under labels indicating that it was made by a fictitious firm in Germany, would not constitute a plan and scheme to defraud within the meaning of section 215. The court denied this request but charged:

"The court says to this jury, if it did not say it before, that you have the right to go to the use of these false names, these made-up names, these fictitious names on these labels, for the purpose of getting an index of the defendant's mind and intent. That is a part of the charge in this case. And if this charge were nothing more than a charge that the scheme was that the defendant would invent the names of fictitious corporations of domestic and foreign location, and by the use of those names upon labels otherwise false, induce people to buy goods otherwise than those they were expecting to get, this charge would be broad enough to be a scheme to defraud within the view of section 215. That much of the scheme is in this charge."

We are unable to say that there was prejudicial error in this charge. We do not mean that the statutory scheme to defraud is necessarily to be found in every false statement of origin or even that it always may be there found; but this charge and refusal must be considered on the facts here involved. It is not denied that drugs of this class had been commonly made in Germany, and that there was a common belief that the German origin was important as tending to insure the

Digitized by Google

quality and therapeutic value of the drugs. Under these conditions, the claim of German origin might well be the controlling consideration in bringing about a sale; and that defendant believed it would be a material inducement is evident from its adoption by him. It is now well settled that whether the purchaser gets something "equally as good" and whether he gets an article actually worth the full price he paid are not controlling. If it is intended to bring about a sale by misrepresenting the quality or identity of the article in particulars which would be likely to have a persuasive effect upon the purchaser's mind, this may be a sufficient defrauding. Sparks v. U. S. (C. C. A. 6) 241 Fed. 777, 782, 154 C. C. A. 479; Harrison v. U. S. (C. C. A. 6) 200 Fed. 662, 665, 119 C. C. A. 78.

In Horman v. U. S., 116 Fed. 350, 53 C. C. A. 570, this court held that "to defraud" and "to injure" were largely equivalent terms; and based upon this holding. it is now urged that where there is no intent to accomplish final pecuniary injury, there can be no intent to defraud; but this does not follow. In that case, the court was holding that the words "to defraud" may reach an injury by force or intimidation as well as an injury by trickery; but we think there was no purpose to hold that there must necessarily be an intent to get another's money without giving value for it; an intent to get it by misleading the owner in any particular that affects his completely intelligent consent may be sufficient. See Bettman v. U. S. (C. C. A. 6) 224 Fed. 819, 140 C. C. A. 265.

[**3, 4**] 3. The court charged the jury that the Pure Food and Drug Act (Act June 30, 1906, § 8 [Comp. St. 1916, § 8724]) required that any compound containing acetanilid should be labeled to show this fact, and that, if not so labeled, it was misbranded and a violation of that act; and further charged:

"* * * This Food and Drug Act was a statute of great notoriety. The defendant says that when he engaged in these transactions he did not know of its existence. He is entitled to so testify before you and have you consider his testimony in that particular. In determining whether or not you should believe him in this particular, you have a right to look at him as he says he was, his business and his relation to the subject-matter of this particular act; you have a right to consider whether he should not have known the existence of this act, and whether or not he did not, when putting out these packages, if you find that any one of these was mislabeled or misbranded—whether or not he did not violate, intentionally, this law. It is true that he is not here under prosecution for misbranding, for violating the Food and Drug Act. This is not the prosecution. He is here under a charge of violating another law of the United States. But you have a right, in determining the character of his transactions, to consider the relation which this notorious law bore to his operations out of which, and because of which this charge comes. It is my duty to say to you that if you believe him when he said that, then you ought not to hold against him the fact that he violated the act, if he did violate the act, but in considering whether or not you should believe him when he made that statement, you must look to the fact which he has brought to your attention himself that he was a druggist, a chemist and a physician of long standing, whose daily business brought him in direct relation with the subject-matter of that act."

Complaint is made of this charge because:

"The jury is instructed that if they believe the defendant violated the Food and Drug Act, they can hold this fact against him in determining the

Digitized by Google

issue as to whether or not he is guilty of committing an altogether separate and distinct crime—using the mails to defraud."

This complaint has superficial force, but when all the charge on this subject is considered in its relation to the atmosphere of the case, we do not think it should be interpreted as a charge that guilt of one crime is evidence of guilt of another. The Pure Food and Drug Act relates, in the end, to interstate commerce, and there can be no violation of the act unless the food or drug is intended to be put in that commerce. It was not claimed that defendant had sold his articles in interstate commerce, but for the purposes of this trial it was practically conceded that he had not, and so it was conceded that he was not guilty of any offense punishable by that statute. It is, therefore, not to be supposed that when the trial judge referred to "violating" the Pure Food and Drug Act, he was intending to speak of punishable guilt under that act, or that the jury so understood him. The circumstances indicate a much more reasonable and probable meaning. This act was generally familiar to druggists and physicians the country over—the final customers whom defendant intended to reach; they commonly understood that, because of the general enforcement and observance of this act, any compound containing acetanilid would disclose that fact on the label, and they would naturally believe that if a compound offered for sale was not thus labeled, they could safely use it in cases where acetanilid would be dangerous; if defendant knew of this regulation, and hence knew of the effect it certainly had upon the purchasing trade, he would know that his conduct in omitting any mention of acetanilid from his label would inevitably deceive and defraud the ultimate customers for his article. The vital question to be determined by the jury was whether defendant actually intended such fraud and deceit by putting out his article as acetyl salicylic acid of German manufacture; and the part of the charge now under review was in substance only an instruction that, in determining whether his intent was fraudulent or honest, they could consider the fact, if they found it to be a fact, that in the very same transaction he was intending to deceive and defraud the same people in another particular. Viewed in this way, the charge was not objectionable, and was well within the settled rule which permits even complete guilt of another offense to be shown where the question involved is the defendant's intent, and where the other act has a direct bearing on that intent. See the cases upon this subject reviewed and compared in Shea v. U. S., supra, 236 Fed. 102, 149 C. C. A. 307.

The judgment must be affirmed.

Digitized by Google

(249 Fed. 601)

ULMAN v. MANHEIMER.

(Circuit Court of Appeals, Sixth Circuit. April 2, 1918.)

No. 3081.

1. CONTRACTS ⟹182(1)—CONSTRUCTION—JOINT OR SEVERAL LIABILITY.

An agreement between liquor salesmen and a corporation entered into when the salesmen became stockholders whereby each agreed to assume one-half of the loss which might be sustained on accounts transferred to the corporation for merchandise shipped to the respective customers of each, must be deemed several instead of joint and not to render each salesman liable for losses on account of sales made by his associate, for otherwise no effect would be given to the word "respective," this being true regardless of the previous practice between the parties whereby the two salesmen and another who had formed an association each guaranteed to make good any loss of profits credited to the association on account of sales made by any of its members.

2. CORPORATIONS ⟹123(16)—PLEDGE OF STOCK—GENERAL VERDICT—SPECIAL FINDINGS.

In a suit to recover a surplus after a sale of corporate stock alleged to have been held as security, where there was a general verdict for plaintiff, but certain dividends claimed were denied, the denial of the dividends cannot be deemed a special finding inconsistent with the general verdict where it was doubtful whether defendant ever received such dividends and it appeared, though not from the bill of exceptions, that plaintiff's counsel after argument, attempted to withdraw the claim to dividends.

3. TRIAL ⟹258(1)—INSTRUCTIONS—REQUEST.

Where in an action on a contract defendant relied on the practical construction by the parties as well as a new and independent agreement, the refusal of an instruction submitting both theories of defense, but which the court treated as dealing solely with the practical construction, on which issue he had already charged the jury, cannot be deemed error where its double aspect was not appropriately called to the court's attention.

In Error to the District Court of the United States for the Western Division of the Southern District of Ohio; John E. Sater, Judge.

Action by Leo Manheimer against Adolph Ulman. Judgment for plaintiff, and defendant brings error. Affirmed.

In the court below, Manheimer, as plaintiff, filed a petition showing the necessary diverse citizenship to give jurisdiction, and further alleging that on April 10, 1911, he was directly indebted to Ulman, defendant in the action, in the sum of about $2,500, and was also indebted upon a guaranty in the sum of about $1,300; that defendant held, as collateral security for such debts, plaintiff's stock in the Ulman Company, a corporation; that in foreclosure of the collateral security, the defendant sold the stock and realized from it and from dividends about $8,700; that thereupon there became due to plaintiff the difference, about $4,900, for the recovery of which the action was brought. Upon the trial before a jury, plaintiff withdrew his claim as to dividends and recovered a judgment for the remainder of his demand, being, with interest to the date of the judgment, about $5,500. Upon a writ of error, the defendant below brings up a record containing the substance of all the testimony and disclosing a history of the transaction, an outline of which is sufficient for present statement. Some of the questions of fact must have more detailed statement hereafter.

Ulman & Co., prior to January 1, 1907, was a partnership engaged in selling liquors at wholesale. On that date the partnership became a corpora-

Digitized by Google

tion, under the same name and continuing the same business. In July, 1904, Manheimer was a traveling salesman, selling to the retail trade in liquors, and having regular customers, so that he had a certain degree of established business. Goodman was another salesman in a similar situation; so was Ehrlich. These three (and another for part of the time involved), in July, 1904, formed an association analogous to a partnership. They will be here designated as the associates, or as Goodman & Co. At about the time last named, the associates made an oral contract with Ulman & Co., the partnership, by which the associates were to have the exclusive right to sell the Ulman goods in certain territory. Ulman & Co.'s net profit on such goods was to be computed by deducting from the selling price the cost, the expenses of sale, losses, etc., and these net profits were to be divided, one-half to Ulman & Co., in compensation for their part in carrying on the enterprise, and one-half to the associates in compensation for their personal services; but the profits to which Goodman & Co. were entitled were contingent upon the actual receipt by Ulman & Co. of payment for goods sold. The method of bookkeeping by Ulman & Co., followed up until January, 1907, without objection, and which we assume was known, in substance if not in form, to the associates, was this: A memorandum ledger account was kept with Goodman & Co. To this was credited one-half the gross profits made upon each sale by any associate. Against it were charged one-half the expense of the sales, one-half the discounts, and one-half of any loss upon any sale made by any associate whenever the transaction had reached the stage where it was to be entered upon the books as a loss. There were also charged against it all sums paid to the associates on account of their indicated profit. There can be no doubt that if, through a loss upon an account which had been considered good, it had developed that the associates had been overpaid and had received money which turned out not to be profits, there would have been a liability to repay this excess, or, what is the same thing, to deduct it from the next profits which would otherwise have become payable; but there was not, by the associates, any guaranty whatever that the accounts made by them would prove collectible or would be paid. There was a written contract between the associates regarding the disposition of these profits, which provided in substance that the profits should constitute a fund out of which each of the associates should be paid a specified salary, and that the balance of the net profits should be divided in equal shares among the associates. For the purposes of this case, we may accept the defendant's theory that the liability of the associates to return to Ulman & Co. any overpayment—the only liability there was—was joint and not several. From accounts kept in this fashion, it appeared, on January 1, 1907, that plaintiff's share of the accumulated undistributed profits, on the theory that all accounts were good, was $3,153, and in making closing bookkeeping entries at the end of 1906, Ulman & Co. carried this amount to plaintiff's credit on his personal account on their books. He also there had prior credits more or less directly the result of previous distributions or payments of his share of the profits, so that his total credits on this account were about $7,500. Goodman, one of the other associates, was similarly situated, but with different amounts of credit.

All parties desiring that Goodman and plaintiff should be stockholders in the corporation, the Ulman Company, into which the partnership, Ulman & Co., was being transformed, it was agreed that plaintiff should purchase at par $10,000 of the stock from Ulman, who seems to have been acting in some measure for the corporation. Plaintiff paid for this by transferring to Ulman the $7,500 credit on the partnership books and by giving Ulman his notes for $2,500. Goodman made a similar arrangement. The notes contained a pledge of the stock as security for the payment of the notes. The transaction was completed by the execution of the contract of guaranty given in the margin signed by Goodman and by plaintiff.[1] The parties thereto, Ulman and

[1] "Whereas, each of the undersigned * * * for a valuable consideration duly received is answerable to and now agrees to make good to the Ullman

Digitized by Google

Strauss, composed the former partnership. All the assets of the partnership were transferred to the corporation and all the outstanding accounts made by the associates were taken over by the corporation as assets at their sum as carried on the partnership books. Plaintiff made some payments to Ulman upon his notes. Some small losses developed upon accounts which had been thus transferred, and on the corporation books one-third of the loss was charged to plaintiff's private account (plaintiff says, without his knowledge). In 1909, it was ascertained that a very large loss, involving, not only profits, but the whole selling price, had occurred upon the account of the South Carolina Dispensary. This sale had been made by Goodman, who had the Southern territory, while plaintiff's territory had been in Colorado and the West. The corporation charged one-third of this loss to plaintiff's private account, and, when plaintiff disputed liability, defendant sold his stock under the pledge, realizing $8,100. The matter in dispute was whether, under the contract of January 10, 1907, plaintiff was liable for losses upon accounts for goods sold by any of the associates before January 1, 1907, or was liable only for losses upon the accounts which he had made in his Western territory. Upon the latter theory, plaintiff was entitled to the verdict which he recovered (unless for one subordinate question); upon the former theory, his liability was greater than the entire proceeds of the stock sold.

Simeon M. Johnson, of Cincinnati, Ohio, for plaintiff in error.

Dolle, Taylor, O'Donnell & Geisler and Jas. B. O'Donnell, all of Cincinnati, Ohio, for defendant in error.

Before WARRINGTON, KNAPPEN, and DENISON, Circuit Judges.

DENISON, Circuit Judge (after stating the facts as above). [1] When we read the contract of January 10, 1907, in connection with the admitted circumstances, we think it must be construed according to plaintiff's theory. There are considerations tending in the opposite direction, but, upon the whole, they are overbalanced. Chief among these is the fact that through this construction Manheimer finally realizes the $3,153, and perhaps further sums, contingently credited to him, but which, as events happened, he would not have been entitled to if the old arrangement had continued unchanged. Assuming, as is entirely clear, that, under the old arrangement, this credit to plaintiff of $3,153 would have been rightfully canceled when the South Carolina loss occurred, its cancellation would still seem to be rightful if the extent and character of the plaintiff's liability had remained un-

---

Company, an Ohio corporation, one-half of any loss, which may be sustained by said company on any of the accounts transferred to it for merchandise shipped by Ulman Company to our respective customers. * * *

"Whereas, each of the undersigned * * * has deposited with the said Adolph Ulman as trustee for the Ulman Company the respective shares of stock owned by each in the Ulman Company, as security for the performance by each of his agreement aforesaid with the right in said trustee to sell said stock on such terms at such time, in such manner and on such notice to us as to him may seem best, to make good any of said loss for which we are respectively liable whenever the same may be sustained.

"Now, therefore, in consideration of the premises and one ($1) dollar paid to each of us by the said Adolph Ulman, trustee as aforesaid, we each severally agree to and with the said Adolph Ulman, trustee as aforesaid, that he shall retain said stock in his possession as said trustee until it is finally ascertained to his satisfaction that no loss will be sustained by the Ulman Company on the accounts aforesaid. * * *"

Digitized by Google

changed. In other words, under the old arrangement, Manheimer would have been subject to lose this sum through the failure of one of Goodman's sales; plaintiff's then liability was, to that extent, joint and not separate; and it would be natural to think that plaintiff's liability under the new contract would be of the same joint character. However, we find that the extent of his liability was very materially changed. It was increased perhaps many fold. It had extended only to the associates' one-half of the profits made by the Ulman partnership upon a sale; but these accounts were being taken over by the corporation at their face value in payment of its capital stock. The old association relations were ending; they were assuming new relations to each other and to the corporation; and it was not out of place for the corporation to require, as it did, a guaranty of payment or against any loss on these accounts. Plaintiff might have been very willing to continue his agreement to give back profits that had come from a sale by any of the associates; it was a very different thing to ask him to guarantee the accounts. He would be familiar with the facts attending his own sales and with the pecuniary condition of his own customers in the Western territory. He would know nothing about those in the Southern territory, except what Goodman might have told him. It would be natural and probable that he should be willing to give a positive guaranty as to his own customers in exchange for the surrender of his liability to repay profits which he had received from Goodman's sales. It would be unnatural and improbable that for the same consideration he should be willing to guarantee Goodman's sales. The language of the contract is consistent with this interpretation. It had been well understood that each of the associates had his own customers in his own territory; the agreement is signed by two of the associates, plaintiff and Goodman; and it says that:

"Each of the undersigned * * * agrees to make good to the Ulman Company * * * one-half of any loss which may be sustained by said company on any of the accounts transferred to it for merchandise shipped by Ulman Company to our respective customers."

And again:

"Each of the undersigned * * * has deposited * * * the respective shares of stock owned by each * * * as security for the performance by each of his agreement * * * to make good any of said losses for which we are respectively liable."

Not only does the use of the word "respective" and "respectively" import the idea that each associate was contracting only with reference to the losses connected with his own customers; but, unless this is the meaning of the contract, there is no satisfactory force in the words "each of the undersigned."

It is argued that this language was adopted so as to make the contract liability several as well as joint; but this conclusion presupposes that otherwise existing merely joint liability which the word "respective" negatives. When several individuals are to share in a liability of which each has created a part, and it is desired that all should be liable, and that each should be liable for the whole, it is the customary

Digitized by Google

language of the law to declare that they are jointly and severally liable. When a skilled draftsman, acting for the party to which the obligation was owing, departed from this familiar formula and said, "Each of us agrees to be liable for our respective shares," we think the conclusion inevitable that the liabilities were fractional, and not unitary. Otherwise, the word "respective" becomes not merely surplusage, but contradictory. For definitions and constructions of "respective" or "respectively," see Alsop v. Russell, 38 Conn. 99, 103; Wolf v. Lake Erie Co., 55 Ohio St. 517, 45 N. E. 708, 36 L. R. A. 812; Messer v. Jones, 88 Me. 349, 34 Atl. 177; Patrick v. Royle, 13 Q. B. 98, 112.

We may concede that if these words were to be considered by themselves, without knowing the situation to which they were applied, there might be enough of ambiguity, so that the construction we have adopted would be compelled to yield to the effect of a practical construction by the parties; but the trial court took the view that there was such an ambiguity, and submitted to the jury the effect of the practical construction which defendant alleged and plaintiff denied, and the verdict of the jury has the effect of a finding that the plaintiff was right in his denial. The subject of interpretation through practical construction is therefore eliminated from the case; and when we hold, as we do, that as matter of law the liability was distributive, and not in gross, all the error alleged on the subject of evidence to explain or interpret becomes immaterial.

We find no prejudicial variance between the contract of guaranty of payment made with the corporation, as alleged in the petition, and the contract of guaranty against loss made with Ulman, as shown by the proofs. Ulman was, in this respect, a trustee for the corporation. There was only this one written contract between the parties, and the defendant was never misled or prejudiced in the least.

[2] It is plain enough from the figures that the jury allowed all of plaintiff's claims described in the petition, except for the dividend which it was said belonged to plaintiff and had been received by defendant, and that this claim for dividend was rejected. Defendant now argues that the action of the jury in accepting defendant's position about the dividend was, in effect, a special finding, inconsistent with the general verdict. This claim would require examination, were it not for the fact, alleged by counsel and not disputed, that in the final argument to the jury, and after the judge had charged upon the subject of this dividend, plaintiff's counsel became doubtful of the sufficiency of the proof to show that the defendant had ever in fact received it, and so withdrew the item from the jury. This occurrence is not a part of the record of the trial, as fixed by the bill of exceptions; but it is enough to say that the rejection of the item by the jury may have been because of this or for some similar reason, and so is not necessarily inconsistent with the general verdict rendered.

[3] By an amendment to the answer, defendant claimed that, even if the written contract of January 10, 1907, was only that plaintiff would make good losses on the accounts of his own customers, yet that the next year, when the dividend on his stock became payable from the corporation to plaintiff, and when, by the terms of the

Digitized by Google

pledge, defendant had the right to take this dividend and apply it on the notes due him, plaintiff, in consideration of defendant abandoning that right, orally agreed to assume liability for all the customers' accounts, Goodman's as well as his own, and to allow the dividend to be applied by the corporation upon that joint liability. During the trial, there was some evidence tending to support this answer; but that distinct issue received little attention. At the end of the trial, defendant submitted a series of special requests, No. 2 of which was:

"If the jury should find that the parties to the writing of January 10, 1907, sued on in the within action, have themselves construed the writing as not the contract between them, but subsequently entered into an agreement, whether verbally or by conduct, different from that set forth in the contract, then I charge you will adopt and give effect to the later agreement."

This was refused. If it had distinctly presented the issue raised by the amended anwer; there would be force in the contention that the refusal was error, though it is not clear how this new oral agreement would have escaped the statute of frauds. However, it is not certain that the request was aimed at this defense. The same acts and words relied on to show the new contract were relied on also to show the practical construction of the old; both the testimony and the second request had this double aspect; the court seemed to regard this request as directed to the subject of practical construction and charged fully upon that subject; and neither by exception nor by a further request was the trial court advised that this request was intended to present specifically the defense of a new and independent contract. We conclude that fairness to the trial court requires that a point of this kind should be clearly and distinctly brought to his attention, and that error cannot be predicated solely upon the refusal of a request which covers up as much as it discloses of the contention afterwards made.

The judgment is affirmed.

(249 Fed. 696)

WEGE v. SAFE-CABINET CO.

(Circuit Court of Appeals, Sixth Circuit. April 3, 1918.)

No. 2982.

1. CONTRACTS ⟹152—CONSTRUCTION—LANGUAGE.
   The language of a contract itself must control, unless the parties themselves have placed a practical construction upon it to the contrary.
2. MASTER AND SERVANT ⟹62—INVENTIONS OF SERVANT—AGREEMENTS TO ASSIGN—CONSTRUCTION OF PATENT.
   A patent for a sheet metal safe or cabinet, issued to defendant, *held* one for an improvement in the safe cabinet art, and within the terms of a contract requiring defendant to treat as the property of his employer all his improvements in a safe-cabinet and his inventions embodying any principles of safe-cabinet construction.
3. SPECIFIC PERFORMANCE ⟹71—CONTRACTS—PATENTS.
   When couched in unambiguous terms, a contract obligating an inventor to treat all inventions and patents applicable to a particular art as the property of his employer is specifically enforceable.

⟹For other cases see same topic & KEY-NUMBER in all Key-Numbered Digests & Indexes

Digitized by Google

4. CONTRACTS ⟹108(2)—VALIDITY—PUBLIC POLICY.
Where defendant agreed that any patents for improvements or inventions which he might secure in a particular art should belong to his employer, such contract, though applying to a patent for an improvement in the art secured after defendant terminated his employment, is not invalid, as opposed to public policy, for, if the contract was limited to patents secured during the term of service, defendant might well evade its provisions.

5. MASTER AND SERVANT ⟹62—INVENTIONS OF SERVANT—ASSIGNMENT.
Where the contract between defendant and his employer, requiring him to act as superintendent of the employer's manufacturing business, provided that any patents for improvement and inventions in the article manufactured should become the property of the employer, defendant is impliedly bound to assign such patents.

6. APPEAL AND ERROR ⟹1079—BRIEFS—WAIVER OF ERROR.
Where nothing more than the bare assignment of error is set forth in the brief, the error must be deemed waived.

Appeal from the District Court of the United States for the Southern Division of the Western District of Michigan; Clarence W. Sessions, Judge.

Bill by the Safe-Cabinet Company against Peter M. Wege. From a decree for complainant, defendant appeals. Affirmed.

Fred Chappell and Otis A. Earl, both of Kalamazoo, Mich., for appellant.

F. D. Campau, of Grand Rapids, Mich., T. J. Summers, of Marietta, Ohio, and James L. Steuart, of New York City, for appellee.

Before WARRINGTON and KNAPPEN, Circuit Judges, and McCALL, District Judge.

WARRINGTON, Circuit Judge. This is an appeal from a decree requiring Wege to assign certain letters patent and all his rights thereunder, including all claims for past infringements of the patent, to the Safe-Cabinet Company. Wege and the company entered into a written contract on August 7, 1909, whereby Wege was engaged as superintendent of the company upon a salary schedule fixing his compensation according to the amount of business which the company might transact in a series of years, commencing with a minimum salary of $3,000, and running to a maximum of $5,000. On September 8th following they entered into another written contract, which required the company to issue to Wege 50 shares, of $100 each, of its fully paid common stock, and Wege to render services to the company in substance embracing (a) "all present and future mechanical improvements of the safe-cabinet," and (b) "all developments and inventions embodying any or all the principles involved in the safe-cabinet construction, due in part or altogether to" Wege's "talent and labor," and, when made the subjects of United States patents, such patents "and what they may lawfully include" were to be the property of the company. A second clause of this contract reserves to Wege "full property rights in all patents secured by him for inventions in steel or other construction, except as above stated, which are due to his talent and labor, except as may be modified by mutual agreement hereafter,"

Digitized by Google

and as to patents so secured by Wege and not covered by the first clause the parties were to agree upon their purchase or use by the company; Wege agreeing to offer such excepted patents to the company "before undertaking to market any of them elsewhere."

March 25, 1910, the parties made another contract in writing supplemental to and without intending to modify the previous contracts of August 7 and September 8, 1909. By the first clause the company agreed to retain Wege as its superintendent of construction for five years from February 1, 1910, under his "guaranteed salary contract" of August 7, 1909, with the understanding, however, that he should "give his undivided time and service" to the company and to its satisfaction. By the second clause of the contract, and as an additional compensation for his service and for his "inventions and patents on the safe-cabinet construction proper (all of which by previous existing contracts are and shall be the absolute property of said company)," the company agreed to pay Wege 2 per cent., payable quarterly, of all its business in safe-cabinet construction during the life of "any and all safe-cabinet construction patents," or so long as he should remain or be willing to remain in the company's employ, "irrespective of the time period of five years named herein."

November 3, 1911, the parties made another supplemental contract in writing, by which the company purchased the 50 shares of capital stock which it had previously issued to Wege as stated, paying therefor $5,000 in cash, and the second clause of the contract of March 25, 1910, was canceled, including the obligation of the company to pay Wege 2 per cent. quarterly on its safe-cabinet business, though it is to be noted that before this second clause was canceled Wege had been paid under the 2 per cent. provision the sum of $3,595.39. Thus, Wege was at last guaranteed his position as superintendent for at least five years from February 1, 1910, under a salary graduated between $3,000 and $5,000 according to the amount of the company's business in its safe-cabinet construction, and was also paid a total of more than $8,500 on the faith of his promise to treat as the company's property all of his improvements of the safe-cabinet and all of his developments and inventions embodying any of the principles of the safe-cabinet construction.

He carried out these contracts for a time, both as superintendent and inventor. Of his own accord he left the company's service as its superintendent February 1, 1912, just two years after the guaranty of his position began to run; but before leaving he conceived at least four inventions in the safe-cabinet art, and applied for patents upon all of them. Patents upon three were issued to him as assignor to the company prior to severing his employment as superintendent, and upon the other after that event. These patents may be identified thus: No. 993,483, May 30, 1911, relating to a door which the drawings show is a safe-cabinet door; No. 993,627, May 30, 1911, providing for an improved "cabinet, safe, or other walled structure," and the drawings show a safe-cabinet; No. 999,929, August 8, 1911, which is declared in the specification to be "particularly adapted for fireproof cabinets and safes"; No. 1,038,038, September 10, 1912,

Digitized by Google

relating to a "combined shelf and partition, more especially for sheet metal cabinets."

[1, 2] Wege refused, however, to accede to a demand of the company to assign to it the patent in suit, and this resulted in the present action. Whether Wege is under contractual obligation to assign this patent is the issue. Wege applied for the patent August 16, 1912, and it was issued February 25, 1913, No. 1,054,325, entitled "Sheet Metal Safe or Cabinet." In view of Wege's covenants with the company, before pointed out, it is important briefly to consider the meaning and scope of safe-cabinet construction, in connection with the subject of the patent in suit. This is not to imply, however, that the comparison so suggested need be carried to the extent usually required in a patent suit. We are not called upon, for instance, to pass upon any question of validity or infringement of the patent in issue. We have only to determine whether the subject-matter of the patent falls fairly within the category of "safe-cabinet" or "safe-cabinet construction," as those terms were used in defining the contractual obligations of the parties.

The business of producing what is known as the safe-cabinet appears to have originated in 1905 with a copartnership, which was carried on under the name of the present appellee and was subsequently converted into a corporation. Willis V. Dick, a member of this copartnership and now president of appellee, testified that he manufactured "a fire-resisting product known as the safe-cabinet produced by the Safe-Cabinet Company," and, further, that he "was the inventor of the original safe-cabinet." Although it is insisted that some of the elements of his safe-cabinet are old, we do not find any contradiction of this testimony. A patent was issued to Willis V. Dick, January 9, 1906, No. 809,497, entitled "Fire-Resisting Cabinet." He states in his specification:

> "The object of this invention is to provide a fire-resisting cabinet, chiefly of sheet metal, which shall be of simple and economical construction, and in which papers, documents, and other perishable things may be stored with reasonable assurance against loss or injury by fire and water, especially in incipient conflagrations."

The structure is described in detail in his specification and is illustrated by accompanying drawings. Its appearance is similar to that of the old type of safes. Its interior is equipped with shelving designed for the filing of papers, documents, and the like; the end (or side) and back walls, as also the two doors in front, are composed of exterior and interior vertical plates of sheet metal, which are so spaced and fastened one with another as to form air chambers between them; the base and top are composed of heavy sheet metal suitably adjusted and, through the use of bolts and nuts or rivets, fastened to the walls. The interiors of the sheet metal walls and of the doors of the cabinet are provided with a sheeting of asbestos to protect them against heat. Metal tie pieces and braces are used for connecting the vertical terminals of the end and back walls and bracing them; and the specification suggests that the paneling of the metal will add to the rigidity of the structure and also enhance its appear-

Digitized by Google

ance. The doors are provided with lips all around, so as to lap on the front of the cabinet and on each other, and are provided with combination lock, etc. The prominent results sought to be obtained by this construction, according to the specification and claims, were its double walls, lightness, rigidity, fire-resisting qualities, and economy.

The claims do not specify doors, and it is to be noted that some of the models introduced have doors and some have not. A number of the claims relate to the interior shelving, which is not important in the present suit. Claims 1, 2, and 9 may be treated as typical, so far as present pertinency is concerned, of the patented device; they are copied in the margin.[1]

A specific description of a patented structure confessedly belonging to the safe-cabinet art is to be found in Safe-Cabinet Co. v. Globe-Wernicke Co., 242 Fed. 497, 155 C. C. A. 273 (C. C. A. 2). The patent there in suit, No. 999,929, was one of those issued to Wege as assignor to the present appellee, as above pointed out.[2] The patent was held anticipated and invalid; and it is to be observed that one of the anticipating patents there cited and commented on was the Dick patent, above partially described for purposes of the present case. In alluding to the Dick patent, Judge Rogers said (242 Fed. at page 505, 155 C. C. A. at page 281):

"Also prior in time to Wege is the Dick patent, No. 809,497, applied for on February 7, 1905, and issued on January 9, 1906. That was granted for 'new and useful improvements in fire-resisting cabinets.' The specification discloses a double walled sheet metal cabinet of the general shape and outline of that in which it (the complainant) now claims to employ the invention of the patent in suit. It describes 'paneling of the metal' as employed to give rigidity to the structure, and uses interlocking flanges to join the sheet metal parts together, but reinforces these joints by the use of screws and rivets. It is indistinguishable in function and in general appearance from the patent in suit."

---

[1] "1. In a fire-resisting cabinet, the combination, with a base, of end and back walls of sheet metal, said end wall having an inwardly standing vertical terminal portion *1c* and said back wall having an outwardly standing vertical terminal, a tie piece for connecting the said terminals of said end and back walls consisting of a doubly and oppositely grooved piece in which said terminals project, and means for securing said piece to said terminals."

"2. In a fire-resisting cabinet, the combination, with a base, of end and back walls of sheet metal, a tie piece and brace for connecting the vertical terminals of said end and back walls and bracing the same, consisting of strip of metal bent to form a double groove into which the said terminals project and a wing to constitute the brace."

"9. In a fire-resisting cabinet, the combination with a suitable base, of the vertical casing thereof comprising an outer wall of sheet metal made in three pieces, to wit, end portions *1* having back portions *1a* integral therewith extending partially across the back, and portions *1b* integral with the end portions extending partially across the front and a portion *2* connecting the edges of the portions *1a* at the back, and an inner wall also of sheet metal extending parallel to the outer wall and joined thereto at or near the edge of the wall *1b*, substantially as described."

[2] The complete double wall feature of the structure described in this patent is to be particularly noticed, since it shows that Wege, as well as the company, regarded this feature as a distinct element of safe-cabinet construction more than a year and a half before the patent in suit was issued.

Digitized by Google

Examination of that decision, in connection with the fact that Wege considered himself bound to assign the patent there in suit to the present appellee, cannot fail to show that when designing that device Wege regarded the principles of safe-cabinet construction as at once broad in scope and calling for development. That he believed the subject was meritorious is shown by his testimony in the present case:

"It is a fireproof article, and it is the lightest fireproof article in steel furniture I have ever seen."

And although the patent here in issue contains all the essential elements, or their equivalents, of the safe-cabinet construction, yet Wege in effect relies on a single feature and the claimed relation of that feature to the other elements of the patent, to show that the patent does not belong to the safe-cabinet art. We have seen that Wege applied for the patent August 16, 1912, a few months after he quit the company's service as superintendent. He stated in his specification that he had "invented certain new and useful improvements in sheet metal safes or cabinets"; also:

"This invention relates particularly to improvements in sheet metal safes or cabinets, with sheet metal walls. While my improvements are particularly available for safes and the like, and I have illustrated the same embodied in a safe structure, the invention may be made use of in double walled structures in various relations."

The main objects of the invention, he in substance adds, are "to provide an improved sheet metal walled structure which is" (1) "light and simple," "economical to produce," "easily and quickly assembled"; (2) "very rigid"; (3) "in which the passage of heat through the wall joints and door joints is quite effectively prevented." It is unnecessary to point out the practical identity in name and objects of this structure with the name and objects of the safe-cabinet; this is manifest. Further, the drawings throughout illustrate a safe-cabinet and nothing else; and it has been placed in direct competition with appellee's safe-cabinet.

What Wege does here is to place two rectangular metal frames within the walls to engage and reinforce them. The rear frame is held in place between the outer and inner rear walls, such inner wall engaging the entire inwardly turned flange of the frame; the front frame is contained within inwardly turned angle flanges of the front terminals of the outer top, bottom and side walls; the front frame and the edges of the rear wall engage respectively the front terminals and the rear terminals of the inner top, bottom, and side walls; specific description of these parts, or of the mode of assembling them, is not of present importance; it is sufficient to say that the structure is a double wall safe-cabinet. The most that can be said of the frames is that they serve to enhance the rigidity of the structure. When once placed in position, they differ in form, though not in function, from the frame of the patent, No. 999,929, turned over to appellee by Wege in pursuance of his contract, as already stated (see in this connection Safe-Cabinet Co. v. Globe-Wernicke Co., supra, 242 Fed. at page 501, 155 C. C. A. 273); but, save in matter of de-

Digitized by Google

gree, it is hard to perceive any material difference in either function or operation between the frames of the patent in suit and the metal tie pieces and braces above pointed out in the Dick patent (see claims 1 and 2, note 1, supra). True, as before indicated, counsel urge in Wege's behalf that the frames of the patent in suit are made distinct elements of each of the combinations recited in all but one of the claims, and that these frames and their connections with the other parts constitute the subject-matter of the patent; and the decision of this court in the Scaife Case, 209 Fed. at pages 214, 215, 126 C. C. A. 304, is cited in support of a contention in substance and effect that the claims of the patent in suit must be construed as entitling Wege to combine and use with his frames the old parts of the safe-cabinet; in other words, that by introducing into its construction a new method of bracing and strengthening the safe-cabinet he could rightfully monopolize the whole. This ignores alike the contract on which the instant case is founded and the fact that no contractual question was involved in the Scaife Case. The present contract is explicit, and, unless the parties themselves have placed a practical construction upon it which is inconsistent with the recovery here sought, the language of the instrument itself must control the case.

It is insisted for Wege that the patent in suit is but a development of what is called the Unette patent, No. 993,484, which was issued to Wege May 30, 1911; and it appears that on December 5, 1911, the company gave to Wege a certificate that the contract between the parties did not involve the Unette patent, and that he was "free to deal with this particular patent according to his own will and opportunity." It is to be observed that this certificate was delivered about one month after the date of the last contract the parties entered into. We are unable to appreciate the claimed relevancy of this patent to the present controversy. In the first place, the Unette patent does not call for a double wall structure within the meaning of safe-cabinet construction; it only calls for a supplemental interior wall on two sides to secure the bracing pieces in position. The reason for not following the Unette plan is to be found in Wege's specification for the patent now in suit:

> "A double walled structure is secured which is of very great advantage in safes and structures of like character."

Assuming, as counsel claim, that double walls were old, yet this could not help Wege. Since double walls were an essential feature of the safe-cabinet at the time Wege entered into the contract in issue, he could not thereafter appropriate this element to himself as part of an improved safe-cabinet upon any theory either that the element was old or that the element was contained in his Unette patent. In the next place, it is true that for the purpose of strengthening the Unette device Wege placed metal angle braces, calling them in his claims "angular bracing pieces," at the corners of the structure, though the arms of these braces were made to extend only short distances from the corners. These angle braces may be helpful in a partially double wall structure, like the Unette, but they have never been used in a double wall structure, like the safe-cabinet. It was there-

Digitized by Google

fore not unnatural for the company in December, 1911, to yield as it did to Wege's solicitation to give him the certificate in question. It is an entirely different matter, however, for Wege now to claim that he thus secured a right, not only to convert the Unette into a double wall safe-cabinet, but also to make a distinct improvement upon the bracing features of the safe-cabinet, and then treat the invention as his own property. The language of the certificate does not warrant such results as these. Wege was left "free to deal with this particular [Unette] patent according to his own will and opportunity." It was that patent, not the patent in suit, to which that language was applied. Saying that Wege might "deal" with the Unette was far from saying that he might convert the device into a structure that would destroy both the contract and the safe-cabinet.

Another Wege patent, No. 1,017,354, issued February 13, 1912, is offered to show that the company recognized the right of Wege to use metal corner braces similar to those of the Unette patent, and also in a structure of extraordinary width to employ an intermediate metal interlocking piece to connect with an arm of each of two opposed corner braces, leaving the other arms of such corner pieces of their normal length. This interlocking connection is effected by making a recess and a tongue near the end of each of such opposed corner bracing arms and near each end of the intermediate member, so that such recesses and tongues will register one with another. Here again we find, as in the Unette patent, an inner supplemental wall on two sides of the structure to hold the interlocked pieces in place. It does not appear that this structure has been specially adapted to safe-cabinet construction, nor that it has ever been used in a construction of that kind. The patent was offered to the company, however, if it would accept and pay for it under the second clause of the contract. Our attention is called to the circumstance that the president of appellee appears to have been one of the witnesses to the letters patent; but this, like the refusal to accept the patent, would seem to signify that the interlocking device was not regarded as useful. It is vain for counsel to say that the company's attitude toward this patent was not consistent with its demand for an assignment of the patent in suit. That patent is not like the patent in suit; but, if it were assumed that a mistake was made in not demanding its assignment, this could not affect the validity of the demand made for the patent in suit.

[3] In view of all the facts we are convinced that the patent in suit is a development of the safe-cabinet, and not of either the Unette patent or the patent last considered (1,017,354), and hence that the case must be controlled by the first clause of Wege's contract of September 8, 1909. This contract is distinct from the one employing Wege as superintendent, and according to its terms it is still subsisting. As we have seen, the first clause of this contract obligated Wege, in consideration of $5,000 in paid-up stock of the company, to turn over to it all of his "present and future mechanical improvements of the safe-cabinet" and all of his "developments and inventions embodying any or all the principles involved in the safe-cabinet construction." At the dates of these two contracts the company was the owner of the

Digitized by Google

Dick patent, and under this patent was engaged in the business of producing the safe-cabinet; through the contracts Wege became pecuniarly interested in the company; both his salary as superintendent and the value of his stock were to be directly affected by the success of the business. It hardly can be doubted that in such circumstances it was competent for the parties to bind themselves according to the covenants of the first clause of the contract of September 8, 1909. It is true that contracts of this character are more frequently entered into with reference to assignments of particular patents and protection of the assignees against impairment, if not destruction, of the value of the patents through improvements subsequently made by the assignors. It is a well-settled rule that contracts of this latter class, when couched in unambiguous terms, are binding and specifically enforceable. Littlefield v. Perry, 88 U. S. (21 Wall.) 205, 222, 22 L. Ed. 577; Aspinwall Mfg. Co. v. Gill, 32 Fed. 697, 700 (C. C.), by Mr. Justice Bradley; Printing & Numerical Registering Co. v. Sampson, L. R. 19 Eq. 462, 464, by Sir George Jessel; Lion Tractor Co. v. Bull Tractor Co., 231 Fed. 156, 161, 145 C. C. A. 344 (C. C. A. 8); Westinghouse Air Brake Co. v. Chicago Brake & Mfg. Co., 85 Fed. 786, 791 et seq. (C. C.). The recent case of American Cone & Wafer Co. v. Consolidated Wafer Co., 247 Fed. 335, 159 C. C. A. 429 (C. C. A. 2), is distinguishable from this class of decisions, because the contract there involved was regarded by the court as vague and uncertain.

[4] The principles of that class of decisions are essentially applicable to contracts like the present one. Here was a special business founded on a particular patented device, the safe-cabinet; the covenants in question were limited to the "present and future" improvement and development of the safe-cabinet, and save in this respect did not purport to interfere with Wege's exercise of his inventive faculties. The subject of the contract was known to Wege when he entered into it; as long as his pecuniary interest continued Wege performed his covenants; in this period he was told all the business secrets and designs of the company. Can it be that he could absolve himself from the obligation of the contract by voluntarily selling to the company his stock and then withdrawing from its service as superintendent? Apart from the analogy of Wege's covenants to those considered in the class of decisions already cited, we think an inventor may, under such circumstances as exist here, aside from his right to bind himself as an incident to his assignment of a patent, lawfully obligate himself to improve and develop a particular device belonging to another person and to assign or otherwise turn over to such person any inventions he may produce in that behalf. This in principle is recognized with respect to contracts of employment where appropriate provision is made in the contract; it is true that the employé's production may be limited to discoveries made during his employment, but this cannot militate against the right to provide for continuing the obligation, regardless of the period of employment; if such safeguard were not available, the inventor might through knowledge obtained in his employment evade the contract later and render it valueless. Hulse v. Bonsack Mach. Co., 65 Fed. 864, 866, 13 C. C. A. 180, et seq. (C. C. A. 4); Thompson v. Automatic Fire Protection Co., 155 Fed. 548, 550 (C. C.); Id., 197

Digitized by Google

Fed. 750, 752 (D. C.), affirmed 211 Fed. 120, 121, 128 C. C. A. 22 (C. C. A. 2). See, also, Reece Folding Mach. Co. v. Fenwick, 140 Fed. 287, 288, 72 C. C. A. 39, 2 L. R. A. (N. S.) 1094 (C. C. A. 1), Judge Putnam announcing the opinion, though specific performance of the contract was denied for a reason of no present importance. It follows that the present contract is not open to counsel's criticism that this interpretation of Wege's covenants is opposed to sound policy, in that it would prevent him from developing the Unette patent and amount to "a mortgage on a man's brain." The difficulty with the criticism is that under the guise of the Unette patent Wege has produced a safe-cabinet, and so has invaded even the limited field he obligated himself to cultivate for the benefit of appellee.

[5] Counsel call attention to the fact that the contract does not in terms require Wege to transfer to appellee any patent resulting from future inventions. In view of the rule laid down in Littlefield v. Perry, supra, 88 U. S. (21 Wall.) at page 226, 22 L. Ed. 577, we think Judge Sessions correctly disposed of this objection:

"While the contract does not contain a specific provision for the assignment of patents which under its terms are 'the property of the safe-cabinet company,' such requirement is clearly and necessarily implied. Moreover, by the assignment of four previous patents, defendant has expressly recognized his obligation to assign."

[6] After the opinion below was announced, Wege obtained leave to file an account of alleged cost of developing the structure of the patent in suit and securing letters patent, $3,693. This was disallowed, except as to this last item of cost $135.50. Error is assigned to such disallowance, but nothing more than the assignment is set out in the brief, and it must be regarded as waived.

The decree is affirmed.

(249 Fed. 705)

BOLIN et al. v. WILKES et al.

(Circuit Court of Appeals, Fifth Circuit. March 18, 1918.)

No. 3181.

1. MORTGAGES ⟹37(2)—DEEDS ABSOLUTE ON THEIR FACE—PAROL EVIDENCE.
   A conveyance of land absolute in form, without an accompanying defeasance, contract of repurchase, or other agreement in writing, may in equity, by extrinsic and parol evidence, be shown to be a mortgage, without violating the parol evidence rule or the statute of frauds.

2. MORTGAGES ⟹608½—SUITS TO DECLARE DEED A MORTGAGE—INCIDENTAL RELIEF.
   As an incident to a suit to have a deed absolute on its face declared a mortgage, court of equity has jurisdiction to declare an accounting for the profits received from the property.

3. MORTGAGES ⟹32(3)—DEED ABSOLUTE IN FORM.
   While the relation of debtor and creditor is essential to the existence of a mortgage, a conveyance absolute in form, but as security for debts of the grantor, which the grantee agreed to assume, will be treated in equity as a mortgage; the debts not being extinguished by the conveyance.

⟹For other cases see same topic & KEY-NUMBER in all Key-Numbered Digests & Indexes

Digitized by Google

4. MORTGAGES ⟹591(3)—EQUITY OF REDEMPTION—EXTINCTION BY AGREEMENT.

The parties to a mortgage cannot, by any stipulation or contract therein or contemporaneous therewith, extinguish the right of redemption, and this is so though the conveyance be absolute in form; and hence, in the absence of an estoppel or a release of the equity of redemption, the right of redemption persists in the mortgagor and may be enforced.

5. MORTGAGES ⟹596, 597—EQUITY OF REDEMPTION—RELEASE AND ESTOPPEL.

A mortgagor may, by an agreement based on sufficient consideration and entered into after the execution of the mortgage, release his equity of redemption; likewise he may estop himself from asserting that right.

6. MORTGAGES ⟹37(2)—SUIT TO HAVE DEED DECLARED MORTGAGE—PAROL EVIDENCE.

Where land was conveyed by deed absolute on its face as security for a debt, and a representative of the grantor remained in possession of either the whole or a part of the premises, Code Miss. 1906, § 4783, declaring that a conveyance or writing absolute on its face, where the maker parts with possession, shall not be proved by parol evidence to be a mortgage, unless fraud in its procurement be the issue to be tried, has no application.

7. MORTGAGES ⟹608½—SUIT TO HAVE DEED DECLARED MORTGAGE—AVERMENTS OF FRAUD.

A bill seeking to have a deed absolute on its face of lands partly located in Mississippi declared a mortgage, which alleged that the defendant induced the grantor, an old man, who was in difficulties, financial and otherwise, to have the lands conveyed to her under an agreement that she would pay off indebtedness and would reconvey the property upon being reimbursed, that the offer was made with intent to defraud, and that after securing the conveyance defendant made excessive demands and prevented the grantor from repaying her advances, etc., sufficiently charges fraud to take the case out of Code Miss. 1906, § 4783.

8. EQUITY ⟹141(1)—MORTGAGES ⟹608½—BILL TO DECLARE DEED A MORTGAGE—SUFFICIENCY.

The sufficiency of a bill is not to be determined by a consideration of whether the pleader will be able to establish his allegations; so a bill seeking to have a deed absolute on its face declared a mortgage is not subject to attack under Code Miss. 1906, § 4783, on the ground that the character of the instrument could only be established by parol, where the bill set up writings showing the mortgage character of the deed.

9. MORTGAGES ⟹37(2)—SUIT TO DECLARE DEED A MORTGAGE—PAROL EVIDENCE.

Under Code Miss. 1906, § 4783, declaring that a conveyance absolute on its face, where the maker parts with possession, shall not be proved by parol evidence to be a mortgage only, unless fraud in its procurement be the issue to be tried, parol evidence is admissible to show that a written memorandum, executed by the grantee, acknowledging mortgage character of a deed absolute on its face, was delivered, and that the person to whom it was addressed was acting for the grantor, since, like the statute of frauds, this statute would not exclude all oral evidence, where controlling and essential features are established by written evidence.

10. FRAUDS, STATUTE OF ⟹63(5)—TRUSTS—DEEDS ABSOLUTE ON FACE—MORTGAGES.

Code Miss. 1906, § 4780, declaring that declarations or creations of trusts shall be made and manifested by writing, but that, where any trust shall arise or result by implication of law out of a conveyance of land, such trust shall not be affected by the statute, by its own terms excepts a mortgage created by deed absolute on its face.

⟹For other cases see same topic & KEY-NUMBER in all Key-Numbered Digests & Indexes

Digitized by Google

Appeal from the District Court of the United States for the Southern District of Mississippi; Henry C. Niles, Judge.

Bill by E. E. Bolin, trustee for William Schild, and another, against Mrs. E. E. Wilkes and others. From a decree dismissing the bill, complainants appeal. Reversed.

Bolin, as trustee for William Schild, and another, filed a bill in the District Court for the Southern District of Mississippi, against Mrs. E. E. Wilkes and others, making, in addition to formal statements, allegations, in substance, as follows:

(1) William Schild, in October, 1916, executed to Bolin, trustee, a deed of trust conveying the real property in controversy.

(2) In 1906 Schild procured from the Grenada Bank a loan of $17,000, and pledged as collateral $33,000 of the notes of the Southern Land Company, secured by a trust deed on part of the land in controversy. This loan was reduced by payments, until on October 9, 1912, the indebtedness amounted to $3,976.99. The Southern Land Company failed to pay its notes, and the property described was sold under foreclosure, bid in in the name of the bank, and conveyance made to it, to be held in trust for Schild, and as security for the balance unpaid on his indebtedness. When the original loan was made, and as further security, Schild conveyed another part of the property in suit to J. T. Thomas, president of the bank. During the period the title to these properties was thus held, from 1906 to 1912, Schild paid the taxes and was in possession of the property, collecting the rents therefrom. When the loan was made, Thomas, acting for the bank, executed a trust agreement, whereby he agreed to hold the title as trustee, and, when the notes were paid, all property and land held as collateral were to be reconveyed to Schild, or to whomsoever he might direct. When the Southern Land Company defaulted, the bank purchased the land sold under the deed of trust of the Southern Land Company, and held the same in trust as security for the debt due by Schild; the land being substituted for the notes primarily held as collateral. In the year 1911, and until June, 1912, Schild was in a sanitarium at Biloxi, and later in the insane hospital at Jackson, where he received treatment for nervous trouble. When he returned, he was advised by the bank that the balance due on the notes must be paid on or before December 1, 1912. The bank at that time recognized that the beneficial title was in Schild, and that the lands were held under the trust agreement. On August 11, 1912, Schild was due the bank $3,987. To give him time in which to arrange to secure money to pay the debt, an extension to December 1, 1912, was granted by a writing dated September 13, 1912.

(3) At various times prior to 1906 Schild purchased the balance of the property described in suit, and had conveyances made to his wife, Mrs. J. M. Schild. On September 30, 1911, Mrs. Schild executed a trust deed, securing $2,000, to R. E. Howard, conveying the land to J. E. Ham, trustee. On September 30, 1911, she executed a second trust deed to secure $2,600. On September 14, 1912, all of this property conveyed to Ham, trustee, was conveyed to Schild by Mrs. Schild in a property settlement had between them; this conveyance being subject to the two deeds of trust securing debts amounting at that time to $3,135.

(4) After the discharge of Schild from the insane hospital, he found that large property holdings, other than those involved here, had been dissipated. During the month of September the bank insistently demanded payment of the balance of the $17,000 loan. About the time of his release, his brother Joel Schild had been making efforts to procure the necessary money to pay off this indebtedness to the bank. Defendants Mrs. E. E. Wilkes, B. B. Wilkes, and John Wilkes were aware of Schild's confinement and of the threatening attitude of the bank with reference to the indebtedness. Mrs. E. E. Wilkes volunteered to Joel Schild to lend the necessary money to pay the bank debt, and to take title to the properties held in trust by the bank, the property to be held by her under all the conditions under which it was held by the bank. In furtherance of this, and to ascertain accurately the situa-

Digitized by Google

tion, Mrs. Wilkes on September 5, 1912, addressed a letter to Thomas, the president of the bank, stating that Joel Schild had applied for money to pay off the loan, and that whenever the money was repaid, which she had agreed to advance, the title would be reconveyed. The Wilkses had actual notice of the terms under which the bank and Thomas held the property under a written agreement. Some time after the release of William Schild he was apprised by his brother of the offer of Mrs. Wilkes, and was notified by Thomas, president, that Mrs. Wilkes would take up the debt and hold the property in trust. Thomas wrote a letter to Schild, explaining why it would be to his advantage to allow Mrs. Wilkes to take up the indebtedness. While in the latter part of October, 1912, William Schild was negotiating with friends to secure money to take up the debt due the bank, and had arranged and was about to consummate the loan, the offer theretofore made by Mrs. Wilkes was made directly to him; the offer, however, being conditioned upon Mrs. Wilkes' being permitted to take up, not only the indebtedness due the Grenada Bank, but the indebtedness secured by the two deeds of trust to Ham. It was a part of the inducements held out to Schild that, as to the property held by the bank, the title to be taken and held by Mrs. Wilkes was subject to the terms and incidents of the trust agreement executed by the bank. The loan was accordingly agreed upon, interest to be at 6 per cent., and there was to be no date of maturity. It was further agreed that the two trust deeds then held by Ham should be foreclosed and the property sold under the trust deeds, and should be bid in for the benefit of Schild for the amount of the debts—that is, $3,135—which was to be paid by Mrs. Wilkes, but with the specific understanding that the title should be held for the benefit of Schild, and as a part of the security for the loan. By subsequent agreement Schild agreed to pay $135 of the amount due under the two trust deeds, reducing the aggregate loan to $6,976.99. In consummation of this agreement, Mrs. Wilkes, on or about November 1, 1912, paid the amount due the Grenada Bank from Schild, and the properties theretofore held by the bank and Thomas were conveyed to her. In consummation of the agreement, Ham, trustee, made sale of the properties conveyed to him in trust for the amount of the debt due, $3,135; Mrs. Wilkes paying him such amount, but receiving from Schild $135, in accordance with the agreement. It was part of the agreement that title to all the properties covered by the trust deeds to Ham should be subject to the terms existing with reference to the properties theretofore held by the bank, in recognition whereof Mrs. Wilkes thereafter agreed in writing that title to all of said property was held for the benefit of Schild, and as security, and that she would reconvey upon payment of the indebtedness to her. Friendly relations between the Schild family and the Wilkes family had existed for many years. Mrs. Wilkes and her representatives knew that Schild had just returned from the insane hospital; that he was very much embarrassed financially, and had unfortunate domestic troubles. Mrs. Wilkes, acting under the pretense and guise of friendship, represented that she had no desire to do other than to render Schild financial aid, for the purpose of saving his property from being sacrificed at foreclosure sales. Schild, believing said offer was in good faith, consented to Mrs. Wilkes' taking title to his properties, and, relying upon her representations, arranged for the transfer to her as successor in trust to the bank and Ham. After conveyance made Mrs. Wilkes and her representatives repeatedly acknowledged that all of the property was held in trust for Schild, and stated that whenever the indebtedness was paid, either in cash or from rents and profits arising from the property, she would immediately reinvest Schild with title. Mrs. Wilkes and her representatives were not in good faith in any of their offers to assist Schild in his financial distress; but they, with full knowledge of all the circumstances and conditions, took advantage of him for the purpose of fraudulently procuring legal title to all of his property, and after she had received the rents and profits therefrom, and waited for a sufficient length of time to elapse for the purpose of lending color to her now pretended claims to absolute title and ownership, she now claims absolute title and beneficial ownership against Schild, in fraud of his rights

Digitized by Google

and in violation of the trusts under which she accepted titles, and all of the representations, inducements, and agreements made by her to Schild when conveyances were procured by her. She now claims the right to exclusive possession, and to be in exclusive possession, of all the property, in disregard and violation of the rights of Schild. The conveyances from the bank and Ham, trustee, to her, were all procured by fraud, and with the ulterior intent on her part to defraud Schild of his interest in all the properties, and, through such fraud, to ultimately assume the absolute ownership and to defeat the equitable ownership of Schild. In furtherance of said scheme, when Schild was at divers times offered reasonable and fair prices for timber on portions of the properties, or was offered reasonable and fair prices for portions of the land, she, while admitting that he was the beneficial owner, discouraged the sale at such time, assuring Schild that there was no necessity of his selling, inasmuch as she would continue her trust and postpone payment of the loan until the rents and profits should repay the indebtedness to her, or until it was convenient for Schild to repay in cash. On each occasion, when opportunities for sale of land or timber arose, Schild offered to apply the proceeds on the indebtedness, and on each occasion he failed to avail himself of the opportunity, relying on the assurances of Mrs. Wilkes that she would continue to hold the title in trust without pressing him on his debt. A large portion of the land was then in cultivation and rented, and bore large rentals, which it was agreed should be paid to Mrs. Wilkes on the loan. It was a part of the understanding on which the loan was made that the rentals should be applied, first, to the payment of taxes, and would, within a few years, pay out the loan and interest, in the event Schild should not sooner pay in cash. Schild paid in cash a portion of the taxes after title was vested in Mrs. Wilkes, and the renting of the land has always been under his supervision. Parts of the property, described as the Lipsey place, and a few acres, described as the Bentwood place, and the houses in the town of Durant, and the property in St. Joseph county, Mich., are the only properties susceptible of actual occupancy. While Schild was confined in the asylum, his brother had control of said properties, and rented them and collected rentals. When title was vested in Mrs. Wilkes, it was agreed that Joel Schild should continue to rent the property as the representative of Schild. Shortly thereafter Joel Schild was induced by Mrs. Wilkes to move on the Lipsey place for the purpose of terminating the general supervision by Schild, and to restrict his supervision to the Lipsey place, with the agreement, however, that all rentals should be applied as credits on the indebtedness of William Schild to her. The removal of Joel Schild to the Lipsey place was not intended as a surrender of the right of possession, but with the distinct understanding that the rents should thereafter be merely received by her and applied as credits on the loan. Ever since the moving of Joel Schild to the Lipsey place he has been in occupancy and control, and supervised the tenants, for the purpose of the application of rents and profits to the reduction of the indebtedness. All the rentals have been received by Mrs. Wilkes, and should have been, under the terms of the agreement, applied to the indebtedness. No due date of the loan was fixed, because it was estimated that the net rentals would satisfy the same in a few years. It was agreed that Schild should be permitted to pay off the loan at any time, although he was induced to believe that he would never be pressed for payment, but that the debt would be gradually retired by rentals. Over and above all taxes and proper charges on the land since November 1, 1912, the net rentals received by Mrs. Wilkes have been more than sufficient to repay the loan and interest, and she is now indebted to plaintiff as trustee for William Schild in the amount of the excess. A large portion of the property was wooded with valuable timber. Shortly after the loan was made, Schild was offered $6,500, net, for the oak, hickory, and gum timber on the property. He was then advised by Mrs. Wilkes not to accept this offer, and that it would be to his best advantage not to dispose of the timber, but that the rents would be ample to pay taxes and retire the loan. At this time there were some 1,350 acres of land in timber, a large portion of which was in a

Digitized by Google

virgin state; that, notwithstanding Schild was discouraged by Mrs. Wilkes from disposing of any of the timber, and notwithstanding the agreement that none should be cut or disposed of, timber of value far in excess of the original loan has been cut from the land and disposed of by Mrs. Wilkes, the exact amount plaintiff being unable to state. Plaintiffs are informed, and state on information and belief, that Mrs. Wilkes has recently sold to defendant V. Reinhardt a large amount of the timber now standing on the land, the amount of which and description of the land from which it is to be cut being unknown to plaintiff; that the sale, if made, is unlawful, and in violation of the agreement.

(5) Defendant Mrs. E. E. Wilkes had repeatedly recognized and admitted that Schild is the beneficial owner of the lands, and that same had been held by her merely as security. From time to time Schild endeavored to obtain statements from her of the amount then due her, and she has failed and refused to render any itemized statement, and has likewise never rendered any statement of rents, issues and profits from the lands, her only response to demands having been to state, in various writings, aggregate balances claimed to be due her. These balances were fraudulent and inflated, and their payment was required of Schild before he could obtain a reconveyance of his property. With a full knowledge on her part that Schild was unable to pay such excessive amounts, said requirements were made for the fraudulent and unlawful purpose of defeating his right to reconveyance, and of unlawfully and fraudulently withholding his property. That the original loan of $6,976.99 is the only money ever received by Schild from Mrs. Wilkes, and an accounting will show that said sum and all proper interest has been paid, and that there is a balance due him. When each of said fraudulent statements was rendered, Schild denied liability for the amount claimed, and has never acquiesced in the justice of any of said claims, except to the extent of the proper balances then due. That Schild is a very old man, worn down by great vicissitudes and misfortunes and the weight of years. With the exception of the properties herein involved, he has been denuded of a large fortune, and the properties herein in suit constitute all left to him. Except by acceding to the unjust and excessive claims, he has been utterly unable to reach any amicable adjustment with Mrs. Wilkes. He has been without funds during the entire period of the transactions, and altogether unable to obtain financial aid necessary to enforce his rights. On several occasions, after Schild would call for statements, and excessive amounts had been claimed, he, being without funds and unable to stand the expense of litigation, took up negotiations with her, in an effort to fix the proper amount. On various occasions she had given written statements that she would convey the property upon payment to her of these amounts. Oppressed by want, and without the means to enforce his rights, but at all times denying liability for the amount claimed, Schild, at various times, undertook to secure money to pay the excessive demands, and further sought to sell portions of the property for that purpose. On several occasions he has found persons willing to lend him sufficient money to pay such excessive demands, but the consummation of the loans has been prevented through the active and fraudulent interference of Mrs. Wilkes or her representatives. On two occasions Mrs. Wilkes actually executed deeds reconveying property involved, which were deposited in escrow, notwithstanding all of which the proposed loans were defeated through her fraudulent interference, and with intent on her part to retain possession of the property. The property is worth $56,525. Defendants B. B. and John Wilkes attend largely to the business of E. E. Wilkes, and have been active participants in all the transactions complained of. B. B. Wilkes and John Wilkes have been suffered to receive, use, and enjoy a large part of the rents and revenues collected from the property and the proceeds of the sale of timber. Diligent efforts to ascertain the amount of timber cut by them have been without success, and the amount or value of the timber taken cannot be stated with accuracy. The ascertainment of the amount of rents and profits, and the amount and value of the timber involves a complicated state of accounts; much of the land having

Digitized by Google

been rented on shares, and the sales of the timber involving transactions with numerous persons. Plaintiffs are entitled to an accounting, to the end that the amount of the rents and profits, and the amount and value of the timber cut and the respective liabilities of defendants, may be ascertained. Plaintiffs deny that any amount is due to Mrs. Wilkes; but, if mistaken, they are unable to make tender until the amount has been ascertained upon an accounting, and they express a willingness to do anything which the court may find equitable to entitle him to a redemption of the property. They are entitled to have a conveyance from Mrs. Wilkes of all the property, and a full discovery from the defendant Reinhardt of the timber taken and of the contracts made with him, and the price, date, and terms of the sales and of the amount paid, and to have the proceeds of the sale impounded, and, pending the determination, are entitled to a receiver to collect the rents, issues, and profits, and also entitled to have injunction against any further disposition, by sale, removal, or otherwise, of any timber, and of the collection of any rents.

Plaintiffs pray: (1) That the account be stated between Schild and Mrs. Wilkes. (2) That defendant Reinhardt make discovery of all facts relating to any sales to him of timber. (3) That pending the suit an injunction issue, restraining the defendants from cutting timber, and from collecting any rents, etc. (4) That a receiver be appointed to take possession of the property, etc. (5) That plaintiffs be permitted to make payment of such amounts as may be found to be due, and that Mrs. Wilkes be compelled to convey the lands to Bolin, trustee. (6) That plaintiffs have judgment against defendants for such amount as may be found due them. Prayer for general and equitable relief.

Among the exhibits attached to the bill are: Exhibit No. 2: Document signed by Grenada Bank, agreeing to sell to William Schild the property held by the bank in trust to secure his debt for the sum of $3,987, with interest from August 11, 1912, at 10 per cent.; taxes for 1912 to be paid by Schild; limited to December 1, 1912, and accepted in writing by Schild. On the back a note addressed to Grenada Bank, and signed by William Schild, directing the bank to make deed to E. E. Wilkes for the amount of the indebtedness. Exhibit No. 3: Letter from E. E. Wilkes to J. T. Thomas, with reference to taking up the indebtedness to Schild. Exhibit No. 4: Letter from J. T. Thomas, president, to William Schild, dated October 17, 1912, suggesting that he permit Mrs. Wilkes to take up the loan to the bank, and suggesting that a deed to the property could be made direct to Wilkes, in trust for Schild. Exhibit No. 5: A statement, signed E. E. Wilkes, of the indebtedness due from Schild, with a statement: "This includes all indebtedness due to date on property deeded to E. E. Wilkes by the Grenada Bank and J. E. Ham, trustee, which we will deed on payment of above."

Defendants filed motion to dismiss for the following grounds:

(1) The plaintiffs have a plain, adequate, and complete remedy at common law.

(2) That the plaintiffs have not made a case entitling them in a court of equity to any discovery or relief.

(3) That, according to the allegations of exhibits, the title was acquired by E. E. Wilkes through absolute deeds of conveyance; that said Mrs. E. E. Wilkes, ever since receiving said absolute conveyances, has been in possession and control of the land, and using the proceeds; that, while allegations are made that there were written acknowledgments of interest, no such writings are set forth in said bill, nor made exhibits, and therefore no such writings would be admissible in evidence in support of the bill; and that the allegations in relation to the writings are incompetent, irrelevant, and insufficient.

(4) That the bill seeks to enforce parol contracts for the redemption of each of the different tracts of land, upon a showing that Mrs. Wilkes acquired them by absolute and valid and unconditional deeds, and that said agreements or pretended contracts as to redemption are all oral, and therefore are void under the statute of frauds (Code 1906, § 4775), which provides:

Digitized by Google

"An action shall not be brought whereby to charge a defendant or other party * * * upon any contract for the sale of lands, tenements or hereditaments, or the making of any lease thereof, for a longer period than one year," unless the contract of sale or lease shall be in writing.

(5) That all the pretended contracts in relation to redemption or repurchase of said lands show that such pretended contracts are not in writing, and are void, because the same are not to be performed in one year from the making thereof, which statute of frauds is hereby specially pleaded.

(6) That, as shown, Mrs. Wilkes received absolute deeds to all the different tracts, and went into immediate possession of each of said tracts immediately after receiving said deeds thereto, and is still in possession of said property. Said absolute deeds cannot, on the showing of said amended bill, be converted into a mortgage or like instrument by parol evidence.

(7) That there is no cause of action, either with reference to the granting of an injunction or the appointing of a receiver.

(8) That there is no equity on the face of said amended bill, nor cause of action therein set forth.

(8½) That there is no allegation showing the creation of trust and confidence relation was in writing, signed and acknowledged and filed for record, as required by section 4780 of the Code of 1906.

(9) That the bill waives oath of defendant, and thereby deprives defendants of the privilege of using their answers to the matters of discovery called for as evidence, and thereby dispenses with such discovery by defendants and each of them.

(10) That said bill, as amended, seeks to establish, by parol evidence and proof, agreement to convey an estate, an inheritance or freehold in land, in violation of section 2763 of the Code.

(11) The bill shows that neither E. E. Wilkes, nor any agent of hers appointed in writing, made any written agreement in reference to said land.

The court sustained the motion to dismiss the bill, upon the grounds enumerated in exceptions Nos. 1, 2, 3, 4, 5, 6, 8½, 10, and 11; the seventh, eighth, and ninth being overruled.

C. L. Sivley and John H. Poston, Jr., both of Memphis, Tenn., for appellants.

E. F. Noel, of Lexington, Miss., for appellees.

Before WALKER and BATTS, Circuit Judges, and NEWMAN, District Judge.

BATTS, Circuit Judge (after stating the facts as above). [1, 2] The general principles upon which this case is to be decided are too well settled in equity jurisprudence to require extended statement or citation of authority. A conveyance of land, absolute in form, and without an accompanying defeasance, contract of repurchase, or other agreement in writing, may, in equity, by extrinsic and parol evidence, be shown to be a mortgage, and an incident to a suit for that purpose may be an accounting for fruits and profits received from the property. The admission of the parol testimony is held not to contradict or vary a written instrument, and not in contravention of statutes of frauds. The bill is apparently good in substance and form, and, unless there is something in the statutes of the state of Mississippi which changes the general rules to be applied, it must be held sufficient. Appellees, in discussing the case, make a number of propositions, each of which will be considered.

[3] I and V. Appellees' first proposition is that:

"No relation of creditor and debtor, or other elements of mortgage, are established."

Digitized by Google

Not only is it the case that the relation of debtor and creditor must subsist as a prerequisite to the existence of the mortgage, but it is also the case that, when such relation does exist, and a conveyance is made in which the debt is the consideration, and the debt continues to exist, notwithstanding the conveyance, the instrument will be a mortgage, and will have all the legal incidents of a mortgage with clauses of defeasance. In this case each of the pieces of property involved was conveyed to Mrs. Wilkes by a conveyance, absolute in form. Two of the lots were conveyed to her in a foreclosure sale. The other property was sold at public auction under foreclosure proceedings, and conveyed to the Grenada Bank, and by it conveyed to Mrs. Wilkes. The total amount of the consideration paid by Mrs. Wilkes was the exact amount of the debts due by Schild upon the properties conveyed to her. The allegations of the petition are to the effect that she suggested, before the conveyances were made to her, that she would take up the debts of Schild, provided the debts and the security were consolidated, and that she would so administer the property as to discharge the indebtedness from rents and profits, or permit Schild to pay the amount due at any time in cash. According to the further allegations of the petition, she repeatedly thereafter recognized the existence of the indebtedness, and stated accounts which it would be necessary to discharge before a reconveyance of the property. One of these statements was in writing, indicating the amount claimed by her, and stating that she would deed the property upon its payment. The existence of a debt is essential to the existence of a mortgage, and the existence of the debt in this case is amply and repeatedly alleged in the bill.

[4, 5] II. The second proposition made by the appellees is:

"Mortgages can be defeated and superseded by agreements subsequently made, by waiver or estoppel."

The general proposition is that a mortgagor cannot, at the time of the making of the mortgage, by any stipulation or contract therein or contemporaneous therewith, preclude his right to redeem. The nature of the instrument, whether in the ordinary form of a mortgage or in the form of an absolute conveyance, cannot by any contract then or thereafter made, be changed. It is, of course, the case that the right which remains in the mortgagor, whether considered as an equitable right (the legal title being in the mortgagee), or as ownership of the property (a lien existing for the benefit of the mortgagee), may be disposed of by him. He may, upon a sufficient consideration and in a proper way, release his equity of redemption to the mortgagee. He may also part with his right of redemption or his title to the land by authorizing, for that purpose, conveyance by the mortgagee to a third person; and it may be that conduct or declarations on his part might amount to waiver or estoppel, precluding the remedy he would otherwise have. Nothing, however, in this bill indicates either an agreement with the mortgagee that his equity of redemption or other rights should pass to her, or the existence of any fact or conduct upon which a waiver of right to redeem, or giving rise to an estoppel to assert the right, might be predicated.

Digitized by Google

As to the land held by the Grenada Bank, and that held by Thomas, the president of the bank, the petition alleges that, while the title was held under conveyances absolute in form, it was held as security for the debt. While it would have been possible for a conveyance from these trustees to Mrs. Wilkes to have passed the absolute title to the land, this legal result could not follow, except by some instrument executed by Schild, or some conduct upon his part making the act of conveyance his own act; such instrument or conduct evidencing an intent that she should hold title to the land under terms different from those under which it was held by her grantors. No instrument which could have been executed, and nothing which could have been done by Schild, could have destroyed the effect of the continuance of the debt, when, there being no other consideration, the land was conveyed by the creditor who held it as security, in consideration of the taking up of the debt for the benefit of the debtor. While it might have been possible for Schild to have parted with his equity of redemption to Mrs. Wilkes, by having conveyances made by the trustees in whom was the legal title to the land, the circumstances detailed by the bill absolutely negative such an intention and such a result.

The propositions made are applicable to the land secured from the sale by Ham, trustee.

[6] III, X, and XI. Appellees' third proposition is:

"Section 4783 of the Code of 1906, prohibits mortgages to be established by parol evidence."

Section 4783 of the Mississippi Code of 1906 is to this effect:

"A conveyance, or other writing, absolute on its face, where the maker parts with the possession of the property conveyed by it, shall not be proved, at the instance of any of the parties by parol evidence, to be a mortgage only, unless fraud in its procurement be the issue to be tried."

In the consideration of this section of the Code of Mississippi, a preliminary question might arise as to the power of a state to enact a law of evidence, or other law, which would have the effect of curtailing the jurisdiction of a federal court, or destroying or affecting the established remedies of such court. Nothing is more firmly established than the rights of courts of equity to declare instruments, absolute on their face, to be mortgages, and to receive parol evidence of the intent and purpose of the parties in the execution of such conveyances. To give effect to the provision of the Code cited would be to limit the remedy in federal courts to cases where fraud is charged, and to those in which the maker of the conveyance under consideration retained possession of the property. The application which we make of the facts in this case to the Mississippi statute will render it unnecessary to determine whether such an effect would be permissible.

Under the section of the Code quoted, a conveyance, absolute on its face, shall not be proved by parol to be a mortgage, unless the party making the conveyance retains the possession of the property, or unless fraud in its procurement be the issue to be tried. While the conveyances under which Mrs. Wilkes claims were made by the bank and Thomas, the president of the bank, and Ham, the trustee, it will

Digitized by Google

be assumed that, having been made for the benefit of Schild, delivery by him to Mrs. Wilkes of possession would be a parting contemplated by the statute. The allegations of the bill do not indicate delivery by him to Mrs. Wilkes. It is stated that the property described as the Lipsey place, and a few acres of the property described as the Bentwood place, and the houses located on lands in the town of Durant, and the property lying in St. Joseph county, Mich., are the only properties that are susceptible of actual occupancy, and that during the period of the confinement of Schild in the asylum his brother had control of the properties and attended to their renting and the collection of rentals therefrom. It is alleged that, when the titles were vested in Mrs. Wilkes, it was understood and agreed that Joel Schild should continue in charge of the renting, as the representative of William Schild. There is nothing in the bill to indicate that there was at that time any change in the occupancy of the property. The law would have reference to that date, and not to a subsequent date. There are allegations to the effect that afterwards Joel Schild was induced by Mrs. Wilkes to move on the Lipsey place for the purpose of terminating the general supervision of the properties; but it was stated that this moving was not intended as a surrender of the right of possession of William Schild. It also states that ever since the moving of Joel Schild to the Lipsey place he has been in occupancy and control thereof, and has supervised the various tenants thereon. Even if it could be said that possession of a part of the property was, at the time of the making of the conveyance, placed in Mrs. Wilkes, the failure to turn over all of it to her would prevent the application of the statute.

[7] The quoted section of the law of Mississippi does not, by its terms, have application to a case where fraud in the procurement of the conveyance is the issue to be tried. Under the proposition now considered, and also in the proposition made under subdivision XI of his brief, counsel for appellees question the sufficiency of the charges of fraud. It is stated that the charge of fraud in the procurement of the conveyance is "shifty," and it is said, quoting from a Mississippi case:

> "Where fraud is relied on as a basis of relief sought from a chancery court, the facts on which the charge is predicated must be specifically stated with full definiteness of detail."

It is settled that generalizations with reference to fraud will not be sufficient. The bill is not subject to the charge that it lacks in definiteness. The facts, from the proof of which fraud is to be inferred, and from which it is charged, are set forth with as great a degree of particularity as their character will permit. If the elements of fraud are simple, the pleading will not be held insufficient because complexity is not introduced into a statement of them. Not only is the fraudulent design charged, but there is a statement of how it was to be accomplished, and a statement of much of the evidence by which it is to be established. The following facts are specifically set forth: That Schild was an old man, who had had financial and family troubles, and who had just returned from an asylum for the insane; that im-

Digitized by Google

mediately after his return he was pressed by the Grenada Bank for the payment of a debt due to the bank; that, while he was undertaking to secure money with which to discharge the debt, Mrs. Wilkes, professing friendship for him, indicated a willingness to take up the debt due to the bank for the security held by the bank, provided she were permitted also to take up another debt secured by other property, and make all of the property responsible for all of the debts. It is charged that this proposition was made with the fraudulent intention of placing all of the property of Schild so that none of it could be used in discharging any part of his indebtedness, whereby all of the property of Schild might be secured. It is charged that, after securing conveyances to the property, she made excessive demands with reference to the amount of the indebtedness due upon the property, with the fraudulent intent to prevent its redemption. It is also charged that, when Schild undertook to sell the property, she discouraged the sales by promising to carry the debt until it was discharged by the rents and profits. When Schild secured purchasers for the land, she, according to the allegations of the bill, prevented the prospective purchasers from consummating the purchases.

[8] It has been held that a mere effort to prevent a conveyance, absolute in form, from having its true status as a mortgage fixed, is fraudulent. In this bill the fraud is charged throughout, and charged with sufficient definiteness and particularity. The entire discussion of article 4783 is, perhaps, unnecessary. There is nothing in that article which undertakes to regulate the manner of pleading. A number of the allegations of the bill are, according to the terms of the bill, to be established by instruments in writing; but this recital as to such allegations does not carry the inference that the others are to be proved by parol. The sufficiency of a bill is not to be determined by a consideration of whether the pleader will be able to establish his allegations.

[9] The exhibits to the petition indicate that the controlling allegations of the bill could be established by evidence in writing. Assuming that article 4783 has application, it would doubtless have the construction given to the provisions of the statute of frauds, and would not exclude all oral testimony in the trial of a case, when the controlling and essential features are established by written evidence. The letter of Mrs. Wilkes to the president of the bank, of date September 5, 1912, establishes that prior to the conveyance it was contemplated that the property would be taken over to secure payment of the sum there named. The status of the title to the lands in the name of the bank, and of Thomas, president of the bank, is indicated by writing. After the conveyance had been made, a memorandum, signed by Mrs. Wilkes, gives the indebtedness which she is claiming from Schild, and states:

> "This includes all indebtedness due to date on property deeded E. E. Wilkes by Grenada Bank and J. E. Ham, trustee, which we will deed on payment of above."

The only evidence that it would be necessary to introduce would be to show that Joel Schild, mentioned in the letter of Mrs. Wilkes, was

Digitized by Google

acting for his brother, and that the statement last referred to was delivered to Schild. Even if the article of the Mississippi statute is entirely applicable, the necessary oral testimony would properly be admitted.

[10] IV, VI, VII, VIII, IX, and X. By subdivisions 4, 6, 7, and 8 of the argument, certain other sections of the Mississippi statute of frauds are quoted, and undertaken to be applied to the facts of this case. It will again be sufficient to state that the ruling complained of in this case is the dismissal of the bill as upon a demurrer, and that there could be, on that account, no application of the rules of evidence by which the facts alleged were to be established.

If this were not true, however, the quoted sections would not prevent the introduction of parol testimony to establish the character of the conveyance, absolute in form, under which Mrs. Wilkes undertakes to hold. All of the rulings which have permitted courts of equity to accept parol evidence for the purpose of showing the character of the conveyance as a mortgage have been made in jurisdictions where statutory provisions in almost the exact form of the Misissippi statute of frauds have obtained. In substance, these rulings have been based upon the idea that the conveyance, absolute in form, is not upon "any contract for the sale of lands," or "the making of a lease thereof for a longer term than one year," or "upon agreement which is not to be performed in the space of a year" (section 4775), or the making of "an estate of inheritance or freehold for a term of more than one year" (section 2763). Section 4780 of the Mississippi Code, by its express terms, excludes its application to conveyances of the character here in question.

This observation disposes also of subdivisions 9 and 10 of the argument.

XII. Subdivision 12 of the argument is to the effect "the demurrer was properly taken and correctly sustained." This contention has, we trust, been answered.

Upon the allegations of the petition the plaintiff is entitled to have the conveyance declared a mortgage, to an accounting, and to the other relief asked, except the appointment of a receiver. It is alleged that there are a number of tracts of land which should be rented, and that a part of the property consists of timber lands, which require attention. It may be that the trial judge will find it advisable to appoint a receiver.

The judgment dismissing the bill is reversed.

Digitized by Google

(249 Fed. 718)

THE MASON.

THE CASCADE.

(Circuit Court of Appeals, Second Circuit. January 16, 1918.)

No. 95.

1. TOWAGE ⟹15(2)—GROUNDING OF TOW—EVIDENCE OF NEGLIGENCE.
   That tugs in moving in the daytime a vessel having at the time no motive power of her own, in harbor waters and in good weather, run her aground, warrants an inference of negligence on their part.
2. ADMIRALTY ⟹118—REVIEW ON APPEAL—FINDINGS OF FACT.
   When an admiralty court has rejected the positive testimony of witnesses who were in the best position to know exactly what the truth was as to some disputed fact and accepted the testimony of others whose opportunity to know the truth was manifestly not so good, and does this on the expressed ground that the testimony rejected does not harmonize with the inherent probabilities of the case, there is no reason why the appellate court should not review the testimony unembarrassed by the finding as to such facts.
3. ADMIRALTY ⟹73—SUIT FOR INJURY TO VESSEL—DAMAGES—BURDEN OF PROOF.
   The party found in fault upon the merits in a suit for injury to a vessel, although otherwise than in collision, must bear whatever inconvenience of hardship there may be in proving the exact amount of damages sustained.
4. ADMIRALTY ⟹73—SUIT FOR STRANDING OF TOW—DAMAGES—EXPERT TESTIMONY—DOCUMENTS.
   In cases of stranding, damage is commonly received in places where no eye can see that which happens at the time of harm, and the best evidence as to what was injured, and often excellent and persuasive evidence as to how the injury occurred, is that of competent and experienced men who subsequently examine the hurt, and on these issues not only the oral testimony of marine surveyors, but their reports or surveys, as documentary evidence are admissible.
5. TOWAGE ⟹15(2)—SUIT FOR STRANDING OF TOW—DAMAGES—EVIDENCE.
   When a vessel takes the ground, loaded, and lies there for a week, and is then found to have an injured plate, or places showing recently made breaks or deflections from the normal, this is enough to establish an apparent causal connection between the stranding and the injury to the plates, and any other cause for the injury, admittedly existing, is by all experience the unusual cause, and a claim that the injury was due to such cause should be sustained by convincing evidence.

Appeal from the District Court of the United States for the Western District of New York.

Suit in admiralty by the Kinsman Transit Company, owner of the steamer Mathew Andrews, against the steam tugs Mason and Cascade; the Hand & Johnson Tow Line, claimant. From the decree, both parties appeal. Claimant's appeal dismissed, and libelant's appeal sustained, with directions to modify decree.

See, also, 221 Fed. 799.

Libelant's steamboat Mathew Andrews had lain up in Buffalo Harbor during the winter of 1908–09. On March 13, 1909, the tugs above named were employed to remove her from her anchorage to a loading berth. In so doing, within harbor limits and during good weather, they ran her aground, and it

Digitized by Google

required salving operations extending over about a week to release her. This action was brought to recover the damage and expense resulting from this stranding. The court below held the tugs liable and sent the assessment of damages to a commissioner. Claimants did not deny that some damage had been received, and especially that the Andrews had struck something that broke one of her propeller blades, although she was not under her own steam when the tugs stranded her. She was loaded, having had a "storage cargo of grain" in her hold during the winter.

It appeared that in 1907 the steamboat had taken the ground and received certain injuries to her bottom, which had been repaired or patched by cement on the inside of the plating. It was proven that she had not subsequently grounded to the knowledge of her owners until March, 1909, and under the circumstances above stated. Very shortly after the stranding, three marine surveyors examined the Andrews, made their reports in the usual form, stating that she had suffered damage by stranding additional to that received in 1907, and patched with cement as above set forth. All of these surveyors testified to their examination, the truthfulness of their reports, and gave their reasons for being able to distinguish between old damage (i. e. that of 1907) and recent injury to the plating of a steel vessel. The test used by them was substantially the difference in color between cracks, indentations, or corrugations that showed dark or chocolate colored and those bright and showing metal newly exposed.

Claimants contended that the place where the Andrews had taken the ground showed a soft or sandy bottom, but that she had spent the winter at an anchorage where she might have taken the ground under some conditions of the wind and where the bottom would have been more likely to injure her than the sand or mud forming the major portion at all events of the bottom at the place of stranding.

The commissioner's report, based upon a reading of depositions (so far as the surveyors were concerned), was that libelant had not "clearly shown" that the bottom damage claimed for was attributable to the stranding of 1909. He regarded the surveyors' testimony as "speculative" and an "arbitrary conclusion," for "it was not thought that the beaching of the boat at the entrance of the Buffalo Harbor on a mud bank produced any of the injuries to the bottom of the boat claimed herein." Accordingly, bottom injury, the cost of repairing which was $1,003, and the attendant cost of drydocking, were disallowed, and the commissioner's report was confirmed by the District Judge. From final decree accordingly claimants appealed on the merits, and libelant in respect of the disallowance of said bottom damage and drydocking.

Harvey L. Brown, of Buffalo, N. Y. (Laurence E. Coffey, of Buffalo, N. Y., of counsel), for claimant.

Duncan & Mount, of New York City (Oscar Dibble Duncan and Warner C. Pyne, both of New York City, of counsel), for libelant.

Before ROGERS and HOUGH, Circuit Judges, and LEARNED HAND, District Judge.

HOUGH, Circuit Judge (after stating the facts as above). [1] The appeal of claimant presents no question of law. It is asserted, and at once admitted, that the tugs were liable only for the absence of ordinary care and skill. Such absence was found below because, in good weather and harbor waters, the tugs in broad daylight put aground a vessel having at the time no motive power of her own, and completely under the control of the tugs. When these facts were shown claimant gave no evidence. If negligence is not inferable from such circumstances, it is difficult to imagine anything that could justify the conclusion short of a proven intent to injure another's property.

Digitized by Google

Libelant's appeal also raises questions of fact, but further requires consideration of the competency and weight of a kind of testimony commonest in the admiralty and not always easy to appraise at its proper value; viz., the expert evidence of marine surveyors.

On assessment of damages herein, whether the vessel was injured, or injured by the fault of claimant's tugs, were points settled by the interlocutory decree; the questions were only how much she had been injured, and what it had cost to repair such injury.

The single issue, framed by discussion rather than pleading, was whether the damage to one particular part of the Andrews' bottom was caused by the stranding of March, 1909; the cost of repair was practically not denied.

That an injury existed after that stranding was also admitted; but that it resulted from resting on the bottom of Buffalo Harbor in March, 1909, rather than at some other time or in some other place, was held not proven.

It was amply shown that the newly injured portion of the Andrews did rest on the ground at the time mentioned; and, also proved that whatever the general nature of the bottom at the place in question, there was something there hard enough to break a propeller that was not turning over.

This was positive evidence; but there was no direct evidence at all that, while the Andrews lay at her winter anchorage, she was ever aground. The argument was that from the reading of the water gauge kept somewhere in Buffalo Harbor, as compared with the draft of the Andrews, she must have been aground at least on a day in February, 1909. Considering the records in evidence, we do not think they establish the allegation or suggestion.

[2] This is a situation for applying our ruling in The Albany, 81 Fed. at 968, 27 C. C. A. 28, viz.:

> Though a finding of fact made below will not ordinarily be disturbed especially when the lower court heard and saw witnesses, yet when that court "has rejected the positive testimony of witnesses who were in the best position to know exactly what the truth was as to some disputed fact, and accepted the testimony of others whose opportunity to know the truth was manifestly not as good, and does this on the expressed ground that the testimony rejected does not harmonize * * * with the inherent probabilities of the case, there is no reason why the appellate court should not review the testimony unembarrassed by the finding as to such facts."

In this case, as stated, the evidence of the marine surveyors was taken by deposition.

[3] It is assuredly a settled general rule, though oftenest applied in collision, that a fault in one party, once firmly established, casts upon that party the burden of showing any contributing fault committed by his opponent. The Persian, 224 Fed. 441, 140 C. C. A. 135. The analogue of this rule is applicable to matters of damage, wherefore as was stated in The Mayflower, 1 Brown, Adm. 376, Fed. Cas. No. 9345, affirmed as The Dove, 91 U. S. 381, 23 L. Ed. 354, the party in fault upon the merits of the case must bear whatever inconvenience or hardship there may be in proving the exact amount of damages sustained; and, if the party not in fault "derives incidentally

Digitized by Google

a greater benefit than mere indemnification, it arises only from the impossibility of otherwise affecting such indemnification without exposing him to some loss or burden which the law will not place upon him."[1]

[4] In cases of stranding, damage is commonly received in places where no eye can see that which happens at the time of harm, and in the nature of things the best evidence as to what was injured, and often excellent and persuasive evidence as to how the injury occurred, is given and must be given by competent and experienced men who subsequently examine the hurt. This being common knowledge among those accustomed to maritime affairs, it has long been the practice to admit as evidence, not only the oral testimony of marine surveyors, but their reports or surveys as documentary evidence. As it was put by Judge Addison Brown in The City of Chester (D. C.) 34 Fed. 429:

"The surveys in this case were, as I understand, the usual surveys which were a necessary preliminary toward making the repairs, and should therefore be allowed."

When it comes to questions of amount, often most bitterly contested, it is settled that expert evidence (and such is the nature of a surveyor's testimony) may be used to impeach actual expenditures by showing that they were carelessly, extravagantly, or even dishonestly incurred. Of this The Umbria (D. C.) 148 Fed. at 283, affirmed in this court 153 Fed. 851, 53 C. C. A. 33, is a good instance. The testimony of a surveyor or other maritime expert is often regarded as an admission by one party or the other, when both sides of a controversy appoint surveyors to consider the nature and amount of damage. Such surveys are always evidence, though not conclusive. The Elmer A. Keeler, 194 Fed. at 341, 114 C. C. A. 331.

Post hoc, ergo propter hoc, is often poor reasoning; but it has some value, and the process of apportioning evidential difficulties must be conducted in the light of experience and common sense.

[5] When a vessel takes the ground, loaded, and lies there for a week, and is then found to have an injured plate or places showing recently made breaks or deflections from the normal, this is enough to establish an apparent casual connection between the act of stranding and the injury to the plating. See The Vigilant (D. C.) 10 Fed. at 766. Any other cause for the injury admittedly existing is by all experience the unusual cause, and a claim of an unusual kind "ought to be sustained by evidence correspondingly convincing." Per Brown, D. J., in The Grapeshot (D. C.) 42 Fed. at 505. See, also, The Margaret J. Sanford (C. C.) 37 Fed. at 152, per Wallace, J.

For these reasons, we are (1) required to consider the evidence on the reference in full; and, having done so, are obliged to hold (2) that libelant has given competent and persuasive evidence that the damage in question was occasioned by the stranding of March 1909; (3) that claimants have not shown any other even probable cause for

[1] This language was taken by Longyear, J., from Dr. Lushington's judgment in The Gazelle, 2 W. Rob. at 284.

Digitized by Google

said damage; and (4) that the testimony of the marine surveyors was neither "arbitrary," nor "speculative."

The libelant's appeal is sustained, and that of claimant dismissed, with one bill of costs to libelant. The cause is remanded with directions to modify the decree in conformity with this opinion; libelant to have interest on the damages as increased.

(249 Fed. 722)

MUNSON S. S. LINE v. GRIMWOOD et al.

(Circuit Court of Appeals, Second Circuit. January 16, 1918.)

No. 89.

1. SHIPPING ⟹108—BREACH OF CONTRACT—TONNAGE FOR CARRIAGE OF COAL—DAMAGE.

Plaintiff firm was a dealer in coal at Mexican ports, and prior to 1912 had made shipments on vessels of defendant steamship company. At that time the parties entered into a contract by which defendant, for a term of three years from January 1, 1913, agreed to furnish vessels for carrying all the coal shipped by plaintiff, which was to be sent from certain ports of the United States at specified rates of freight. Shipments were made during the first part of 1913, when, owing to the unsettled political and business conditions in Mexico, plaintiff ceased further shipments and suspended its business, except for the sale of coal on hand. In 1915 plaintiff demanded five ships under the contract, which were refused. It made no effort to obtain transportation by other vessels and practically abandoned further shipments. *Held*, in an action for breach of the contract, that an instruction that plaintiff was entitled to recover as damages the difference between the contract rate and the current rate of freight was erroneous; that, assuming the validity of the contract, in the absence of evidence of loss in plaintiff's business, resulting from its breach, and the amount of such loss, there was no basis for the recovery of substantial damages.

2. CONTRACTS ⟹175(1)—CONSTRUCTION—PREVIOUS COURSE OF BUSINESS.

It is presumed that, in making such contract, the parties contracted with reference to the quantity of coal reasonably required by plaintiff to carry on its established business.

In Error to the District Court of the United States for the Southern District of New York.

Action at law by Adolfo Grimwood and Fernando Cavallo, copartners doing business as A. Grimwood & Co., against the Munson Steamship Line. Judgment for plaintiffs, and defendant brings error. Reversed.

The defendants in error (hereinafter called Grimwood) had for a number of years before 1912 an established coal business in Vera Cruz, and perhaps other Mexican ports. They evidently had dealt with plaintiff in error (a steamship company, hereinafter called Munson) for some time before 1912, by obtaining transportation for American coal to Mexico. At the trial, Grimwood attempted to show the history of his relations and the extent of his dealings with Munson prior to the date of written contract sued on (July, 1912), but was prevented by the court. At the time just stated, the parties hereto made an agreement, of which the following is the important part: "[Munson] agrees to receive and transport by steamers, and [Grimwood] agrees to furnish for shipment from Baltimore, Md., Newport News, Norfolk, or Sewell's Point, Va., to Vera Cruz, Tampico, or Puerto Mexico, Mexico, all

---

⟹For other cases see same topic & KEY-NUMBER in all Key-Numbered Digests & Indexes

Digitized by Google

of the coal and coke shipped by [Grimwood] from January 1, 1913, to December 31, 1915, for any of the voyages mentioned above; it being understood that [Grimwood] is not to ship coal or coke from any other United States port outside of Baltimore, Md., Newport News, Norfolk, or Sewell's Point, Va., to Vera Cruz, Tampico, or Puerto Mexico during the period mentioned above." Steamers were to be supplied on 10 days' notice, were not to exceed 5,000 tons coal cargo capacity, ports of loading and discharge were to be designated, and, if Grimwood called for more than 4,000 tons to be carried at one time, Munson could supply two steamers in response thereto. Freight rates were specified, which varied with the port of destination, and the number and capacity of the ships furnished.

Grimwood shipped some coal by Munson's steamers between January and June, 1913. By that time the political and business conditions in Mexico were such that he deemed it best, as he said, to ship no more, and "peddle out" what he then had at Vera Cruz, about 12,000 tons. He remained of this mind until March, 1915, when he notified Munson that he "required a steamer to load at Baltimore for Vera Cruz," not stating any intended tonnage. Munson refused to furnish one. Nothing further was done until November, 1915, when the United States recognized Carranza as "first chief" of a de facto government in Mexico, and Grimwood (as he says) felt that it was time to send more coal, wherefore he demanded four steamers, each to carry "approximately 4,000 to 5,000 tons," and to be ready to load at divers times specified, but all before December 31, 1915, the expiration date of contract. Munson again refused, and this action was begun in February, 1916, alleging large, but not specifically described, damages for breach of the contract of 1912; i. e., for refusal to furnish tonnage in 1915.

It appeared on the trial that Grimwood had made no effort to get transportation by any other vessels, that he had sent no coal whatever to Mexico after Munson's refusals, except some from Alabama by rail, much of which had been seized in transit by some alleged governmental Mexican authority, after which experience he had abandoned the effort. There was no evidence of any sales or attempted sales of coal by Grimwood in Mexico in 1915, other than the "peddling" aforesaid; but there was testimony of high and advancing prices for coal in Vera Cruz at that time, and of great advances in freight rates for water carriage after the outbreak of the European War in 1914.

The answer of Munson pleaded, in effect, that the so-called contract was invalid, and no contract in law, and had been abandoned by Grimwood. At the close of plaintiff's case, motion was duly made to dismiss, because there was no proof of damages, and such motion was repeated when both parties rested. The court, however, held as matter of law that the contract was valid, left the defense of abandonment to the jury, and instructed them that plaintiff's measure of damages, if in good faith he intended to ship the large quantities of coal, for which he demanded tonnage, was the difference between the contract freight on five shipments, of 4,000 tons each, and current freight on the same quantities at the times of the above stated demands, together with interest from the demand dates.

The jury returned a verdict for Grimwood for $45,000 and interest. To the judgment thereon Munson took this writ.

Kirlin, Woolsey & Hickox, of New York City (J. Parker Kirlin, John M. Woolsey, and Harry D. Thirkield, all of New York City, of counsel), for plaintiff in error.

Kellogg, Emery & Cuthell, of New York City (Frederick R. Kellogg, and Earle L. Beatty, both of New York City, of counsel), for defendants in error.

Before WARD, ROGERS, and HOUGH, Circuit Judges.

HOUGH, Circuit Judge (after stating the facts as above). [1] This cause was submitted to the jury under a theory of damages so

Digitized by Google

unsuited to the facts developed by the evidence that a new trial is necessary. Damages are either compensatory or punitive; in this action on contract the latter may be disregarded; so that this plaintiff is necessarily represented by the jury's action as having been compensated by this verdict for some loss or injury. This is a result imposed by law, which also forbids any verdict for more than nominal damages, when there is no lawfully proven pecuniary loss for which to award compensation.

The substance of the argument in support of the judgment below, is that the parties were dealing in a commodity; i. e., tonnage. Grimwood was entitled to get it from Munson, who unlawfully refused the demand; therefore Grimwood was properly awarded the difference between what he had agreed to pay Munson for it, and what it would have cost to get it elsewhere at the time of demand, irrespective of whether he got it or not, provided only he made the demand in good faith—i. e., apparently with a real intent to ship coal.

Tonnage is in a sense a commodity; so are railway and theater tickets, and many other things, which may or may not be directly productive of losses. If one buys tickets or tonnage to sell again, the profit or loss in such dealings is computable as if coal or grain or any other objects commonly bought and sold were the subject of bargain. But ordinarily the right of carriage or admission is an incident or preliminary to gain from that which is transported, or intellectual pleasure from that which may be seen or heard.

In this case, if Grimwood had actually sent coal to Mexico at an expense greater than Munson's price, there would have existed an actual expense, actually incurred, and requiring compensation on a familiar basis, without any regard to the ultimate fate of such Mexican coal venture. But this contract was (if valid at all, and by the very argument on its behalf) to supply the requirements of Grimwood's established business in respect of getting, for purposes of sale, American coal into Mexico; that is, what tonnage he could demand depended on the requirements, and the reasonable requirements, of an actual business. It did not depend on how much tonnage Grimwood wanted to take a risk on. For all that this record shows, instead of demanding four ships in November, 1915, 40 might have been called for.

Still less was it within the contemplation of the parties that Grimwood, without any proof of business destroyed by Munson's refusal, should collect as his damages for not getting coal, any part of the sums he did not pay for transportation. We assume that there was a real desire to send 20,000 tons of coal in one month to a market and a business that had not absorbed over 12,000 tons in two years; but there was no proof at all that such a procedure was a reasonable requirement for the business, either at the time when demand made, or at the date of contract. The relations between the parties as evidenced by the contract, and regarding that agreement as a "requirement" contract, were such that tonnage was for them not a commodity, like coal, but a service. Damages did not and could not flow directly from a refusal to transport coal, but only from the effect of such re-

Digitized by Google

fusal on the business of selling coal, and Grimwood's particular business of that nature.

It is quite possible that, during Mexico's period of especial anarchy, Grimwood had kept together a business of sorts, equally possible that what he had was ruined, or its rehabilitation prevented, by not getting coal in November and December, 1915; yet it is also not only possible, but on this record apparent, that he has been awarded a very large sum of money, not because he showed any loss, but solely because he was willing to risk some shipments to a region of which the business capabilities in 1915 are not shown at all. He has paid out nothing, and been rewarded for abandoning a risk; this is mere gambling. Loss in the business with reference to which the parties contracted must be shown. How that can or will be done cannot now be laid down. It depends on evidence not yet adduced; but there must be shown a loss in Mexico. The present verdict represents nothing but an absolutely unearned profit for not sending coal to that distracted country.

[2] The fundamental question in this case, whether the writing of July, 1912, is a "requirement" contract, or an unenforceable and illegal promise to obey the will or whim of Grimwood, we cannot decide on this record, with fairness to plaintiff below. As stated above, he was prevented from showing dealings with Munson before 1912; we do not know whether by such evidence the quantity of tonnage needed can be reasonably ascertained. It is presumed that "the intention of the parties, was to contract in reference to such quantity." This quotation is from our decision in Manhattan, etc., Co. v. Richardson, etc., Co., 113 Fed. 923, 51 C. C. A. 553, a case which as far as it goes still represents our views on this subject; whether it will cover this case, when presented by proper evidence, we cannot tell.

We may add, however, that, had no offer to show the extent and nature of Munson's previous knowledge of Grimwood's requirements been made, and the trial court had held the contract a "will, wish, or want" agreement, we should have agreed with such ruling on the Manhattan Case, supra, and the judgment of Sanborn, J., in Coldblast, etc., Co. v. Kansas City, etc., Co., 114 Fed. 77, 52 C. C. A. 25, 57 L. R. A. 696, which fully and ably covers the subject, so far as it can be divorced from facts peculiar to each transaction.

In so far as the language of decision in Ramey, etc., Co. v. Schroeder, etc., Co., 237 Fed. 39, 150 C. C. A. 241, seems to assert that an agreement otherwise void, as depending for effect on the will, wish, want, or whim of one party, is validated merely by the promise of such party to abstain from dealing in respect of the subject in hand, with any person other than the second party, we are compelled to think it inadvertently used, and to disagree.

Judgment reversed, and new trial awarded.

Digitized by Google

(249 Fed. 726)

RENSSELAER & S. R. CO. v. IRWIN, Collector of Internal Revenue.

(Circuit Court of Appeals, Second Circuit. January 16, 1918.)

No. 70.

1. NOVATION ⟹5—WHAT CONSTITUTES.

A "novation" is a substitution of one debtor in place of another; the old debt being extinguished.

[Ed. Note.—For other definitions, see Words and Phrases, First and Second Series, Novation.]

2. INTERNAL REVENUE ⟹7—INCOME TAXES—"INCOME."

Income Tax Act Oct. 3, 1913, c. 16, § 2, G(a), 38 Stat. 172, declares that the normal tax hereinbefore imposed upon individuals shall likewise be levied upon the entire net income arising or accruing from all sources during the preceding year to every corporation. Long prior to the passage of the act, plaintiff railroad company had leased its line to a second company, which agreed to pay the interest upon bonds issued by plaintiff, and to pay direct to each stockholder dividends at the rate of 8 per cent. per annum. Under the agreement, plaintiff received $1,000 yearly from the lessee to enable it to maintain its corporate existence. *Held*, in view of the fact that the agreement provided that the lessee should not pay any income tax that might thereafter be imposed on the dividends and interest, and that, if required by law to pay the same, it might deduct the amount from such interest and dividends, the dividends paid direct to the stockholders as rent must be treated as corporate "income" subject to taxation, for the provision for payment directly by the lessee was a mere labor-saving device.

[Ed. Note.—For other definitions, see Words and Phrases, First and Second Series, Income.]

3. INTERNAL REVENUE ⟹7—INCOME TAXES—LIABILITY.

A corporation is liable under Income Tax Act Oct. 3, 1913, § 2, G(a), imposing taxes on corporate income arising or accruing from all sources, even though it was not engaged in business and derived all its income as rent from its property.

Hough, Circuit Judge, dissenting.

In Error to the District Court of the United States for the Northern District of New York.

Complaint by the Rensselaer & Saratoga Railroad Company against Roscoe Irwin, as Collector of Internal Revenue. A demurrer to the complaint was sustained (239 Fed. 739), and plaintiff brings error. Affirmed.

G. B. Wellington, of Troy, N. Y., for plaintiff in error.

D. B. Lucey, U. S. Atty., of Ogdensburg, N. Y., for defendant in error.

Before WARD, ROGERS, and HOUGH, Circuit Judges.

WARD, Circuit Judge. This is a writ of error to a judgment dismissing the complaint on demurrer. The action is to recover taxes paid under protest by the plaintiff to the defendant as collector of internal revenue of the Fourteenth district of the state of New York assessed upon its income for the years 1913 and 1914 under section

Digitized by Google

2, G(a), of the Act of October 3, 1913 (38 Stat. 172, c. 16), which reads:

"The normal tax hereinbefore imposed upon individuals likewise shall be levied, assessed, and paid annually upon the entire net income arising or accruing from all sources during the preceding calendar year to every corporation, joint-stock company or association, and every insurance company, organized in the United States, no matter how created or organized, not including partnerships. * * *"

[1, 2] May 1, 1871, the plaintiff leased its railroad, equipment, and franchises for the term of its charter of 500 years and of any extension thereof to the Delaware & Hudson Canal Company, in consideration whereof the lessee agreed to pay an annual rent as follows: The interest on $1,625,000 of mortgage bonds made, guaranteed or assumed by the lessor; the interest and $5,000 annually on account of the principal of the lessor's bond to the city of Troy on account of the Troy Union Railroad Company; the interest on $375,000 of 7 per cent. bonds to be issued by the lessor, payment of interest guaranteed by the lessee; a dividend of 4 per cent., payable semiannually, on the lessor's capital stock; and the rents accruing and to become due on certain leases to which the lessor was a party. The lessee further agreed to stamp upon the lessor's bonds and stock on presentation a guaranty of payment of the interest and dividends aforesaid to the owners and holders. Every share of the plaintiff's stock is so stamped. It was, however, expressly provided that the lessee was not to pay the then income tax or any income tax that might thereafter be imposed on the said dividends and interest, and that, if required by law to pay the same, it might deduct the amount of tax so paid from the said interest and dividends.

The lessor covenanted to continue its corporate organization at the expense of the lessee, not exceeding $1,000 annually, and to co-operate with the lessee as far as legal and practicable to make the lease perpetual. The lessee from 1871 down to the present time has continued to be in possession of the lessor's properties and franchises, has operated and maintained the road, and has kept transfer books of the lessor's bonds and stocks.

The plaintiff contends that it has no other income than the $1,000 paid it annually by the lessee as expense of keeping up its corporate organization and an income from other sources amounting to $3,600 annually, and that the moneys paid as rent to the holders of its bonds and stocks is their income. On the other hand, the defendant contends that the rent, though so paid, is as matter of law income of the plaintiff. Judge Ray took the latter view, sustained the demurrer, and dismissed the complaint. We entirely concur with him.

It is true that the rent of its road does not go into the plaintiff's treasury and that it has no means of withholding the tax from it. It is also true that the rent reserved by the lease is paid by the lessee in fixed sums to third parties. All the same, the rent is the property of the plaintiff, and remains such, though by the terms of the lease paid out to others, whose rights are derived through it. While the rent is a debt of the lessee to the lessor, it is, as between the lessor and

Digitized by Google

its stockholders, the lessor's income, out of which the dividends, if any, are to be paid.

The application of the rent under the lease is a mere labor-saving device, the effect being exactly the same as if it be paid to the lessor and by it paid out as far as necessary to bondholders for interest, and the surplus in dividends to its stockholders. The description of the fixed sum to be paid by the lessee of 8 per cent. to the lessor's stockholders as a dividend shows that the payment is made as agent of the lessor.

To speak of the lease as a novation is a misuse of language. A novation is a substitution of one debtor in place of another, the old debt being extinguished. 29 Cyc. 1130. The lessee's guaranty of the payment of interest on the lessor's bonds does not substitute the lessee as debtor for the lessor, not extinguish the old debt by releasing the lessor from liability to the holders. It is merely an additional security likely to increase the market value of the bonds. Between the stockholders and the lessor, the relation of debtor and creditor does not exist, so that no question of the substitution of the lessee as debtor for the lessor can arise. The stockholders do not cease to be stockholders of the lessor because the lessee has agreed to pay them 8 per cent. per annum on their stock as a dividend. As we said in Anderson v. Morris & Essex R. R., 216 Fed. 83, at page 90, 132 C. C. A. 327, 334:

> "But, to make the act applicable, the lessor company must not alone exist 'under the laws' of the state which created it. It must, in addition, have a net income over and above $5,000, etc. It is said the lessor company does not meet that requirement of the law, as no money was paid to it; the rentals having been paid, not to it, but to its stockholders and bondholders. The notion that a corporation is an artificial entity distinct from the members who compose it is a fiction of the law, which the courts recognize for some purposes and disregard for others. Without going into the matter at length, it suffices to say that the fact that the lessee paid the rent, not to the corporate entity, but to the stockholders and bondholders, cannot prevent the act from applying to the money so paid, if the other conditions of the act make its terms applicable. The fiction referred to cannot be permitted to accomplish a fraud upon the statute and an evasion of its obligations."

[3] The fact that the plaintiff is not engaged in business which, as we held in that case, would be conclusive against the liability for income tax under the act of August 5, 1909 (36 Stat. 11, c. 6), is wholly immaterial under the act of 1913, which taxes income "arising or accruing from all sources." We are not concerned with the questions how the plaintiff can pay the tax or how the government is going to collect it.

Decree affirmed.

HOUGH, Circuit Judge (dissenting). It seems certain that what is taxed is the income of the persons against whom assessment is made, not that of some one else. Nor is any peculiar signification given to the word "income," which ordinarily means "money, and not the expectation of receiving it, or the right to receive it at a future time." United States v. Schillinger, 14 Blatchf. 71, Fed. Cas. No. 16,228.

Digitized by Google

This plaintiff certainly never received this money, nor had it any right so to do, for by the terms of the lease the so-called "dividends" shall be paid direct to the shareholders. That is the shareholders' right, not at all a privilege of the plaintiff, nor a "mere labor-saving device." The test is: Would a payment by the Delaware & Hudson to the Rensselaer & Saratoga discharge the former's obligation or liability to the individual shareholders? It seems to me that reading the lease requires a negative answer.

The truth is "dividends" is an inappropriate and misleading word, for these recurring payments bear no relation to earnings, and are debts of the Delaware & Hudson to the shareholders severally, who own said debts as they arise or accrue, who could sue for them, and against whom the tax should be laid or assessed.

The quotation relied on from Anderson v. Morris & Essex R. R., supra, was not necessary to the decision of that case, and as obiter, is not an adjudication. As applied to the statute now under consideration, it produces this result, namely: That income arises or accrues to a person, though he has it not in possession, and does not even own the right to sue for and recover it.

On these grounds I dissent.

(249 Fed. 729)

WILSON & WILLARD MFG. CO. v. UNION TOOL CO. et al.

(Circuit Court of Appeals, Ninth Circuit. February 11, 1918. Rehearing Denied May 13, 1918.)

No. 2996.

1. PATENTS ⟹328—VALIDITY AND INFRINGEMENT—UNDERREAMER.
   The Double patent, No. 734,833, for an underreamer, is for a combination of old elements, must be limited to the device shown and described, and is not entitled to a broad range of equivalents. As so construed, *held* not infringed.

2. PATENTS ⟹246—INFRINGEMENT—COMBINATION OF OLD ELEMENTS.
   While a combination of elements, all of which are old in the art, may be invention, the combination must be considered as a unitary structure; and, if a defendant omits one or more of the material elements, he does not infringe.

3. PATENTS ⟹241 — INFRINGEMENT — MECHANICAL STRUCTURES — "EQUIVALENT."
   To make one mechanical device the "equivalent" of another, so as to establish infringement, it must appear, not only that it produces the same effect, but that such effect is produced substantially by the same mode of operation.
   [Ed. Note.—For other definitions, see Words and Phrases, First and Second Series, Equivalent.]

4. PATENTS ⟹165—RULES OF CONSTRUCTION.
   A patent is no broader than its claims; and, if the language of the claims is clear and distinct, the patentee is bound thereby.

⟹For other cases see same topic & KEY-NUMBER in all Key-Numbered Digests & Indexes

Digitized by Google

Appeal from the District Court of the United States for the Southern Division of the Southern District of California; Edward E. Cushman, Judge.

Suit in equity by the Union Tool Company, Edward Double, Rosa Eichenhofer, as administratrix of the estate of Frederick Eichenhofer, deceased, and George Chadderdon, against the Wilson & Willard Manufacturing Company. Decree for complainants, and defendant appeals. Reversed.

For opinion below, see 237 Fed. 837.

Raymond Ives Blakeslee, of Los Angeles, Cal., for appellant.

Frederick S. Lyon, of Los Angeles, Cal., for appellees.

Before GILBERT, ROSS, and HUNT, Circuit Judges.

HUNT, Circuit Judge. On appeal by the Wilson & Willard Manufacturing Company from a decree in favor of the Union Tool Company finding the Double patent No. 734,833, issued in 1903, valid and infringed as to claims 1, 2, 6, 7, and 8. Injunction and accounting were ordered. Wilson v. Union Tool Co. (D. C.) 237 Fed. 837. As will be seen by an examination of Union Tool Company v. E. C. Wilson, 249 Fed. 736, 161 C. C. A. 646, No. 2918, decided this day, the patent has to do with an underreamer for drilling oil wells.

[1] The District Court found that the Double underreamer took the lead in oil well tool trading over all former underreamers. and in deciding the case treated the main question involved as pertaining to what range of equivalents complainant was entitled to under the patent in suit, and held that the Double underreamer constituted combinations of decided merit, which entitled complainants to a fair range of equivalents. The claims involved are as follows:

(1) "An underreamer comprising a hollow mandrel furnished with an internal shoulder, a downward extension having opposite parallel bearing faces having a keyway therein, shoulders at the sides of such extension, and upwardly and inwardly sloping dovetail slipways beneath said shoulders; a spring on the shoulder in the hollow mandrel; a rod playing in the mandrel, furnished with a key seat and supported by the spring; dovetail tilt slips playing in the slipways and furnished with key seats, respectively; a key in the key seats of the slips and rod, and playing in the keyway of such extension, to hold the slips against the shoulders; said slips being furnished with inward projections to slide upon the downward extension of the mandrel to spread apart the cutting edges of the slips when the slips are drawn up."

(2) "An underreamer furnished with a mandrel having a downward extension provided with opposite parallel bearing faces and a keyway in the extension; a spring-supported rod furnished with a key seat and playing up and down in the mandrel; tilt slips slidingly connected with the mandrel and furnished with inward projections to slide upon the opposite bearing faces of the downward extension to spread the slips apart at the lower ends when the slips are drawn up; and a key carried by the rod and carrying the slips."

(6) "In an underreamer, a mandrel furnished with a hollow slotted extension, the lower end of which slopes upward at the edges; tilt slips slidingly connected with the mandrel and furnished on their inner faces with projections, the upper faces of which slope downward to slide upon the extension of the mandrel; and means connecting the slips with the rod."

(7) "In an underreamer, the combination with a hollow mandrel, provided with a slotted extension, a spring-actuated slip-operating rod provided with

Digitized by Google

a pivot key, tilt slips provided with key seats adapted to be engaged by said pivot key, said key seats being somewhat larger than the key to allow the slips to tilt, said slips provided with inwardly projecting shoulders, and said slotted extension provided with surfaces adapted to tilt said slips and hold the same in expanded position."

(8) "In an underreamer, the combination of a hollow mandrel with a hollow slotted extension, said extension having opposite parallel bearing faces, a slip-carrying rod in said mandrel, slips connected to said rod, said slips having projections which bear against said extension, said slips being provided with key seats, a key carried by said rod, each end of the key lying in a key seat of a slip, and the key seat in each slip being somewhat larger than the key to allow the slips to partake of a tilting action."

The finding of the District Court was that "the chief novel feature of the Double invention was the tilting means adapted for the collapsion and expansion of the cutters in combination with interrelated dovetails on the cutters and ways of the body extension," and that there was no anticipation. The errors assigned are based on these several contentions: That the Wilson underreamer does not include the fundamental elements of the Double underreamer, namely, the "hollow slotted extension" with opposite parallel bearing faces with upwardly and inwardly inclined dovetailed ways; that the Double underreamer was but a transitory step in the art; that the Double underreamer was, in effect, abandoned by the predecessors of the appellee because of the success of the Wilson underreamer; that Double, the patentee of the patent in suit, was not the original and independent inventor of the combination claimed in the patent in suit; that the finding of the court that the essence of the Double invention was the open dovetailed slipways with dovetail cutters, coacting therewith, and means for expanding the cutters and to cause them to tilt on the suspension means, was error.

[2] It is clear that all of the elements of the Double combination patent, No. 734,833, were old in the art. This being true, the claims of invention in the patent should be limited to the specific combinations of elements as covered in the claims of the patent. Combination of elements which are old in the art undoubtedly may be invention, but the combination must be considered as an entirety or unitary structure. If defendant omits one or more of the material elements which make up the combination, he no longer uses the combination; and it is no answer to say that the omitted elements are not essential, and that the combination operates as well without as with them. Leeds & Catlin v. Victor Talking Machine Co., 213 U. S. 301, 29 Sup. Ct. 495, 53 L. Ed. 805; Evans et al. v. Hall Printing Press Co., 223 Fed. 539, 139 C. C. A. 129. It must also be established by one who alleges infringement of a combination that the entire combination, as a unitary structure and having substantially the same mode of operation, is present in the alleged infringing machine. Owens v. Twin City Separator Co., 168 Fed. 259, 93 C. C. A. 561.

[3] To make one mechanical device the equivalent of another, it must appear, not only that it produces the same effect, but that such effect is produced by substantially the same mode of operation. Has the Union Tool Company, appellee, shown that the underreamer de-

Digitized by Google

vice involved is a combination of the same elements as the Wilson device, and that their mode of operation is substantially the same? Western Engineering Co. v. Risdon Iron & Locomotive Works, 174 Fed. 224, 98 C. C. A. 132. In the Double combination there is a hollow mandrel with inner shoulder, a downward extension with a shoulder at the side of the extension, a spring on the shoulder in the hollow mandrel, a rod playing in the mandrel supported by a spring, and a key at the lower end of the rod to carry the cutters. All of these elements were old in the art; but it is to be reiterated the court found that the chief novel feature of the invention was the tilting means adapted for the collapsion and expansion of the cutters, in combining that tilting means with interrelated dovetails on the cutters and ways of the body extension. The court also found that none of the underreamers of the prior art combined cutters "tilting over the lower end of the reamer body with shanks having dovetails so interrelated with dovetail ways upon the body of the reamer as to afford inner, outer, and lateral bearings when in the reaming position."

In the Double reamer we find the hollow mandrel, the mandrel having a longitudinal hole for the reception of the spring and rod. The hole has a lateral shoulder upon which the spring is seated; the lower end of the mandrel has a downward extension which is hollow or drilled for the reception of the spring-actuated rod and for the reception of the key, upon which slips are hung, and there are opposite parallel bearing faces upon which the inward projections of the slips rest when in reaming position. The bottom of the downward extension has rounded faces with shoulders. At the side of the downward extension there are dovetails sloping upwardly and inwardly beneath the shoulders and joint member, which subdivides the mandrel and confines the rod and its spring.

In the Wilson underreamer we find a hollow mandrel having a longitudinally drilled hole for the reception of the spring-actuated rod, but there is no internal shoulder upon which the spring seat rests. The spring seats there move upon a removable key or block. Wilson et al. v. Bole & Double et al., 227 Fed. 607, 142 C. C. A. 239. The seating of the spring upon the removable key, instead of upon a fixed shoulder in the mandrel, appears to be novel; but in the Double device the key performs the service of connecting the slips with the spring-actuated rod. In the Wilson mandrel we find the bottom has two prongs, terminating in lugs, which spread the cutters apart into reaming position and hold them so spread, and as described in Union Tool Company v. Wilson, supra, above the lugs there are parallel shoulders in dovetails which form ways for the shoulders on the cutter shanks. The devices operate upon different principles and under different modes of operation. The mandrel of the Wilson has no internal shoulder, no downward extension with its hollow, no slot, no opposite parallel bearing faces, and no rounded or beveled lower edge; nor has it shoulders at the side of the downward extension, nor dovetails sloping upwardly and inwardly beneath the shoulders, nor what

Digitized by Google

is called the "sub" or extra joint in the body of the underreamer. The hollow or longitudinal hole in the Wilson mandrel, the hole being for the reception of the spring and rod, and the shoulders inside of the prongs for the reception of the cutter shanks being parallel, do not permit a sliding action of the shanks of the cutters upon the suspension means to permit tilting, but merely allow the lower ends to swing toward each other, a pendulum swing, pivoting on the point of suspension, the integral cross at the bottom of the spring-actuated rod.

This mode of operation is new with Wilson, and is covered by his patent, No. 827,595. In the Double reamer the slot is not only a key guide, but its lower walls act as a stop for the key, or the downward travel of the rod, key, and cutters. The Wilson device has no such part, with any such functions, in the open spring between the prongs of the body. In the Wilson reamer No. 2, the removable key in the body serves the double function of supporting the spring at its lower end and acting as a stop to arrest the downward travel of the rod by engaging with the upper wall of the elongated slot in the rod. The means used in this rod-affecting function are quite different in the Wilson reamer from those employed in the Double reamer, and we do not understand that the Wilson pronged type of underreamer can be held the equivalent of the hollow slotted extension type of the Double reamer body. It is significant that the slot features of the Double extension, with its two functions, is lacking in the Wilson reamer.

Proceeding, we find that the tilt slips in the Double reamer, connected with the mandrel and with dovetails, play in the slipways on the mandrel, with key seats larger than the key, with inward projections which slide upon the downward extension of the mandrel, and with the upper faces of these inward projections sloping downward. In the Wilson cutters there are not inward projections which slide upon the downward extensions of the mandrel, nor are there the upper faces of the inward projections sloping downwards. In fact, the Double cutter does not contain shanks; whereas, the Wilson cutter has a cutter head and a long shank. The design of the cutter in the Wilson device, co-operating with the special design of the mandrel, allows the cutter heads to bear solidly against the prongs when in reaming position, but, when collapsed, the cutter head is below the prongs and the shanks are in between the prongs. This interrelationship between the Wilson pronged mandrel and the Wilson cutter with its shank and head and bearing on the projecting shoulders of this head enables an operation whereby the portion of the mandrel which serves to spread the cutters and hold them apart in reaming position is not between the cutters when the cutters are in collapsed position. The description of such construction is that the cutters can be given a very great strength, inasmuch as no material has to be removed from them to make room for the spreading device when the cutters are collapsed.

In the Double underreamer the rod plays in the mandrel, is supported by a spring, contains a key seat, in which is a key which plays in

Digitized by Google

the slot or keyway in the downward extension. and the key has a notch to permit the rod to engage it and thus to prevent displacement. Wilson shows a rod or stem with a cross or T which as a single member plays in the mandrel, is supported by the spring, and draws the cutters upward into reaming position. But there is no key seat nor key playing in the slot or keyway of the downward extension of the mandrel. A slot cut in the rod or stem of the Wilson reamer appears to allow room for a vertical play of the rod or stem; but the seats for this key are in the mandrel, and not in the rod, and the key is a part of the mandrel not belonging to the rod or stem. Comparison of the elements of patents shows in the Double device the downward extension, the slot in the downward, and the inward projections in the slips; none of these elements appears in the Wilson reamer. On the other hand, Wilson shows certain novel elements not contained in the Double underreamer. The tilting action of the cutters of the Double device, due to the presence of the spreading member or downward extension between the cutters at the time of collapsion, is not to be had in the Wilson reamer, for, as already indicated, there is no part of the mandrel between the cutters at the time of collapsion, upon which there could be a tilting.

It is contended that the tilting action of the Double cutters is not old in the art, in that the Double underreamer shows shoulders removed high up on the slips close to the key, which acts as a fulcrum, and that the location of the shoulders causes the sudden collapse of the cutters. But an examination of the claims of the Double reamer fails to show the inclusion of that feature in the patent; moreover, the quick collapse of the cutters in the Double reamer is due to the fact that they do not collapse during the downward movement, when they are sliding upon the opposite parallel bearing faces of the downward extension, except that slight collapse enabled by the outward travel of the upper ends of the cutters on the key. But, when the inward projections of the slips pass off of these opposite parallel bearing faces, then we have the collapse of the cutters. The record shows that this operation causes what is called "plunging," and which is obviated in the Wilson underreamer, because of the fact that the cutters there collapse from the beginning of the downward movement.

[4] Inasmuch as the invention of Double was not broad and primary in its character, we believe that the doctrine of equivalents is not broadly applicable (Paper Bag Patent Case, 210 U. S. 405, 28 Sup. Ct. 748, 52 L. Ed. 1122), and that, therefore, the inclined bearing faces on the prongs of the Wilson device are not the equivalent of the opposite parallel bearing faces on the downward extension of the Double underreamer. It is thoroughly well established that the patentee is limited to his claims, and the patent is no broader than the claims, and, if the language of claims of the patent is clear and distinct, the patentee is bound by the language he has employed. Keystone Bridge Co. v. Phœnix Iron Co., 95 U. S. 274, 24 L. Ed. 344. Claim No. 1 of the patent involved does not describe any means of

Digitized by Google

producing the tilting action, and none of the other claims herein involved covers both the interrelated dovetails and the tilting means found by the court to be the essence of the invention of Double. There is no doubt of the success of the Wilson device, for the record shows that it met with immediate sale and great favor. The Double underreamer should be held to have been a step in the art, carried forward by Wilson's invention.

In conclusion, we hold that in the device designed by Wilson—the fork or pronged type of underreamer mandrel and the cutters and body with shanks to co-operate with lugs and ways on the mandrel, so as to allow having the spreading prongs or forks between the cutters when in reaming position, and with the hollow spreading device between them, when in collapsed position, with the cutters collapsed upon these prongs, instead of tilting or spreading—Wilson has invented, and that his device is distinct from the Double invention.

With respect to the contention of the appellee that the Double underreamer was the first successful device, we need only say that the record contains much evidence to the effect that there were other types of successful underreamers, namely, the Swan, Austrian, Plotts, Kellerman, O'Donnell & Willard, and others. None of them was wholly successful, but they were used until the Double underreamer came in and was more successful than any of its predecessors had been. But the Double underreamer was also not wholly satisfactory, because of the frequent breaks of the cutters, and it dropped behind after Wilson invented.

It must be held that the Double patent should be strictly construed, and the patentee, having limited himself to the elements of his combination, is limited in the construction of his claim to the devices shown. Oriental Tissue Co. v. Louis De Jonge & Co. (D. C.) 235 Fed. 296. The importance of this point is emphasized by the record, which shows that Double canceled his claim No. 8 and substituted claim No. 7, limited his specification, and amended his claims to provide for opposite parallel bearing faces upon his hollow slotted extension. He thus eliminated from his claim those things which were excluded by surrender of scope and of definition of his claimed combination. Wright v. Yuengling, 155 U. S. 47, 15 Sup. Ct. 1, 39 L. Ed. 64; Roemer v. Peddie, 132 U. S. 313, 10 Sup. Ct. 98, 33 L. Ed. 382; Greene v. Buckley, 135 Fed. 520, 68 C. C. A. 70.

What is called the Jones round-nosed reamer, which was introduced in evidence as one of the earlier forms of reamer, appears to have had dovetail cutters operating in open dovetail slipways, the cutter extending the periphery of the body to contact with the casing above the spreading bearings and above the fulcrum point; and the evidence shows that Double saw the Jones round-nosed reamer before he made the reamer of the patent in suit. It was also the opinion of the District Court that the tilting action of the cutters, as disclosed in the Brown patent, No. 687,296, was the same as that used by Double, excepting that the cutters were not actuated by the downward motion of the suspension means.

Digitized by Google

Appellant contends that the District Court erred in its view that the cutters in the Brown reamer patent were not actuated by the downward motion of the suspension means, and that the cutters do travel downwardly as the suspension means travels downwardly, and are positively actuated by such suspension means. We find it difficult to reach a satisfactory opinion upon this point, but it looks as though there was a tilting of the cutters in the Brown reamer substantially like the tilting in the Double reamer.

The decree of the District Court must be reversed, and the cause remanded, with directions to dismiss the complaint and to dissolve the injunction.

(249 Fed. 736)

UNION TOOL CO. v. WILSON.

(Circuit Court of Appeals, Ninth Circuit. February 11, 1918. Rehearing Denied May 13, 1918.)

No. 2918.

1. PATENTS ⟹328—VALIDITY AND INFRINGEMENT—UNDERREAMER.
   The Wilson patent, No. 827,595, for an underreamer, *held* not anticipated and valid, and claims 9 and 19 infringed.

2. PATENTS ⟹238—INFRINGEMENT—OMISSION OF PARTS.
   That an alleged infringer does not use all the features of the patented device does not negative infringement.

3. PATENTS ⟹314—SUITS FOR INFRINGEMENT—CONSOLIDATION.
   Under equity rules 19 (198 Fed. xxiii, 115 C. C. A. xxiii) and 26 (201 Fed. v, 118 C. C. A. v), a District Court has power to consolidate for trial patent causes which involve the same patent, where the parties are the same, although it effected a broadening out of the charge of infringement over a prior election in the record.

Appeal from the District Court of the United States for the Southern Division of the Southern District of California; Edward E. Cushman, Judge.

Suit in equity by Elihu C. Wilson against the Union Tool Company. Decree for complainant, and defendant appeals. Affirmed.

For opinion below, see 237 Fed. 847.

Frederick S. Lyon, of Los Angeles, Cal., for appellant.

Raymond Ives Blakeslee, of Los Angeles, Cal., for appellee.

Before GILBERT, ROSS, and HUNT, Circuit Judges.

HUNT, Circuit Judge. Appeal from an interlocutory decree in favor of Wilson, appellee, plaintiff, against the appellant, Union Tool Company, defendant, holding that Wilson patent No. 827,595, for an underreamer, patented July 31, 1906, was valid particularly as to claims 2, 4, 8, 9, 10, 11, 12, 13, 14, 15, 16, 17, and 19, and was infringed as to

---

Digitized by Google

claims 9 and 19 by the manufacture and sale or lease of the so-called "Double Improved and Type F" underreamers of a kind introduced as exhibits. Accounting was also decreed. The defendant denied infringement, and pleaded prior invention and want of novelty. The case was heard in the lower court in conjunction with Wilson & Willard Manufacturing Co. v. Union Tool Co., Edward Double et al., 249 Fed. 729, 161 C. C. A. 639, decided contemporaneously with the present case, wherein interlocutory decree was made in favor of the Union Tool Company, finding the Double patent, No. 734,833, for underreamers, valid and infringed as to claims 1, 2, 6, 7, and 8 thereof, and providing for accounting and costs. The parties to the two suits are not identically the same, but the suits pertain apparently to the same interests, as one of the plaintiffs in the last referred to suit is the defendant in the present appeal, and the defendant in 2996, the Wilson & Willard Manufacturing Company, is the same company as in this case, 2918. The same general interests have been found to use the invention of the other interests, with its own, in the making of its underreamer product. The two suits were instituted under letters patent for underreamers for enlarging oil well holes to allow the lowering of the casing. The Double underreamer patent, 734,833, was issued in 1903, and, as stated, the Wilson patent in suit was issued in 1906. In both suits prior patent art was relied upon as a defense, and in both cases it was found that neither patent was anticipated; that is, that the underreamers made by the defendant in the one case infringe the Double patent, and the underreamers manufactured in the other case infringe the Wilson patent.

[1] Claims 9 and 19, found infringed, are as follows:

(9) "An underreamer body terminating in prongs forming a fork and provided with shoulders on the inner faces of the prongs which form cutter ways and terminate in downwardly projecting lugs, and cutters mounted between the prongs of said fork and having shoulders inside the fork and faces to bear on the projecting lugs."

(19) "An underreamer comprising a body terminating in two prongs, and cutters each having two shoulders and a bearing face on the inner side of each of the two shoulders to engage said prongs."

The contention of the appellee is that claims 9 and 19 use the term "prongs" to designate the portions of the body which are provided with other working features, such as shoulders on their inner faces and the downwardly projecting lugs at their lower ends; that the term "prongs" is used as defining the bifurcated structure at the lower end of the body, which, under the Wilson patent, permits the cutters to collapse closely together, approaching each other between such prongs and likewise permits assembling at the bottom of the reamer and remachining. It is not contended by the appellee that this close collapsing operation of the cutters is found in the underreamers of the Union Tool Company, which are said to infringe; but it is insisted that the interrelation and other construction pertinent to the provision of shoulders on the inner faces of the prongs and downwardly projecting lugs at their lower ends, with both of which the

Digitized by Google

cutters co-operate, have been adopted by the appellant as also have been the assembling and remachining advantages. To this, therefore, we will confine our consideration.

Wilson, in his underreamer, shows a hollow elongated body provided at its lower ends with the projections or prongs forming a fork and terminating at their lower ends in downwardly projecting lugs; such prongs having shoulders on their inner faces to form ways for cutters. The cutter shanks have bearing shoulders which engage inside of the ways, the cutters also having expansion bearing faces on lateral shoulders, which expansion faces coact with the spreading bearings on the lugs which hold the cutters apart. The lugs terminate at their lower ends in beveled end faces over which ride bearings, in which the expansion bearing faces terminate at their upper ends, thus causing the cutters in the main to be expanded and permitting them in the main to be collapsed, although the spreading bearings are slightly upwardly and outwardly inclined to terminate the expanding action and initiate the collapsing action by coaction with the expansion bearing faces. The cutters are pivotally connected with a spring-actuated rod or stem at a T-head or cross at the lower end thereof; the connection being by means of recesses or pockets in the inner faces of the cutters. These pockets are formed in the cutter shanks. The spring-actuated rod or stem is received within the hollow body of the underreamer, and adapted to move endwise therein; the spring which actuates such rod or stem being confined between a nut threaded onto the upper end of such rod, and a holding device shown in the patent to consist of a block which forms a seat for the spring at its lower end, and through a hole or bore in which the rod or stem may play, such block being held in place in the hollow body by dowel pins or the like. Down-thrust bearings on the body between the prongs co-operate with the upper ends of the shanks of the cutters, and other down-thrust bearings are in the nature of shoulders on the forks at the lower ends of the shoulders on the prongs, and which co-operate with the cutters at the zone of the bearings. In-thrust upon the cutters in action is taken by the spreading bearings to which it is imparted by the expansion bearing faces, and out-thrust of the cutters is taken by the shoulders of the ways on the prongs which co-operate with the bearing shoulders on the cutter shanks. The cutters are provided with certain shoulders on their outer faces, which coact with the casing or shoe, causing the cutter to be collapsed when the underreamer is to be elevated and withdrawn through the casing. A detachable crosspiece or safety bolt is provided between the lugs at the lower ends of the prongs, which to a certain extent braces the prongs and also prevents the cutters and the T or cross from dropping into the hole and being lost, in case the rod or stem should break, and similarly prevents dropping of either cutter in the hole in case a fracture should occur through the cross or T. This detachable crosspiece is held in place in two bolt holes in the lugs, within one of which fits a nut into which one end of the bolt is screwed by a suitable implement. For convenience the illustrations may be referred to.

Digitized by Google

E. C. WILSON UNDERREAMER.

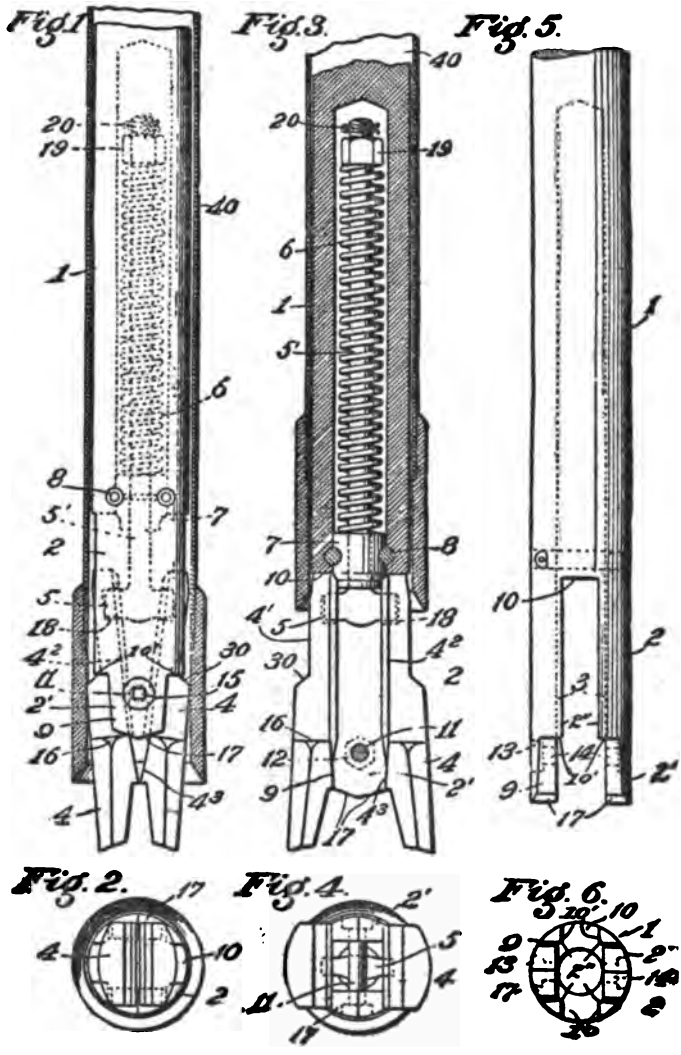

Digitized by Google

DEFENDANT'S EXHIBIT DOUBLE PATENT NO. 1.

E. DOUBLE UNDERREAMER.

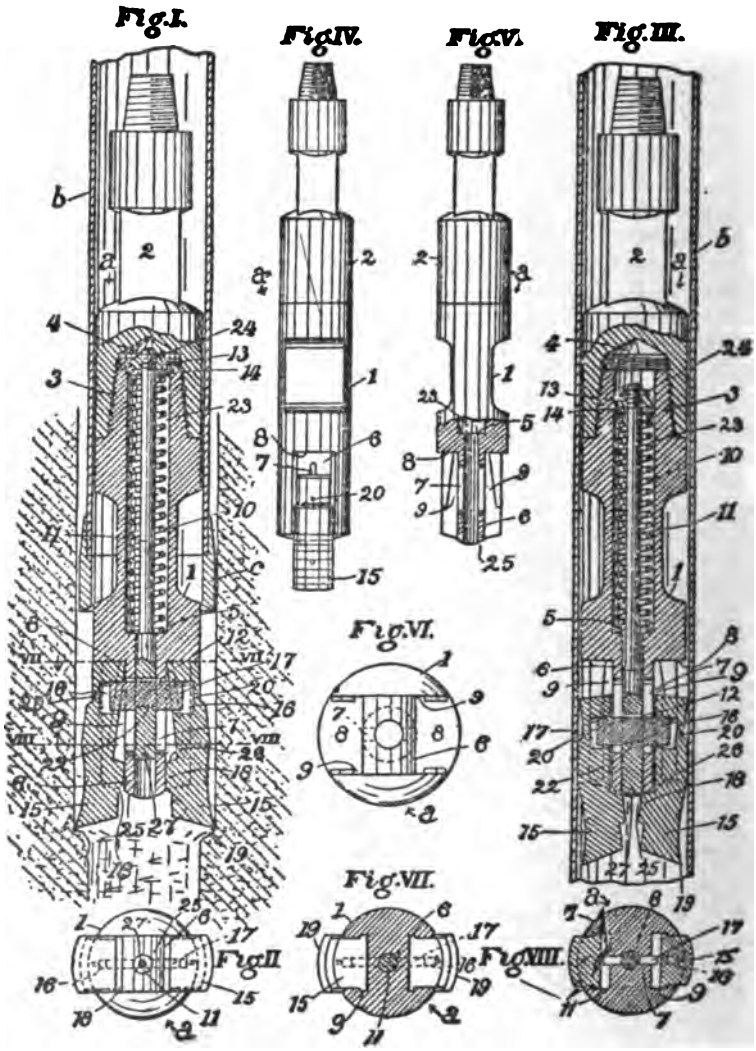

Digitized by Google

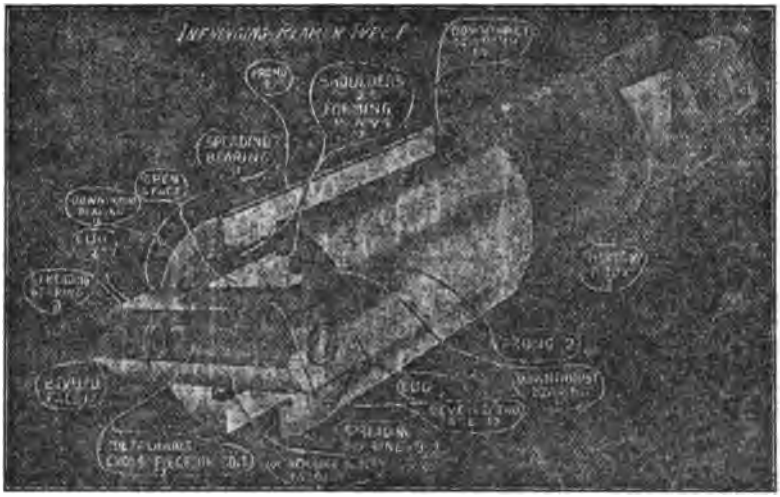

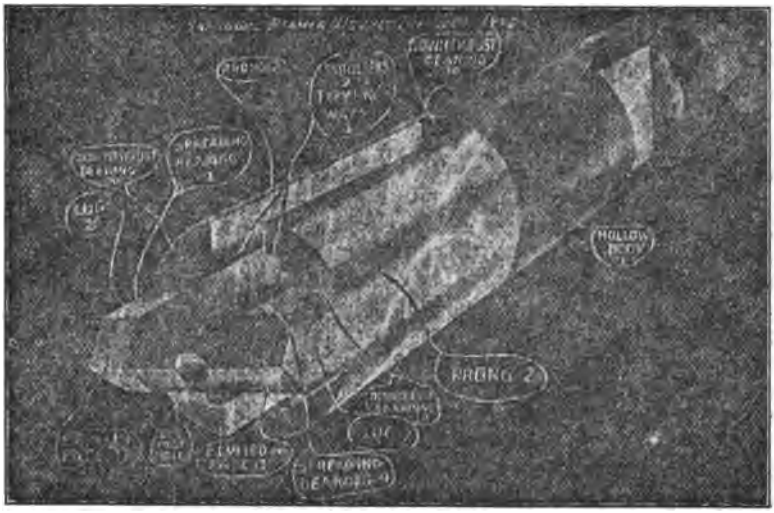

Digitized by Google

In use the cutters are drawn down against the expansive action of the spring, the rod or stem and the cutters moving together, and the expansion bearing faces moving over the spreading bearings until the bearings ride over the beveled end faces, permitting the cutters more closely to approach each other, or swing together, in which action they may be accommodated between the prongs, so that the cutters may be entered into the well casing. The underreamer is lowered through the casing with the cutters so collapsed, and the cutters are retained in such positions of collapsion due to their confinement within the casing. But, when the cutters emerge from the lower end of the casing or the shoe thereon, they are permitted to expand, the expansion bearing faces riding up over the spreading bearings until the upper ends of the shanks of the cutters come against the down-thrust bearings of the cutter, and, if the parts are so specifically formed, the bodies of the cutters at their sides are brought up against the down-thrust bearings. The reaming of the hole is necessary in order to cut away the annular shoulder or wall in the hole which remains beneath the casing after a certain period of drilling operation has ensued; this annular shoulder remaining because the drilling bit has an outside diameter less than the inner diameter of the casing. The underreamer is brought into position to remove the shoulder, and its cutters are expanded in the space immediately above the shoulder and beneath the shoe of the casing, which is elevated to make clearance between it and the shoulder for the cutters. The cutters being in expanded positions, the underreamer is reciprocated in the hole, or raised and permitted to drop alternately by means of a drilling line which is attached to the walking beam in the derrick at the mouth of the hole. The cutters attack the formation of the shoulder, and chip it or break it away, and reduce it to chippings which are mixed with water within the hole by a circulating system to produce a mud which is led away from the mouth of the hole by a bailer. When the underreaming operation has gone on to a point practically coincident with the bottom of the drilled hole and the casing has been lowered correspondingly, the underreamer is put into condition for withdrawing from the hole by elevating it until the shoulders come into engagement with the lower end of the shoe on the casing, which pinches the cutters inwardly and causes the expansion bearing faces to ride downwardly over the spreading bearings until the bearings are brought into engagement with the beveled end faces upon the lugs, over which latter they ride until the cutters assume the collapsed positions. The body of the underreamer travels upwardly, while the cutters remain relatively stationary, and when the cutters have assumed the collapsed positions they enter the casing or the shoe, and being confined by such casing, and so held in collapsed condition, the entire underreamer is elevated and withdrawn from the casing at the mouth of the hole.

Appellee urges that an important feature of the underreamer is the possibility of assembling the underreamer or cutters, the spring-actuated rod and its spring, and the body, at the lower end of the underreamer, without employing a middle joint in the body or a cap

Digitized by Google

or joint at the upper end thereof, and contends that this advantage flows from the combination of parts and features provided by Wilson and which was not possible before Wilson invented. It is pointed out that the Double patent, No. 3, although showing a construction and interrelation of features whereby the cutters and spring-actuated rod and its spring may be removed at the lower end of the body, nevertheless, part of the body has to come away with these parts.

We now turn to the evidence of infringement of the claims referred to. The bodies in type F of the Double underreamer and in the Wilson underreamer are surmounted by a square and suitable threaded joint for the attachment of a string of tools. In both reamers the main bodies are single pieces, and in the bore of such reamers is placed a spring for flexibly supporting the underreamer cutters. At the lower end of the bore are fork-mouthed extensions which have on their inner faces grooves or dovetail ways for the retention of the cutters, these co-operating with the dovetails on the shanks of the cutters. At the lower end of the prongs are bearing faces which bear against the inner faces of the cutters on the body of the cutters, and in the Double reamer this bearing extends somewhat up on the shank of the cutter. On the lower end of the prongs are holes to receive a bolt, which bolt is threaded into one of the prongs after passing through the hole in the other. In the Double reamer type F the bolt is arranged to support a loose or movable block which does not exist in the Wilson reamer. This block forms an extension of the bearing faces on the lower ends of the prongs, which bearing faces coact with the cutters when in expanded position. There are, on the lower ends of the prongs in both the Double and Wilson underreamers, upwardly and outwardly inclined bearing faces, with angles of outward inclination of the lowermost bearing faces on the prongs of the Double reamer; the angles being the same in both devices. The effect of the angle is to regulate the pressure of the cutter against the walls of the casing when passing into and out of the well. The cutters in both devices consist of a body surmounted by a shank with the dovetails on the shank, a shoe notch on the outer edge of the shank, and suitable tapered bearing faces at the lower end of the shank, which bearing faces are intended to ride against the casings when the cutters are collapsed, and a tapered inclined portion just above the shoe notch. The body of the cutters consists of a curved exterior portion meeting with two parallel lateral faces. The inside portion of the body is cut out or relieved of the upper curved portion, below which is a straight portion or plane surface at right angles to the lateral planes of the cutter body. Above this in both reamers is a plane face, which forms bearing faces on the outward extensions or shoulders of the body of the cutters beyond the shank. The upper end of the shank of the cutter shown in the Wilson patent is a slot against which bears the prong or extension called the T-bar of the underreamer. In the Double reamer the cutter has, near the upper end of the shank, a square lug projecting inwardly with a shoulder which bears against a projection on the lower end of the T-bar or cross. In both reamers there are,

Digitized by Google

at the upper end of the T-bar, suitable threads for the reception of the nut, also holes for a cotterpin, and cotterpin for supporting the upper end of the spring.

In the Wilson patent the lower end of the spring is supported upon a block, which in turn is supported by pins which rest against the holes in the body. In the Double reamer (type F) the lower end of the spring bears against a key, the lower edge of the key resting against holes or slots in the sides of the underreamer body, the key having suitable downward projections for retaining the same in the body and passing through an enlarged slot in the T-bar. In the Wilson patent the block consists of a cylindrical piece with suitable reception notches at the sides of the pins. The lower portions of the block extend down and form a thrust bearing between the upper ends of the cutter shanks. In the Double reamer there are shoulders on the inside of the prongs, which form a bearing at the upper end of the shank of the cutter to prevent inward displacement of the shanks, but the main portion of this is supported by the pressure of the lug at the inward and upward end of the cutter shank against the lower end of the T-bar. The dovetail ways on the cutters of the Wilson patent engage in the body with shoulders, which are parallel to the axis of the underreamer body. In the Double reamer (type F) the shoulders on the shank of the cutter bear against upwardly and inwardly inclined dovetailed ways on the insides of the prongs of the underreamer body. In the Wilson patent the bearing faces at the lower ends of the prongs on the underreamer are inclined upwardly and outwardly, while in the Double reamer the faces are parallel. In the Double patent on the face of the cutter at the lower end of the shank, where the same joins the body of the cutter, and outside of the dovetailed ways on the shank, are auxiliary dovetail ways which extend upwardly for a distance of approximately one inch in the exhibit produced. These dovetailed ways do not appear on the cutters of the Wilson patent drawings. On the back of the shank of the cutter or inside of the same is a notch, with a short downwardly and inwardly inclined plane at its lower edge, and its upward edge is an inwardly inclined plane, which is cut in the back of this cutter for the purpose of preventing the collapsing over the inserted block, which rests on the bottom bolt and also upon the slight inward shoulders on the lower ends of the prongs. In the Wilson patent no such notching appears.

The testimony shows that the block which is held in place by the detachable bottom bolt in the type F reamer is for the purpose of forming an extension of the bearing faces at the lower ends of the prongs in the underreamer body; but the underreamer would be as operative without the block as with it. This being true, it would appear as though the object of providing the block was to distinguish the underreamer type F from the Wilson underreamer by an attempt to make the bearing surfaces on the lower ends of the prongs of the underreamer continuous, whereas in the Wilson underreamer they are separate and distinct. The block can be put in position, but the evidence is that, if the lower end of the underreamer body is worn

Digitized by Google

by use, it would probably be difficult to extract the block from the lower end of the reamer, and when extracted that it would be difficult to replace it where it belonged.

Another point emphasized in the evidence was that in type F reamer there is no such hollow slotted extension as had been shown in certain other underreamers made by the Union Tool Company. In the type F there is a horizontal hole through the block. The evidence is that probably the lowest limit of the spring-actuated rod would butt against the block; such action being like that which occurred in the old hollow slotted extension reamers by the key butting against the lower end of the slots in the hollow slotted extension. It appears that there was a loosely mounted key passing through the spring-actuated rod of what was called the Double improved reamer and cutters. But the key in type F reamer, held in holes or openings in the body and passing through a slot in the spring-actuated rod, was to be found in the Wilson underreamer, manufactured by the Wilson & Willard Manufacturing Company after the spring of 1911.

Letters patent have been issued for an underreamer disclosing and claiming a key similar to the one referred to in combination with the other parts and features. Wilson et al. v. Double & Bole, 227 Fed. 607, 142 C. C. A. 239. The evidence discloses that when the detachable block is in place, and held in place by the bottom bolt in the type F reamer, the tendency is to assist the action caused by the shoulders on the lower ends of the prongs on the underreamer in expanding and collapsing of the cutters. The key, when in place, supports the lower end of the spring when the parts in the reamer are all in working position, and limits the downward movement of the spring-actuated rod by the contact of the upper edge of the slot in the spring-actuated rod coming in contact with the upper edge of the key. The real purpose of the block and bottom bolt is to prevent loss of parts out of the underreamer body in case the spring-actuated rod or key are broken, but the block in itself forms an extension of the bearing face of the lower ends of the prongs or forks at the lower end of the body.

Without extending the statement of the evidence, it is sufficient to say that a reading of it satisfies us that there are various decided advantages incident to co-operation and coaction of the several parts and features, in the expanding and collapsion of the cutters, the imparting of in-thrust and up-thrust and out-thrust, the prevention of rotatory action, prevention of what is called "keyholing," and achieving of a more effective and extended cutting zone and cutter action, and gaining of more stock in the cutters to utilize. It is quite apparent from the evidence that the conception of Wilson has resulted in a reamer with end cutters, disposed for operation at the lower end of the body, in which there are the advantages of a proper expanding and collapsing, and better provision for in-thrust with the parts capable of being assembled in an open mouth in the bottom and in which the lower end of the reamer could be remachined, and in which the solid T could be used. To accomplish these many desired

Digitized by Google

and formerly unattained features and characteristics, Wilson has invented by an operative and efficient combination, and we believe that infringement as to claims 9 and 19 has been well shown. The old idea prior to Wilson was to expand entirely by inwardly directed shoulders or surfaces entirely under or within the bodies or shanks of the cutters, and to Wilson is due the conception of provision of lateral shoulders and co-operating lateral surfaces upon the body for expansion and collapsion, in-thrust and prevention of rotatory action. In certain prior reamers, for example, defendant's patent No. 3, there were what are called "spaced stub projections" for supporting part of the underreamer body, and in defendant's exhibit Jones Removable Bowl Reamer there are spaced ways for cutters, surrounded by a bowl with which the cutters have to co-operate in expanding and collapsing. But Wilson has invented, so that nothing is required except prongs and cutters and up-thrust on the body in all of the underreamer expanding, collapsing, and working actions and strain resistances. He did away with the bolt, and no part of the body has to be removed for assembling the cutters and other features, and has done away with the necessity for assembling of parts at the lower end of the body, and other features as shown in the Double patent No. 3. The Double patent No. 3 shows a pin fixed in place and impossible of removing, but in the Wilson invention no joint had to be removed, and no stationary wall or hollow slotted extension had to be disturbed in the ready disassembling of the parts for removing the cutters. None of the prior reamers were capable of being remachined at the lower end without cutting away the spring-holding shoulder. But in the type F there appears to have been the use of such advantageous features.

We think the lower court was correct in its comments upon the plea of anticipation. The view taken was that, in the companion case it being held that the Wilson device infringed the Double patent, and that the Double patent was not anticipated by the prior patents referred to in that hearing, it followed that, in so far as the alleged anticipatory patents preceded the Double invention in time, none of them anticipated the Wilson invention, and with respect to the patents issued and the devices designed and used prior to the Wilson application for patent, and not shown to be prior to the Double invention, no anticipation was had. The District Court pointed out the essential differences of the so-called Jones removable bowl reamer, and held that the forks in the bowl reamer, while forming ways for the cutters, were not joined at the bottom in any way, and that the shanks of the cutters at all times bore against the prongs and did not collapse between them, and that the bearing at the end of the prongs, affording the inner face of the cutter, had in the removable bowl reamer, did not anticipate the bearings afforded by the lug face of the Wilson patent. The combination of parts in the bowl reamer was not the same, nor was the action the same, nor did the Jones, nor did what is called the O'Donnell & Willard underreamer (patent No. 762,435), have shoulder prongs with ways and cutters with shoulders

Digitized by Google

on the ways. In fact, what is spoken of as the "bowl mouth" in the Jones reamer could not be taken away without rendering the reamer inoperative.

[2] We believe that the Double patent No. 1 does not suggest the pronged formation, to permit close collapsion of the cutters assembled at the bottom of the reamer, or as carrying bodies for a lug element or cutter ways; nor do we find in Double patent No. 2 anticipation of the Wilson invention. There are, in this patent, supplemental lugs or dovetails on the cutter entering pockets or grooves, said to hold the slips and prevent them from spreading outwardly; but these are out-thrust bearings forming ways, and the lugs become supplemental dovetails or shoulders on the cutters added to the shoulders in the Double patent No. 1. The fact that the appellant has not used each attribute of the Wilson invention cannot excuse it from being held to infringement. The Paper Bag Case, 210 U. S. 405, 28 Sup. Ct. 748, 52 L. Ed. 1122; Stebler v. Riverside Heights Association, 205 Fed. 735, 124 C. C. A. 29; Parker v. Automatic Machine Co. (D. C.) 227 Fed. 451; Jackson Fence Co. v. Peerless Fence Co., 228 Fed. 691, 143 C. C. A. 213; Walker on Patents, § 350.

[3] Appellant makes much of the action of the court in consolidating the causes heard in the District Court, and of the action of the court in the consolidated cause as to the several types of reamers belonging to the appellant; but we find no error on the part of the court in its rulings and procedure. Under equity rules 19 (198 Fed. xxiii, 115 C. C. A. xxiii) and 26 (201 Fed. v, 118 C. C. A. v) the court was authorized to make the orders that it did; the appellant had its day in court, and presented its full defense. Inasmuch as the subjects of claims 9 and 19 are found in each of the defendant's improved reamers, including types D, E, and F, performing the same functions in substantially the same way, to produce the same results and obtain the same benefits, the appellee is entitled to a decree against the appellant.

The order, therefore, will be that the decree of the District Court is affirmed.

Digitized by Google

(249 Fed. 748)

WONDER MFG. CO. v. BLOCK et al.

(Circuit Court of Appeals, Ninth Circuit. May 6, 1918.)

No. 3118.

1. TRADE-MARKS AND TRADE-NAMES ⟹59(1)—INFRINGEMENT—WHAT CONSTITUTES.

Where plaintiffs had a trade-mark in the word "Wizard," defendant's sale of goods identical in appearance under the name "Wonder" was an infringement.

2. TRADE-MARKS AND TRADE-NAMES ⟹3(4)—APPROPRIATION—WORDS SUSCEPTIBLE OF.

The words "Arch Builder" and "Heel Leveler," used in connection with insoles in shoes, are susceptible of exclusive appropriation as trade-marks, since they are used in a secondary sense, for the terms of themselves do not suggest the purpose of correcting defects of the human foot; the first signifying one who builds arches, and the second suggesting the shoemaker's trade.

3. PATENTS ⟹324(5)—REVIEW—INJUNCTION.

On appeal from an interlocutory injunction in a patent case, the appellate court will go no further than to ascertain whether the court below abused its discretion; therefore, where it was not disputed that there was an infringement by defendant, the question of the extent of the infringement will not be reviewed.

4. PATENTS ⟹312(2)—INFRINGEMENT—ACTIONS—EVIDENCE.

Though an earlier patent was not set up in the answer or by notice, it is admissible in an infringement suit as evidence of the state of the prior art, and to aid in construing the claims of the patent asserted to have been infringed.

5. PATENTS ⟹312(2)—ACTIONS—EVIDENCE.

Though a prior patent was a mere paper patent, and there was no evidence that the invention had ever been used, it is admissible on the question whether a device infringes a subsequently issued patent.

6. PATENTS ⟹328—VALIDITY—ANTICIPATION.

The Block patent, No. 1,127,349, for the support of the anterior metatarsal arch of the foot, *held*, in view of the prior art, to have been anticipated and not to show invention, as to claim 1, for a flexible insole having a portion located beneath the anterior metatarsal arch of the foot of the wearer, and means for adjusting the thickness of the insole at one or more points along the line of such arch.

7. PATENTS ⟹328—SCOPE—INFRINGEMENT.

Block patent, No. 1,127,349, claim No. 2, *held* limited by the language of the claim, and, as limited, not infringed.

8. PATENTS ⟹172—CONSTRUCTION—LIMITATION.

Where a patentee was not the first in the field, and there had been earlier similar inventions, the scope of the invention must be deemed limited, by the language of the claim, to the construction therein specified.

9. PATENTS ⟹112(3)—ISSUANCE—PRESUMPTIONS.

The issuance of a patent creates a prima facie presumption of a patentable difference between the device for which a patent was issued and an earlier patented invention.

10. PATENTS ⟹328—INFRINGEMENT.

The Block patent, No. 1,061,353, for an arch support, claims 1 and 4, which present the combination of an insole member, an insertion, and self-contained means carried by the insole member and insertion, whereby the insertion may be detachably secured at predetermined points, *held* not infringed.

⟹For other cases see same topic & KEY-NUMBER in all Key-Numbered Digests & Indexes

Digitized by Google

Appeal from the District Court of the United States for the Second Division of the Northern District of California; Wm. C. Van Fleet, Judge.

Suit by Alexander E. Block and the Wizard Foot Appliance Company, a corporation, against the Wonder Manufacturing Company, a corporation. From a decree for injunction and order directing an account of profits and damages for infringement of trade-marks and patents, defendant appeals. Remanded with instructions to dissolve the injunction as to certain patents; the decree being otherwise affirmed.

Charles E. Townsend and Dewey, Strong & Townsend, all of San Francisco, Cal., for appellant.

Wm. A. Smith, of San Francisco, Cal., and James Love Hopkins, of St. Louis, Mo. (N. A. Acker, of San Francisco, Cal., of counsel), for appellees.

Before GILBERT, ROSS, and HUNT, Circuit Judges.

GILBERT, Circuit Judge. This is an appeal from a decree of injunction and an order directing an account of profits and damages for infringement of three trade-marks and four patents, all issued to Alexander Block, and all relating to insoles for shoes. The trade-marks are the word "Wizard," certificate No. 110,976, issued June 20, 1916, and the technical trade-marks, "Arch Builder" and "Heel Leveler."

[1, 2] We think that the court below properly disposed of all questions which arise in connection with the use of the trade-marks. The word "Wonder," upon goods identical in appearance with the plaintiff's goods, conveys the same idea as does the word "Wizard," and its use is an infringement. National Biscuit Co. v. Baker (C. C.) 95 Fed. 135; Florence Mfg. Co. v. J. C. Dowd & Co., 178 Fed. 73, 101 C. C. A. 565; Aluminum Cooking U. Co. v. National Aluminum Works (D. C.) 226 Fed. 815; Daniel O'Donnell v. Riscal Mfg. Co. (D. C.) 228 Fed. 127. And the terms "Arch Builder" and "Heel Leveler," as used by the plaintiffs, are susceptible of exclusive appropriation, since they are used in a secondary sense. The primary meaning of "arch builder" is one who builds arches. No suggestion is conveyed that the arch referred to is the arch of the foot. The primary meaning of "heel leveler" is perhaps more obscure, but it is more suggestive of the shoemaker's trade than that of the chiropodist. It is only in its application to the plaintiffs' device that its significance becomes apparent.

[3] It is said that the decree of the court below as to infringement of patent No. 1,043,058, for an arch support, issued November 5, 1912, should be modified, so as to permit the use by the defendant of the arch support shown in plaintiff's Exhibit 5; the contention being that, in view of the limitations placed upon the scope of plaintiff's patent by the proceedings in the Patent Office and the language of the claim, which covers "a plurality of overlapping pockets," etc., the plaintiffs should be limited to the feature which distinguishes that combination from the prior art, to wit, the overlapping pockets, and,

Digitized by Google

inasmuch as Exhibit 5 shows no overlapping pockets, its use is not an infringement. The contention cannot be considered on this appeal. The decree contains no finding that Exhibit 5 infringes the plaintiffs' patent. It finds only that the defendant has infringed the claim of the plaintiffs' patent. It is not disputed that plaintiffs' Exhibit 3 presents a device which does infringe the patent. This court can consider only the question whether the court below erred in finding that there was infringement, and on the appeal from an interlocutory injunction in a patent case an appellate court will go no further than to ascertain whether or not the court below abused discretion in granting the injunction. Kings County Raisin & Fruit Co. v. United States Consol. S. R. Co., 182 Fed. 59, 104 C. C. A. 499; Blount v. Société Anonyme, etc., 53 Fed. 98, 3 C. C. A. 455; Consolidated Rubber Tire Co. v. Diamond Rubber Co., 157 Fed. 677, 85 C. C. A. 349; Interurban Ry. & T. Co. v. Westinghouse E. & Mfg. Co., 186 Fed. 166, 108 C. C. A. 298.

The defendant admits its infringement of patent No. 1,191,655, issued July 18, 1916, for "combined heel and arch support," and abandons its appeal from the decree as to that patent.

[4] We are of the opinion that the defendant has not infringed letters patent No. 1,127,349, issued February 2, 1915, for a "support for the anterior metatarsal arch of the foot." The patent has two claims. The first is for the combination of "a flexible insole having a portion located beneath the anterior metatarsal arch of the foot of the wearer, and means for adjusting the thickness of the insole at one or more points along the line of said anterior metatarsal arch." The patent to B. Nathan, for an inner sole, December 17, 1907, may be referred to as showing the prior art. Nathan's inner sole contains a continuous transverse pocket beneath the metatarsal arch, wider at the outer-edges than at the center, and removable wedge-shaped fitting members for the pockets. The plaintiffs contend that the Nathan patent is to be disregarded, for the reason that it was not set up in the answer or by notice. But that is no objection to its use as evidence of the state of the art, and to aid in the construction of Block's claim. Grier v. Wilt, 120 U. S. 412, 429, 7 Sup. Ct. 718, 30 L. Ed. 712; Brown v. Piper, 91 U. S. 37, 41, 23 L. Ed. 200.

[5, 6] It is contended, also, that the Nathan patent is without probative value, for the reason that it is but a paper patent, and that there is no evidence that the invention has ever been used. But that fact does not affect its value as evidence upon the question of infringement. Universal Winding Co. v. Willimantic Co. (C. C.) 82 Fed. 228, affirmed, 92 Fed. 391, 34 C. C. A. 415; Packard v. Lacing Stud Co., 70 Fed. 66, 16 C. C. A. 639; E. L. Watrous Mfg. Co. v. American Hardware Mfg. Co. (C. C.) 161 Fed. 362. The Nathan patent presents all the features of claim 1 of the Block patent. It has a flexible insole located beneath the anterior metatarsal arch and means for adjusting the thickness of the insole at one or more points along the line of that arch.

[7-9] Block's second claim presents the combination of "a flexible insole beneath the anterior metatarsal arch, and a series of superim-

Digitized by Google

posed and overlapping members forming pockets mounted on the lower face of said insole, and insert members adapted to be removably seated in said pockets, substantially as described." The defendant's device has a single inclosed transverse pocket beneath the metatarsal arch, and four slits therein to permit the insertion and adjustment of an insert member, so that the same may be placed at any desired point along the line of the arch. It contains no superimposed or overlapping members forming pockets. If the Block invention were of such a character as to be entitled to broad construction, it might properly be held that the defendant's device presents a series of pockets, although in fact it is but one pocket, with a series of slits opening into the same. But Block was not the first to place pads in pockets in leather insoles, nor was he the first to place a pad beneath a metatarsal arch support. Pockets were old, and pads were old. He was the first, however, to use an insole containing a transverse series of pockets beneath the metatarsal arch. But his claim called for a series of "superimposed pockets," and we are of the opinion that, in view of the express terms of his claim and the state of the prior art, he should be held to have limited intentionally the scope of his invention by the language of his claim. Keystone Bridge Co. v. Phœnix Iron Co., 95 U. S. 274, 24 L. Ed. 344; McClain v. Ortmayer, 141 U. S. 419, 12 Sup. Ct. 76, 35 L. Ed. 800. By the superimposition of the pockets he obtained a structure which holds the pads in position without other attachment, and permits the location thereof at desired points on the line of the arch; whereas the defendant holds its pads in place by the metallic points which attach them to the lower covering of a single pocket.

We may advert also to the fact that on July 11, 1916, a patent, No. 1,191,122, was issued to James Brown, for a "foot corrector"; the invention showing an inclosed pocket beneath the metatarsal arch, the same containing slits at a plurality of points to permit the insertion of a pad, and the adjustment of the same in position, the device being identical with that used by the defendant, with the unimportant exception of the shape of the slits, and the means for attaching the pad. The issuance of that patent created a prima facie presumption of patentable difference from the Block invention. Hardison v. Brinkman, 156 Fed. 962, 87 C. C. A. 8; Miller v. Eagle Mfg. Co., 151 U. S. 186, 208, 14 Sup. Ct. 310, 38 L. Ed. 121.

[10] The defendant was held to have infringed claims 1 and 4 of patent No. 1,061,353, for an "arch support." Claim 1 presents the combination of "an insole member, an insertion and self-contained means carried by the insole member, and the insertion whereby the insertion may be detachably secured to the insole member at predetermined points." Claim 4 differs from claim 1 only in calling for a plurality of inserts, instead of a single insert. In the specifications the insole is described as containing imbedded therein a number of the sockets of ordinary glove fasteners, distributed at the heel, the instep, and at the ball of the foot. The insert is described as mounted with the obverse half of the glove fastener. No other locking device is mentioned, but the applicant said:

Digitized by Google

"It is obvious that the securing means may be any two-part separable locking device of which one part is seated in the insole member, and the opposite part in the lift or insertion, and which is therefore practically self-contained within the parts themselves, so that I am enabled to dispense with the use of bars, pockets, or other mountings in securing the lift or insertion to the insole member."

The defendant's device has no socket in the insole, has no two-part separable locking device of which one is in the insole and the other in the insertion, and it is not enabled to dispense with the use of pockets. It makes an insole with a pocket therein, and fastens its insertions by means of small sharply pointed metallic projections which penetrate the lower covering of the pocket. It uses no two-part device, and no interlocking device, and it does not attach the insert at predetermined points on the insole. These differences, we think, are sufficient to avoid infringement.

The cause will be remanded to the court below, with instructions to dissolve the injunction as to patents 1,127,349 and 1,061,353. In other respects the decree is affirmed. In the view of the defendant's inequitable use of advertising matter, we are not disposed to award costs to either party on the appeal.

(249 Fed. 752)

TURNER v. DEERE & WEBBER BLDG. CO. et al.

(Circuit Court of Appeals, Eighth Circuit. March 9, 1918. Rehearing Denied May 10, 1918.)

No. 4998.

PATENTS ⚷328—INVENTION—ANTICIPATION.

The Turner patent, No. 985,119, for improvements in reinforced concrete building construction, claims 1, 2, 4, 6, and 8 *held* void for lack of invention, in view of the prior art.

Appeal from the District Court of the United States for the District of Minnesota; Wilbur F. Booth, Judge.

Suit by Claude A. P. Turner against the Deere & Webber Building Company and another. From a decree for defendants (238 Fed. 377), complainant appeals. Affirmed.

Frank A. Whiteley, of Minneapolis, Minn. (Willard Eddy, of Omaha, Neb., on the brief), for appellant.

A. C. Paul, of Minneapolis, Minn., for appellees.

Before HOOK, CARLAND, and STONE, Circuit Judges.

HOOK, Circuit Judge. This case involves claims 1, 2, 4, 6, and 8 of patent No. 985,119, issued February 21, 1911, to Claude A. P. Turner, the plaintiff, for new and useful improvements in reinforced concrete building construction. The trial court held the claims void for want of novelty and invention; also that defendants had not infringed. 238 Fed. 377. The plaintiff appealed.

⚷For other cases see same topic & KEY-NUMBER in all Key-Numbered Digests & Indexes

Digitized by Google

In Turner v. Moore, 128 C. C. A. 138, 211 Fed. 466, we had previously decided that the elements of three of the claims, Nos. 1, 4, and 6, were old, and that it was not invention to bring them together as the plaintiff did. It is urged that that case is not conclusive of the one now before us, because the parties are not the same, and also because we have here two claims not then considered, and we are asked to consider much evidence not before presented or available. We have given due attention to these matters. The trial court discussed in detail the similarity of the two additional claims now involved to the three in the Moore Case and held there were no substantial differences. The court was clearly right; the differences were those of phraseology, not of principle or function, of which notice is taken in the patent law. The additional evidence in the present record has but served to confirm the conclusion in the prior case. The truth is that plaintiff was by no means a pioneer. The use of concrete in building construction was old. Its resistance to compression and susceptibility to other stresses in certain positions were familiar to all who had to do with it, as were the general principles of reinforcing it with wire, rods, or strips of metal which possessed the quality the concrete lacked. When the plaintiff entered, the art had so progressed that the nature of the stresses, and in a general way the places where the reinforcement should be disposed or arranged, were a part of the common knowledge of builders, as in greater degree was the subject of struts, braces, and the like in carpentry. In pretentious or complicated construction, where ordinary experience did not suffice, mathematical computation was available. The evidence of prior practice in building and prior publications and patents show that little was left for patentable invention in placing the customary pieces of metal here or there or turning them this way or that in the mass of concrete.

Since the Moore case the plaintiff's patent has been in judgment in the following cases: In Drum v. Turner, 135 C. C. A. 74, 219 Fed. 188, also in this court, it was held anticipated by the prior patent to Norcross, No. 698,542, April 29, 1902. In Turner v. Lauter Piano Co., 236 Fed. 252, the District Court for the District of New Jersey decided that claims 4 and 8 were void for lack of invention in view of the prior art. This conclusion was recently affirmed by the Court of Appeals of the Third Circuit. 161 C. C. A. 48, 248 Fed. 930. That court said that the places at which the stresses or strains in given concrete constructions may be expected, "while susceptible of accurate mathematical ascertainment, are so well known that they are determined empirically by many engaged in the art." The court added:

> "There is to-day neither invention nor novelty in merely placing metal reinforcement in concrete at places at which strains come. The very principle of reinforcement, as the word denotes, is to give force to or strengthen the place that is weak by adding something that is strong. Invention in reinforcement is to be found only in discovering a new principle or in employing new means embodying the old principle."

The decree is affirmed.

Digitized by Google

(249 Fed. 754)

T. A. WILLSON & CO., Inc., v. HUDSON PRODUCTS CO.

(Circuit Court of Appeals, Second Circuit. February 13, 1918.)

No. 154.

PATENTS ⟹328—INVENTION—DESIGN FOR GOGGLE FRAME.

The Bachman design patent, No. 43,514, for a design for a goggle frame, *held* void for lack of invention.

Appeal from the District Court of the United States for the Southern District of New York.

Suit in equity by T. A. Willson & Co., Incorporated, against the Hudson Products Company. Decree for defendant, and complainant appeals. Affirmed.

The following is the opinion of Manton, District Judge, in the court below:

Plaintiff sues for infringement of a design patent. Plaintiff is the present owner by assignment of letters patent No. 43,514, which were issued to Walter G. Bachman on February 11, 1913, for design for a goggle frame. The defendant is charged with manufacturing and selling goggles, the lenses of which are inserted in a goggle frame copied after the fashion and design of the plaintiff's patent.

The goggle frame is specified as: "Figure 1 is a front elevation showing the shape or configuration of the lens frames of the article of my new design, and Fig. 2 is a top or plan view showing the peculiar rear bowing of said lens frames, and which, in conjunction with the frontal formation of the said lens frames as shown in Fig. 1, define thereby main features of my said design invention." And he says: "I claim the ornamental design for goggle frame, as shown and described."

From an examination of the exhibits in the case, I am of the opinion that this design patent does not disclose invention. What has been done, if anything, in the patent in suit, has been to vary slightly the shape and disposition of the goggle frame of the otherwise old designs of goggle frames. I think the design so nearly resembles the prior art that it is not entitled to consideration. There is nothing that indicates patentable invention.

The bill will therefore be dismissed.

T. D. Rambaut, of New York City (Arthur C. Fraser, of New York City, of counsel, and Walter H. Stewart, of New York City, on the brief), for appellant.

Frederick P. Randolph, of New York City (Joseph F. O'Brien, on the brief), for appellee.

Before WARD and HOUGH, Circuit Judges, and LEARNED HAND, District Judge.

PER CURIAM. Decree affirmed.

⟹For other cases see same topic & KEY-NUMBER in all Key-Numbered Digests & Indexes

END OF CASES IN VOL. 161

Digitized by Google

INDEX-DIGEST

THIS IS A KEY-NUMBER INDEX

It Supplements the Decennial Digests, the Key-Number Series and Prior Reporter Volume Index-Digests

---

ABANDONMENT.

See Contracts, ⚷313; Evidence, ⚷90; Public Lands, ⚷40, 106.

ABATEMENT AND REVIVAL.

II. ANOTHER ACTION PENDING.

⚷14 (U.S.C.C.A.Pa.) Where order appointing substituted trustee under Delaware trust was revoked, existence of suit by substituted trustee against executor of deceased trustee, who was resident of Pennsylvania, *held* not to deprive federal court of jurisdiction of bill by nonresident beneficiaries against such executor.—Alexander v. Fidelity Trust Co., 61.

ACCOMMODATION PAPER.

See Banks and Banking, ⚷109.

ACCORD AND SATISFACTION.

See Novation.

ACCOUNT.

See Judgment, ⚷590; Mortgages, ⚷608½; Trusts, ⚷291, 305.

ACKNOWLEDGMENT.

See Limitation of Actions, ⚷148.

ACTION.

See Abatement and Revival.

II. NATURE AND FORM.

⚷23 (U.S.C.C.A.N.Y.) Where answer in action at law pleaded release as purely legal defense, plaintiff *held* not entitled, by filing replication, to obtain cancellation of such release, under Judicial Code, § 274b, as added by Act March 3, 1915.—Keatley v. United States Trust Co., 304.

III. JOINDER, SPLITTING, CONSOLIDATION, AND SEVERANCE.

⚷53(2) (U.S.C.C.A.Mich.) Where a purchaser, after being admitted into possession, defaulted, and the vendor forfeited the contract, such purchaser, having recovered damages on account of the vendor's inability to convey the title as agreed, cannot thereafter recover on account of improvements which it placed on the premises, for causes of action cannot be split.—Crocker v. Ingersoll Engineering & Constructing Co., 91.

ADEQUATE REMEDY AT LAW.

See Equity, ⚷220, 362; Trial, ⚷11.

ADMINISTRATION.

See Executors and Administrators.

ADMIRALTY.

See Collision; Maritime Liens; Seamen; Shipping; Towage.

IV. PLEADING, PETITIONS, AND MOTIONS.

⚷66 (U.S.C.C.A.Va.) The allowance of an amendment of the libel in a suit in personam, setting up an additional claim for damages growing out of the same alleged breach of charter, *held* within the discretion of the court.—Clinton v. Smith & Terry, 171.

V. EVIDENCE, AND TAKING AND FILING PROOFS.

⚷73 (U.S.C.C.A.N.Y.) The party found in fault upon the merits in a suit for injury to a vessel, although otherwise than in collision, must bear whatever inconvenience of hardship there may be in proving the exact amount of damages sustained.—The Mason, 628.

On an issue as to injury to a tow by stranding, not only the oral testimony of marine surveyors but their reports or surveys, as documentary evidence, are admissible.—Id.

IX. APPEAL.

⚷118 (U.S.C.C.A.N.Y.) Appellate court is reluctant to disturb finding of fact in admiralty case by trial judge, who had advantage of seeing and hearing witnesses.—The W. H. Flannery, 357.

Digitized by Google

⚷118 (U.S.C.C.A.N.Y.) Conditions considered under which evidence on an issue of fact in an admiralty suit is subject to review on appeal without reference to the finding of the trial court.—The Mason, 628.

⚷118 (U.S.C.C.A.Va.) While findings by an admiralty court on questions of fact are reviewable on appeal, when made on conflicting evidence they are entitled to and are given great weight, and will not be reversed, except for plain error.—The Baron Napier, 178.

ADMISSION.

See Appearance, ⚷9.

ADMISSIONS.

See Equity, ⚷363; Evidence, ⚷234.

ADVERSE POSSESSION.

See Limitation of Actions; Mines and Minerals, ⚷38.

I. NATURE AND REQUISITES.

(E) Duration and Continuity of Possession.

⚷43(4) (U.S.C.C.A.S.C.) Under law of South Carolina, possession of grantee under deed insufficient to convey legal title, but conveying equitable title cannot be tacked to possession of grantor.—Williamson & Brown Land & Lumber Co. v. Mullins Lumber Co., 448.

III. PLEADING, EVIDENCE, TRIAL, AND REVIEW.

⚷112 (U. S. C. C. A. S. C.) Adverse possession *held* sufficient under the law of South Carolina to raise a presumption of prior grant.—Williamson & Brown Land & Lumber Co. v. Mullins Lumber Co., 448.

AFFIDAVITS.

See Perjury, ⚷25.

AGENCY.

See Principal and Agent.

ALIEN ENEMIES.

See War, ⚷4.

ALIENS.

See Conspiracy, ⚷43; Constitutional Law, ⚷252; Criminal Law, ⚷1128, 1169; Perjury, ⚷25, 26; War, ⚷4.

AMENDMENT.

See Admiralty, ⚷66; Bankruptcy, ⚷84; Patents, ⚷109.

AMUSEMENT PARKS.

See Landlord and Tenant, ⚷167.

ANIMALS.

See Carriers, ⚷37.

APPEAL AND ERROR.

See Costs, ⚷232; Courts, ⚷356; Criminal Law, ⚷1043–1169; Exceptions, Bill of; Mandamus, ⚷4.

For review of rulings in particular actions or proceedings, see also the various specific topics.

III. DECISIONS REVIEWABLE.

(D) Finality of Determination.

⚷70(5) (U.S.C.C.A.Okl.) An order denying a motion to dismiss plaintiff's petition, not followed by decree disposing of the case, is not appealable.—Oklahoma, K. & M. I. Ry. Co. v. Bowling, 518.

(E) Nature, Scope, and Effect of Decision.

⚷110 (U.S.C.C.A.Colo.) Where, after entry, plaintiff filed motion to reconsider and enlarge the judgment, and such motion was denied, and exceptions taken, the motion, being practically a motion for new trial, cannot be reviewed on writ of error.—City of Goldfield, Colo., v. Roger, 99.

V. PRESENTATION AND RESERVATION IN LOWER COURT OF GROUNDS OF REVIEW.

(A) Issues and Questions in Lower Court.

⚷169 (U.S.C.C.A.Ohio) On writ of error, a judgment cannot be reversed on account of alleged newly discovered evidence, never called to the attention of the trial court.—Turner v. Schaeffer, 564.

(B) Objections and Motions, and Rulings Thereon.

⚷231(9) (U.S.C.C.A.Pa.) In view of rule 10 (224 Fed. vii, 137 C. C. A. vii), failure of trial court in defining preferential transfer in suit to set transfer aside under Bankruptcy Act July 1, 1898, § 60b, as amended by Act June 25, 1910, § 11, to use the word "reasonable," as used in statute, *held* no ground for objection on appeal; objection to instruction not specifically pointing out defect.—Campbell v. Kraus, 580.

(C) Exceptions.

⚷257 (U.S.C.C.A.N.Y.) Where no exception was taken to the dismissal of the complaint, an appellate court need not consider the matter on plaintiff's writ of error.—Farley v. Carey Show Print Co., 434.

⚷269 (U.S.C.C.A.Mich.) Where, in action by purchaser for damages on account of vendor's inability to convey title as agreed, there was error in favor of purchaser in assessment of damages, such error will not be considered; it appearing that it was more than counterbalanced by reason of vendor's forfeiture of improvements placed on premises by purchaser.—Crocker v. Ingersoll Engineering & Constructing Co., 91.

VII. REQUISITES AND PROCEEDINGS FOR TRANSFER OF CAUSE.

(D) Writ of Error, Citation, or Notice.

⚷397 (U.S.C.C.A.Cal.) Where appeal was allowed in open court, and was perfected during

Digitized by Google

term at which appeal was rendered, there was sufficient notice of appeal, without citation.—Edwards v. Bodkin, 488.

IX. SUPERSEDEAS OR STAY OF PROCEEDINGS.

⚷485(2) (U.S.C.C.A.Canal Zone) Where, under Rev. St. §§ 1000, 1007 (Comp. St. 1916, §§ 1660, 1666), bond superseding decree appealed from had been given, trial court is without jurisdiction to enforce obedience to decree by contempt proceedings.—Smith v. Government of Canal Zone, 281.

⚷492 (U.S.C.C.A.Canal Zone) Where, in violation of stay or supersedeas of decree from which appeal had been previously taken, trial court attempted to enforce it by contempt proceedings, and record and parties were before appellate court, it may set aside judgment or order in contempt proceedings, as an attempt to enforce decree suspended, though such judgment or order might not be subject to review on writ of error as attempted.—Smith v. Government of Canal Zone, 281.

X. RECORD AND PROCEEDINGS NOT IN RECORD.

(C) Necessity of Bill of Exceptions, Case, or Statement of Facts.

⚷544(3) (U.S.C.C.A.N.Y.) Appeals are decided on the record sent up whenever possible, and a decree will not be reversed where, from the record, the appellate court could determine nature of evidence improperly excluded, and that it would not have affected the result.—In re Soltmann, 413.

(K) Questions Presented for Review.

⚷671(1) (U.S.C.C.A.Okl.) Where trial court found that chattel mortgagee had valid lien on automobile sought to be forfeited under Rev. St. § 2140 (Comp. St. 1916, § 4141), because used by mortgagor to carry intoxicating liquors into Indian country, but declared lien of mortgagee inferior to claim of United States, mortgagee was entitled to raise on record question whether automobile was subject to forfeiture, as well as whether its interest could be forfeited.—Shawnee Nat. Bank v. United States, 509.

XI. ASSIGNMENT OF ERRORS.

⚷719(9) (U.S.C.C.A.Mich.) Where, in action by purchaser for damages on account of vendor's inability to convey title as agreed, there was error in favor of purchaser in assessment of damages, such error, not having been assigned, will not be considered, under rule 11 (198 Fed. xxii, 115 C. C. A. xxii).—Crocker v. Ingersoll Engineering & Constructing Co., 91.

⚷724(1) (U.S.C.C.A.Cal.) While in equity case specifications of error should state as particularly as may be in what respect decree is alleged to be erroneous, rule should be relaxed in favor of plaintiff, prosecuting appeal in personam pursuant to order allowing him to appeal in forma pauperis.—Edwards v. Bodkin, 488.

XII. BRIEFS.

⚷759 (U.S.C.C.A.Colo.) Assignments of error, not set out in plaintiff in error's brief as required by rule 24 (150 Fed. xxiii, 79 C. C. A. xxxiii), cannot be considered.—City of Goldfield, Colo., v. Roger, 99.

⚷773(3) (U. S. C. C. A. Cal.) Where plaintiff prosecuted appeal in forma pauperis under permission of order of Circuit Court of Appeals, relaxing rules 23 and 24 (150 Fed. cxiv, cxv, 79 C. C. A. cxiv, cxv), appeal cannot be dismissed because no printed brief containing concise abstract or statement of case had been filed or served as required by such rules.—Edwards v. Bodkin, 488.

XIII. DISMISSAL, WITHDRAWAL, OR ABANDONMENT.

⚷780(1) (U.S.C.C.A.Va.) A cause should not be dismissed by an appellate court without a hearing on the merits, because of a mere inadvertence of counsel, not amounting to flagrant neglect.—E. I. Du Pont de Nemours & Co. v. Smith, 377.

⚷781(6) (U.S.C.C.A.La.) Where, pending appeal from order enjoining sale of land under statutory foreclosure proceeding in state court, purchaser from mortgagor and his grantee contracted for extension with mortgagees, who recognized such purchaser as obligor in entire transaction, appeal will be dismissed; all questions other than costs having become moot.—Clark v. Fairbanks, 405.

XV. HEARING AND REHEARING.

⚷828 (U.S.C.C.A.Pa.) Where petitioner would be affected by decree appealed from, though he was not named therein, and had he then asked, he would have been heard when appeals were originally argued, his petition for reargument will be granted to avoid possible injustice; it appearing that he had no record notice of appeals.—Alexander v. Fidelity Trust Co., 61.

XVI. REVIEW.

(A) Scope and Extent in General.

⚷846(5) (U.S.C.C.A.Colo.) In the national courts, where a cause is tried to the court without a jury, and no special findings are made and none requested, there is nothing for review by an appellate court.—City of Goldfield, Colo., v. Roger, 99.

⚷859 (U.S.C.C.A.Ohio) On writ of error to review a judgment rendered in an action where jury was waived, only inquiries open are, in view of Rev. St. §§ 700, 1011 (Comp. St. 1916, §§ 1668, 1672), whether evidence tends to support ultimate finding, and whether the finding in turn is sufficient to sustain the judgment.—Turner v. Schaeffer, 564.

(E) Presumptions.

⚷907(2) (U. S. C. C. A. Okl.) Where, in proceeding under Rev. St. § 2140 (Comp. St. 1916. § 4141), to forfeit automobile on ground that it was used as means for introduction of intoxicants into Indian country, court found that chattel mortgagee had valid lien, but that it was inferior to rights of United States under forfeiture proceeding, it must be presumed, in

Digitized by Google

absence of evidence, that mortgagee had nothing to do with introduction of liquor into Indian country.—Shawnee Nat. Bank v. United States, 509.

⚷927(7) (U.S.C.C.A.Ohio) Where denial of defendant's motion for directed verdict was assigned as error, testimony must by appellate court be taken most strongly against defendant, jury having found for plaintiff.—Pennsylvania Co. v. Avran, 432.

(G) Questions of Fact, Verdicts, and Findings.

⚷994(3) (U.S.C.C.A.Ohio) On review of action tried to the court without a jury, credibility of witnesses cannot be weighed.—Turner v. Schaeffer, 564.

⚷1008(1) (U.S.C.C.A.Ark.) Findings by trial judge, who heard evidence and saw witnesses when testifying, will not be disturbed, unless clearly against weight of evidence, or induced by a mistaken view of law.—Farmers' State Bank v. Freeman, 505.

⚷1008(2) (U.S.C.C.A.Ohio) Both under the decisions and Rev. St. § 649 (Comp. St. 1916, § 1587), providing for waiver of a jury, finding of fact by trial court, whether general or special, has effect of a verdict.—Turner v. Schaeffer, 564.

⚷1009(1) (U.S.C.C.A.Mass.) Where witnesses appeared at trial, finding of fact in equity will not be disturbed, because of superior opportunity of lower court to determine question of witnesses' credibility.—Fuller v. Reed, 210.

⚷1009(1) (U.S.C.C.A.Mo.) In an equity case, findings of fact of trial judge, who heard the testimony, are entitled to high consideration.—Fay v. Hill, 389.

⚷1009(4) (U.S.C.C.A.Mo.) In equity case, findings of fact of trial judge, unless clearly against weight of evidence or induced by mistaken view of law, will not be disturbed by appellate court.—Fay v. Hill, 389.

(H) Harmless Error.

⚷1046(1) (U.S.C.C.A.Mo.) Where bill to cancel contract of sale, on which buyer had already sued, at least stated equitable defense, it was immaterial that bill was not transferred from equity side, for, had it been transferred and treated as answer to action at law, it would have been disposed of by court sitting as chancellor before trial of action at law to jury.—Fay v. Hill, 389.

(I) Error Waived in Appellate Court.

⚷1079 (U.S.C.C.A.Mich.) Where nothing more than the bare assignment of error is set forth in the brief, the error must be deemed waived.—Wege v. Safe-Cabinet Co., 606.

XVII. DETERMINATION AND DISPOSITION OF CAUSE.

(D) Reversal.

⚷1178(6) (U.S.C.C.A.Ill.) A general verdict, returned on trial of an action which was without reversible error, may be permitted to stand pending an inquiry and determination by the trial court on the question of its jurisdiction.—Chicago & A. R. Co. v. Allen, 288.

APPEARANCE.

See Courts, ⚷276.

⚷9(2) (U.S.C.C.A.Canal Zone) That defendant's counsel moved to set aside service on ground that court was without jurisdiction of subject-matter of suit is not an admission of the court's jurisdiction over defendant's person or a consent to the exercise of it.—Smith v. Government of Canal Zone, 281.

APPLICATION.

See Patents, ⚷101, 109.

APPOINTMENT.

See Receivers, ⚷58.

ARGUMENT OF COUNSEL.

See Criminal Law, ⚷730; Trial, ⚷120.

ARMY AND NAVY.

See Criminal Law, ⚷430, 441.

⚷40 (U.S.C.C.A.Cal.) In prosecution for failing to register under Selective Draft Act May 18, 1917, where baptismal record of defendant made by Roman Catholic priest, was introduced in evidence, it was competent for priest to testify as to tenets of his faith concerning baptism of infants.—Phelan v. United States, 103.

ASSESSMENT.

See Corporations, ⚷89; Limitation of Actions, ⚷66.

ASSIGNMENT OF ERRORS.

See Appeal and Error, ⚷719–759, 1079; Criminal Law, ⚷1130.

ASSIGNMENTS.

See Copyrights, ⚷47; Corporations, ⚷406, 426; Evidence, ⚷155, 234; Patents, ⚷200; United States, ⚷67.

I. REQUISITES AND VALIDITY.

(B) Mode and Sufficiency of Assignment.

⚷58 (U.S.C.C.A.Pa.) It is the rule in the federal courts that, unless debtor agrees to accept partial assignment of debt due him, he is not bound thereby.—Sheatz v. Markley, 323.

IV. ACTIONS.

⚷126 (U.S.C.C.A.W.Va.) All defenses and set-offs available against an assignor of a chose in action are available against his assignee.—Wagner v. Central Banking & Security Co., 197.

ASSIGNMENTS FOR BENEFIT OF CREDITORS.

See Bankruptcy.

ASSOCIATIONS.

See Joint-Stock Companies.

Digitized by Google

ASSUMPSIT, ACTION OF.

See Joint Adventures, ⚷5; Work and Labor.

ATTACHMENT.

See Bankruptcy, ⚷400.

ATTORNEY AND CLIENT.

See Bankruptcy, ⚷166; Criminal Law, ⚷730; Trial, ⚷120.

AUTOMOBILES.

See Appeal and Error, ⚷671, 907; Indians, ⚷35; Jury, ⚷19; Master and Servant, ⚷137, 265, 285, 287; Railroads, ⚷301, 327; Venue, ⚷8.

BAILMENT.

See Pledges.

BANKRUPTCY.

See Appeal and Error, ⚷231; Chattel Mortgages, ⚷190; Constitutional Law, ⚷163; Courts, ⚷340, 359; Judgment, ⚷721; Jury, ⚷31; Limitation of Actions, ⚷163; New Trial, ⚷108; Receivers, ⚷58.

II. PETITION, ADJUDICATION, WARRANT, AND CUSTODY OF PROPERTY.

(A) Jurisdiction and Course of Procedure in General.

⚷31 (U.S.C.C.A.Va.) Filing of schedules in bankruptcy by one member of a firm is not conclusive adjudication against another, who did not participate, but whose membership in firm was subsequently established.—Horner v. Hamner, 186.

(C) Involuntary Proceedings.

⚷57 (U.S.C.C.A.Ill.) Where property conveyed by alleged bankrupt largely exceeded debts discharged or assumed by grantee, conveyance must be deemed act of bankruptcy, and intended to hinder and delay petitioning creditor, whose claim was not assumed, though grantee, as part of consideration, executed and secured approval of bond superseding, for purposes of appeal, judgment in favor of petitioning creditor.—Morrison v. Rieman, 149.

⚷76(1) (U.S.C.C.A.Ill.) Where grantee of bankrupt executed supersedeas bond pending appeal from judgment against latter, *held*, that judgment creditor, though secured creditor, within Bankruptcy Act, § 1a (23), might in view of sections 56b, 57e, 57g, 57h, and 63a (4), waive his claim to security, so as to bring himself within section 59b, and file petition in bankruptcy.—Morrison v. Rieman, 149.

Where secured creditor deliberately, and not through error or inadvertence, files his claim as unsecured, making no mention of his security, he waives it in favor of estate, and cannot, after adjudication, assert it; so petitioning creditor, who was secured, may by express waiver and surrender of his security bring himself within terms of Bankruptcy Act, § 59b, and alone file involuntary petition.—Id.

⚷76(1) (U.S.C.C.A.Ohio) In view of Bankruptcy Act, § 1, par. 9, one holding note of bankrupt as agent or trustee of another is competent to join in involuntary petition in bankruptcy.—In re Veler, 543.

⚷81(1) (U.S.C.C.A.Mass.) An involuntary petition in bankruptcy against a partnership *held* sufficient, where it was answered without objection thereto, although it did not distinctly allege that the partners individually were insolvent.—Houghton Wool Co. v. Morris, 408.

⚷84 (U.S.C.C.A.Ill.) In view of Bankruptcy Act, §§ 59f, 59g, allowing creditors other than original petitioners to join in involuntary petition in bankruptcy, and rule 86, making provision for amendments, petitioning creditor, who was secured, may thereafter waive his security and amend his petition.—Morrison v. Rieman, 149.

General power to permit amendments, within sound discretion, inheres in bankruptcy as well as in other courts.—Id.

⚷91(2) (U.S.C.C.A.Ill.) In proceeding in bankruptcy, evidence *held* to warrant finding that, after bankrupt conveyed all but one parcel of his lands, he was insolvent.—Morrison v. Rieman, 149.

⚷91(2) (U.S.C.C.A.Mass.) Finding that an alleged bankrupt partnership was insolvent at the time of making preferential transfers *held* supported by the evidence.—Houghton Wool Co. v. Morris, 408.

⚷93 (U.S.C.C.A.Ill.) Where bankrupt, having demanded jury trial on question of his insolvency, as allowed by Bankruptcy Act, § 19, moved for leave to withdraw request, which was denied, jury being called notwithstanding, the calling of jury was upon court's own motion, and the verdict was merely advisory.—Morrison v. Rieman, 149.

⚷100(1) (U.S.C.C.A.Ohio) Where involuntary petition averred that alleged bankrupt had admitted in writing its inability to pay its debts and its willingness to be adjudged bankrupt, and alleged bankrupt consented to adjudication, filing answer admitting allegations of petition, adjudication is not open to attack on ground that written admission of inability to pay debts had not been made at time petition was filed.—In re Veler, 543.

(D) Warrant and Custody of Property.

⚷117(1) (U.S.C.C.A.Pa.) Where, as there were no funds to feed a herd of hogs belonging to bankrupt and to conserve them, they were disposed of by receiver, persons asserting claims to hogs may be allowed to assert them against moneys so realized.—Gealey v. South Side Trust Co., 225.

III. ASSIGNMENT, ADMINISTRATION, AND DISTRIBUTION OF BANKRUPT'S ESTATE.

(B) Assignment, and Title, Rights, and Remedies of Trustee in General.

⚷144 (U.S.C.C.A.Pa.) Where, after receiver is appointed in state court, bankruptcy proceedings are instituted, they terminate authority of state court; but such receiver has no power to surrender property in his hands, as it is in custodia legis and state court should direct him

Digitized by Google

to make surrender.—Gealey v. South Side Trust Co., 225.

⚷145(1) (U.S.C.C.A.Ill.) The liability of directors of a corporation, who declare and pay dividends when it is insolvent, created by Hurd's Rev. St. Ill. 1915—16, c. 32, § 19, *held* to be personal to creditors of the corporation, and not enforceable by its trustee in bankruptcy.—Seegmiller v. Day, 213.

⚷145(1) (U.S.C.C.A.Ohio) Right to recover for injuries to estate of bankrupt, resulting from wrongful appointment of receiver, vests in trustee when he is appointed.—In re Veler, 543.

(C) Preferences and Transfers by Bankrupt, and Attachments and Other Liens.

⚷163 (U.S.C.C.A.Ark.) Where within four months of adjudication, bankrupt, whose indebtedness to bank was overdue, gave a bill of sale conveying certain property to bank's attorney, who transferred to bankrupt funds lent by bank on security of bill of sale, and bank thereupon applied to its indebtedness such funds, which were deposited to credit of bankrupt, transaction must be deemed a scheme to prefer bank. —Farmers' State Bank v. Freeman, 505.

⚷166(3) (U.S.C.C.A.N.Y.) Under Bankruptcy Act mere fact that claimant knew from debtor's statement that he had previously been financially embarrassed and hard pressed by his creditors is not enough to show that payment on eve of bankruptcy was preference, where debtor had subsequently informed claimant that he had financed his business and was all right.—In re Salmon, 308.

⚷166(4) (U.S.C.C.A.Ark.) Under Bankruptcy Act July 1, 1898, § 60b, declaring that, if a transfer, etc., shall operate as a preference, and person receiving it or to be benefited thereby, or his agent, shall have reasonable cause to believe that transfer would effect a preference, it shall be voidable, notice of facts which would invite a person of reasonable prudence to inquiry is notice of all the facts which a reasonably diligent inquiry would develop.—Farmers' State Bank v. Freeman, 505.

⚷166(4) (U.S.C.C.A.S.C.) It is not sufficient to render preferential the taking of security or receiving payment from bankrupt that the creditor may have had a suspicion as to his solvency.—Bank of Commerce v. Brown, 97.

⚷166(5) (U.S.C.C.A.Ark.) Knowledge of an attorney, who acted in the transaction which culminated in preferential payment to his client, a creditor of the bankrupt, is imputable to the client.—Farmers' State Bank v. Freeman, 505.

⚷192 (U.S.C.C.A.Tex.) Under Const. Tex. art. 16, § 37, and Rev. St. Tex. 1911, arts. 5622–5627, seller of machinery who filed contract within one month of delivery *held* to have lien valid as against trustee in bankruptcy who under Bankr. Act, § 47a, took rights of lien creditor, for land on which machinery was installed could readily be located from contract. —Reeves v. York Engineering & Supply Co., 439.

⚷213 (U.S.C.C.A.Kan.) Where claimant transferred stock of goods and real property to bankrupts, taking chattel mortgage on goods and mortgage on real property, as well as mortgage on unthreshed grain, claimant could not, on bankruptcy of his transferees, be required to pursue grain which one bankrupt had threshed, absconding with proceeds, or on bare assertion that it was overvalued to take real property and give credit for amount at which it was valued, before enforcing his chattel mortgage.—Garrison v. Kurt, 582.

⚷213 (U.S.C.C.A.N.Y.) Under Bankruptcy Act, § 70, a trustee, when elected, is by operation of law vested with bankrupt's title as of date of adjudication, and where trustee was not made a party to a suit to foreclose a mortgage on the bankrupt's property begun after bankruptcy, but before trustee's election, equity of redemption, which passed to him, was not foreclosed by the judgment.—In re Soltmann, 413.

(D) Administration of Estate.

⚷243 (U.S.C.C.A.Mich.) Where in course of investigation of bankrupt's affairs under Bankruptcy Act, § 21a, testimony of a large number of witnesses was taken stenographically before referee, bankrupt in view of sections 39a(3), 47a(5), and 49a, as well as a local bankruptcy rule, is entitled, on paying charge fixed, to stenrupt's affairs under Bankruptcy Act, § 21a, the ographic copy of such testimony, for bankrupt must be deemed a party in interest.—Petition of Moulthrop, 426.

Where in course of investigation of a bank-testimony of a large number of witnesses was taken stenographically before referee, right of bankrupt to a copy cannot be affected because it had not been read over and signed by witnesses as required by General Order No. 22 and cannot be used as evidence against him.—Id.

Where pursuant to investigation of affairs of bankrupt testimony of a large number of witnesses was taken stenographically, fact that trustee denied that his petition on which was issued order to show cause why bankrupt should not be required to deliver certain property, etc., was based on such testimony, is no ground for refusing bankrupt a copy.—Id.

⚷262(1) (U.S.C.C.A.N.Y.) The sale of personalty of a bankrupt separate from realty, which together constituted a brewery and was mortgaged as such, *held* error.—In re Franklin Brewing Co., 341.

⚷262(3) (U.S.C.C.A.N.Y.) Court of bankruptcy has power to order sale of property of bankrupt free of liens and transfer same to the proceeds.—In re Franklin Brewing Co., 341.

A clause, in a mortgage securing bonds, giving the holders the right to bid on their bonds at any foreclosure sale, does not in any way limit the power of a court of bankruptcy to sell the property free from lien.—Id.

(E) Actions by or Against Trustee.

⚷287(3) (U.S.C.C.A.Ohio) Complaint or petition by trustee, addressed to bankruptcy court in exercise of its equity powers, praying accounting for damages resulting from appointment of receiver, which was secured through imposition on court, is not beyond equitable jurisdiction of court of bankruptcy.—In re Veler, 543.

Digitized by Google

⚷293(1) (U.S.C.C.A.Ill.) Court of bankruptcy *held* to have jurisdiction of a plenary suit by the trustee of a corporation to recover unearned dividends illegally paid to a stockholder.—Seegmiller v. Day, 213.

⚷293(4) (U.S.C.C.A.Ill.) The filing of an answer to the merits by defendant in a plenary action by a trustee brought in a District Court, without objection to the jurisdiction of the court, *held* to amount to a consent to such jurisdiction, within Bankruptcy Act, § 23b.—Seegmiller v. Day, 213.

⚷303(1) (U.S.C.C.A.N.Y.) When trustee makes prima facie case in proceeding to require bankrupts to turn over unscheduled assets, burden rests on them to account for property, or to rebut such case by credible evidence.—In re Chavkin, 350.

⚷303(1) (U.S.C.C.A.Ohio) Trustee in bankruptcy, alleging that transfers were preferential, has the burden of proof, and judgment in his favor cannot be based merely on suspicion.—Turner v. Schaeffer, 564.

⚷303(2) (U.S.C.C.A.N.Y.) Financial statement made by bankrupts a short time before bankruptcy, showing surplus of assets not scheduled, *held* admissible in evidence in proceeding by trustee to require them to turn over such assets.—In re Chavkin, 350.

⚷303(3) (U.S.C.C.A.Ark.) In a suit to set aside an alleged preferential payment to bank, evidence *held* to show that at time of payment corporate debtor, which was subsequently adjudicated bankrupt, was insolvent.—Farmers' State Bank v. Freeman, 505.

⚷303(3) (U.S.C.C.A.N.Y.) Order requiring bankrupts to turn over property *held* supported by evidence, on petition to revise such order in matter of law.—In re Chavkin, 350.

⚷303(3) (U.S.C.C.A.S.C.) Evidence *held* insufficient to show that a creditor, at the time of taking security from a bankrupt, had reasonable cause to believe him insolvent.—Bank of Commerce v. Brown, 97.

⚷306 (U.S.C.C.A.Ohio) A plenary action by trustee in bankruptcy to recover money only, alleged to have been paid as a preference in favor of a surety and his principal, is an action at law, reviewable on writ of error, instead of appeal.—Turner v. Schaeffer, 564.

(F) Claims Against and Distribution of Estate.

⚷314(3) (U. S. C. C. A. Neb.) Where brewing company located in Illinois gave to bankrupt exclusive right to sell its beer at wholesale, same to be delivered f. o. b., at Omaha, Neb., it was entitled to have allowed claims against bankrupt, based on sales made under contract, though it was not licensed in Nebraska to sell intoxicating liquors.—Thompson, Belden & Co. v. Leisy Brewing Co., 420.

⚷334 (U.S.C.C.A.N.Y.) Where a trustee in bankruptcy was not a party to proceedings of a creditor to foreclose his fourth mortgage, under which sale was had resulting in a deficiency judgment, the deficiency judgment did not constitute a liquidation of the claim under the mortgage, within Bankruptcy Act, § 57h, so as to be provable.—In re Soltmann, 413.

Where trustee in bankruptcy was not a party to suit to foreclose fourth mortgage, and mortgagee recovered deficiency judgment which he attempted to prove against bankrupt's estate, sole question for determination, claim not having been liquidated, was whether amount bid at foreclosure sale represented fair value of premises, and, referee having found that value of land was ample to secure the whole of mortgagee's claim, he was not obliged to fix its exact value.—Id.

Where a trustee in bankruptcy was not a party to a suit to foreclose a fourth mortgage, so that the deficiency judgment recovered by the mortgagee was not a liquidation of his claim, the judgment roll was admissible as some evidence of the value of the property.—Id.

⚷345 (U.S.C.C.A.Ill.) A trust deed, given to a creditor by bankrupt corporation, *held*, under its terms and the agreement on which it was delivered, subordinate to the claims of all other creditors.—In re Cloverdale Creamery Co., 230.

⚷345 (U.S.C.C.A.Ohio) Where secured creditor accepted receiver's certificate as partial payment on its debt, it cannot, having accepted certificate, assert that its lien was prior to that of the certificate.—In re Veler, 543.

⚷347 (U.S.C.C.A.Ohio) Where it was to interest of secured creditors, who held liens on property of bankrupt, that plant should be put into successful operation, and they acquiesced in appointment of receiver, and in sale of property by trustee free from their liens, receiver's certificates, lawfully issued, are entitled to priority in payment out of proceeds of property over liens of secured creditors.—In re Veler, 543.

V. RIGHTS, REMEDIES, AND DISCHARGE OF BANKRUPT.

⚷400(1) (U.S.C.C.A.Pa.) As claim for exemption is sufficient, if made generally under exemption laws of state, an order allowing Pennsylvania bankrupt shares of corporate stock as part of his exemption will not be reversed, because bankrupt claimed same under Act Pa. April 9, 1849, although act really allowing exemption was that of April 8, 1859 (P. L. 425).—In re Dittmar, 532.

Where a voluntary bankrupt claimed as exempt property which had been attached in proceedings in the state court brought by judgment creditor before filing of petition, it is proper for bankruptcy court, state statute declaring property exempt, to set it apart to bankrupt; order leaving property subject to lien of attachment, if any.—Id.

⚷404(2) (U.S.C.C.A.Va.) Failure to apply for a discharge in bankruptcy has same effect as if discharge in that proceeding had been denied.—Horner v. Hamner, 186.

Under Bankruptcy Act, §§ 1, 5, member of partnership *held* not precluded from obtaining discharge from individual liability on notes listed as firm debts, because of failure of partnership, which previously had been adjudicated bankrupt, to apply for discharge.—Id.

⚷407(3) (U.S.C.C.A.Cal.) That bankrupt fraudulently transferred property more than four months prior to filing of petition is no ground for opposing his discharge.—Gill v. White, 110.

⚷410 (U.S.C.C.A.Ill.) Showing *held* sufficient to sustain an order enlarging the time for

Digitized by Google

filing application for a bankrupt's discharge, under Bankruptcy Act July 1, 1898, § 14a.—In re Waller, 223.

⟹413(7) (U.S.C.C.A.N.Y.) Discharge is a statutory matter, and the court, as well as an objecting creditor, is confined to the specifications of objection.—In re Newmark, 349.

⟹414(1) (U.S.C.C.A.Va.) One filing specifications against discharge in bankruptcy has burden of proving them.—Horner v. Hamner, 186.

⟹414(3) (U.S.C.C.A.N.Y.) Evidence *held* insufficient to show that a bankrupt's wife held in trust for him a lease delivered to her by a corporation in which the bankrupt was a stockholder, and so a discharge could not be denied on the ground the bankrupt had concealed and failed to turn over to his trustee such lease.—In re Newmark, 349.

VI. APPEAL AND REVISION OF PROCEEDINGS.

(A) Superintendence and Revision.

⟹440 (U.S.C.C.A.Ohio) Question of liability of petitioning creditors for costs of receivership had in bankruptcy proceeding is a controversy arising in bankruptcy between such creditors and adverse interests, so an appeal, and not petition to revise, is proper remedy to review order relating thereto.—In re Veler, 543.

⟹440 (U.S.C.C.A.Pa.) Neither under Bankruptcy Act, § 24a nor section 25a, has Circuit Court of Appeals jurisdiction to review on appeal order of bankruptcy court concerning commitment of bankrupt for contempt for not complying with order to turn over to his trustee property belonging to bankrupt estate, but that question is reviewable only by petition to revise under section 24b.—Horton v. Mendelsohn, 221.

⟹444 (U.S.C.C.A.Ohio) Where questions as to distribution of fund derived from sale of all of bankrupt's property free from liens are involved, petitions to revise orders made therein disclose jurisdiction.—In re Veler, 543.

(B) Appeal.

⟹467 (U.S.C.C.A.Ill.) Where bankruptcy court on its own motion submitted to jury question of alleged bankrupt's insolvency, verdict of jury is merely advisory, and error is not predicable on court's remarks, or on its charge to jury.—Morrison v. Rieman, 149.

VII. COSTS AND FEES.

⟹474 (U.S.C.C.A.Ohio) In view of Bankruptcy Act, § 3e, petitioning creditors are not, where receiver acquired possession of bankrupt's property, liable for costs and expenses of receivership; bankrupt and creditors not having objected.—In re Veler, 543.

In view of Bankruptcy Act, § 64, when receivership ends and assets are turned over to trustee, expenses of receivership, which include lawful debts of receiver, are a charge on the assets.—Id.

Where receiver appointed to carry on business of bankrupt, and authorized to issue receiver's certificates, incurred other debts without authority, fund derived from sale of bankrupt's property is not liable for such unauthorized debts, and only recourse of such creditors is against receiver personally, and perhaps against his bond.—Id.

BANKS AND BANKING.

See Bankruptcy, ⟹163; Bills and Notes, ⟹339; Evidence, ⟹20, 354.

III. FUNCTIONS AND DEALINGS.

(B) Representation of Bank by Officers and Agents.

⟹109(1) (U.S.C.C.A.W.Va.) An officer of a bank, without express authority from the directors, has no power to bind the bank by an accommodation indorsement or guaranty.—Wagner v. Central Banking & Security Co., 197.

⟹117 (U.S.C.C.A.W.Va.) A bank, which discounted notes of officers of another bank, *held* chargeable with notice that the transaction was for the personal benefit of such officers, and not entitled to enforce an unauthorized guaranty by the latter bank.—Wagner v. Central Banking & Security Co., 197.

When the officers of a bank cross the dead line between the area of official representation and the area of their personal interest, to the knowledge of one with whom they are dealing, they leave all power of representation behind.—Id.

(C) Deposits.

⟹127 (U.S.C.C.A.N.Y.) In absence of any special agreement between depositors and bank, title to checks deposited will pass to bank, and it becomes merely debtor for amount thereof.—In re Jarmulowsky, 327.

(D) Collections.

⟹159 (U.S.C.C.A.N.Y.) Whether there was any special agreement taking deposit of checks out of general rule, under which title would have passed to bank and it would have become debtor to depositors for amount thereof, is question of fact.—In re Jarmulowsky, 327.

⟹165 (U.S.C.C.A.N.Y.) When a bank, collecting checks as agent for a depositor, gets the money on the checks, the relation of debtor and creditor arises.—In re Jarmulowsky, 327.

⟹166(2) (U.S.C.C.A.N.Y.) Where their passbooks provided that deposits of checks should not be drawn upon until collected, checks so deposited *held* to belong to depositors until collection; so, where checks were not collected until after receiver took charge of affairs of banker, depositors were entitled to proceeds as against receiver.—In re Jarmulowsky, 327.

BAPTISMAL RECORD.

See Army and Navy, ⟹40; Criminal Law, ⟹430, 441.

BAR.

See Judgment, ⟹564–721.

BEST AND SECONDARY EVIDENCE.

See Criminal Law, ⟹402.

BILL.

See Equity, ⟹141.

Digitized by Google

BILL OF EXCEPTIONS.

See Exceptions, Bill of.

BILL OF LADING.

See Carriers, ⚷52-94; Shipping, ⚷132, 142.

BILLS AND NOTES.

See Bankruptcy, ⚷76, 404; Banks and Banking, ⚷109, 117; Corporations, ⚷487; Judgment, ⚷721; Pledges, ⚷25.

IV. NEGOTIABILITY AND TRANSFER.

(B) Transfer by Indorsement.

⚷188 (U.S.C.C.A.N.Y.) Where checks deposited were indorsed in blank, any lawful direction might be written over the blank indorsement.—In re Jarmulowsky, 327.

V. RIGHTS AND LIABILITIES ON INDORSEMENT OR TRANSFER.

(D) Bona Fide Purchasers.

⚷339 (U.S.C.C.A.N.D.) Purchaser of assets of pledgor bank, to which plaintiff transmitted for collection notes pledged by such bank, *held* not entitled as a bona fide purchaser to notes which had been indorsed in blank as against plaintiff, for due diligence would have disclosed plaintiff's ownership.—Stockyards Nat. Bank of St. Paul, Minn., v. First Nat. Bank of Towner, N. D., 395.

BLANKS.

See Bills and Notes, ⚷188, 339.

BONA FIDE PURCHASERS.

See Bills and Notes, ⚷339; Carriers, ⚷59.

BONDS.

See Appeal and Error, ⚷485, 492; Bankruptcy, ⚷76, 474; Courts, ⚷356; Injunction, ⚷235; United States, ⚷67.

BOOKS.

See Evidence, ⚷155, 354.

BOUNTIES.

See Public Lands, ⚷46.

BRAKES.

See Master and Servant, ⚷142; Railroads, ⚷229.

BRIEFS.

See Appeal and Error, ⚷759, 773, 1079; Criminal Law, ⚷1130.

BROKERS.

VI. RIGHTS, POWERS, AND LIABILITIES AS TO THIRD PERSONS.

⚷94 (U.S.C.C.A.N.Y.) Broker, who for corporation negotiated sale of vacuum cleaners, with machinery and materials for their manufacture, is without authority to make representations that such cleaners had not previously been put on market.—Vulcan Metals Co. v. Simmons Mfg. Co., 7.

BUILDING CONTRACTS.

See Contracts, ⚷313; Damages, ⚷124.

BURDEN OF PROOF.

See Evidence, ⚷90, 94.

BY-LAWS.

See Partnership, ⚷264.

CANCELLATION OF INSTRUMENTS.

See Action, ⚷23; Appeal and Error, ⚷1046; Equity, ⚷39; Sales, ⚷418.

II. PROCEEDINGS AND RELIEF.

⚷32 (U.S.C.C.A.Mo.) A bill seeking to cancel a contract of sale on ground that it was obtained by fraud and deception, and that minds of the parties had never met, states a case for equitable relief.—Fay v. Hill, 389.

⚷58 (U.S.C.C.A.Mich.) Equity having jurisdiction of suit to cancel contract between complainant and defendant, giving defendant percentage of profits which were expected to result from complainant's acquisition of a leasehold, in which transaction defendant was interested, on ground that defendant concealed a profit received from the owner, may, for purpose of doing complete justice between the parties, decree a recovery of the sum concealed by defendant.—Reid v. Shaffer, 479.

CARMACK AMENDMENT.

See Carriers, ⚷177.

CARRIERS.

See Shipping, ⚷101-166; Trial, ⚷296.

I. CONTROL AND REGULATION OF COMMON CARRIERS.

(A) In General.

⚷4 (U.S.C.C.A.Miss.) An express company is a common carrier.—Taylor v. Wells Fargo & Co., 161.

(B) Interstate and International Transportation.

⚷37 (U.S.C.C.A.Mich.) Under Twenty-Eight Hour Law, allowing shippers to extend time of confinement to 36 hours, it is the established rule that time during which shipment of live stock is confined by connecting carrier shall be included in statutory period.—Grand Trunk Western Ry. Co. v. United States, 23.

Twenty-Eight Hour Law applies to shipment of cattle originating in Canada and brought into United States, and where railroad company confined them for period which, taken with the period of confinement in Canada, exceeded 36 hours, which period of confinement was requested by shipper, it is guilty of violation.—Id.

Digitized by Google

II. CARRIAGE OF GOODS.

(B) Bills of Lading, Shipping Receipts, and Special Contracts.

⚷52(1) (U.S.C.C.A.Mich.) Bill of lading is both receipt and contract of carriage and delivery.—King v. Barbarin, 311.

⚷56 (U.S.C.C.A.Mich.) Transfer of bill of lading, without indorsement and with intent to pass title, is constructive delivery of property which it represents.—King v. Barbarin, 311.

⚷59 (U.S.C.C.A.Mich.) Carrier, by delivering goods to consignee without production of bill of lading, becomes liable to bona fide holder of bill for value, whether by way of purchase or as security for advances before delivery of goods at destination.—King v. Barbarin, 311.

(D) Transportation and Delivery by Carrier.

⚷82 (U.S.C.C.A.Mich.) Though consignees were also named in bill of lading, as consignors, yet, where carrier acknowledged receipt of shipment not from consignors but from owners, consignees were only prima facie owners of goods shipped.—King v. Barbarin, 311.

⚷83 (U.S.C.C.A.Mich.) Delivery by carrier to consignee is made at carrier's peril, where consignee does not surrender bill of lading.—King v. Barbarin, 311.

Provision in bill of lading to notify one other than consignee does not warrant carrier in delivering shipment, save by order of lawful holder of bill of lading.—Id.

Actual indorsement by consignee of forged bill of lading affords carrier no more protection than would be given by delivery directly to consignee without production of any bill of lading.—Id.

Carriers *held* not warranted treating as owners consignees who were named in bill of lading as consignors, and in delivering property without production of bill of lading.—Id.

Where sellers of goods took back their dishonored draft, drawn on consignees who were named in bill of lading as consignors also, *held*, that they might recover; the carrier having delivered the shipment without production of original bill of lading.—Id.

⚷94(3) (U.S.C.C.A.Mich.) Presumption of ownership arising from bill of lading in which consignee was named as consignor may be rebutted by other evidence showing real ownership.—King v. Barbarin, 311.

(F) Loss of or Injury to Goods.

⚷117 (U.S.C.C.A.Miss.) Where railroad company made allowance of freight because consignee furnished its own tank car, company, exercising no right over car, except for limited purpose of transporting shipment, should not be treated as lessee, and expected to use same care as if car had been its own.—Alabama & V. Ry. Co. v. American Cotton Oil Co., 316.

⚷121 (U.S.C.C.A.Miss.) Where consignee of cotton oil furnished its own tank cars for shipment, and it was not apparent that inner valve in car had not been closed, railroad company, though bound to exercise high degree of care, cannot be held liable for loss of oil resulting from failure to securely close valve, notwithstanding outer cap might have prevented escape, had it not been defective.—Alabama & V. Ry. Co. v. American Cotton Oil Co., 316.

⚷121 (U.S.C.C.A.Miss.) Where seller of cotton seed oil loaded same in its own tank car, buyer cannot, having paid bill of lading with draft attached, recover against railroad company for loss of oil resulting from defect in car not discoverable by reasonable inspection, even though railroad company made seller, who was required by contract to deliver oil, allowance for use of car.—Alabama Great Southern R. Co. v. Morris & Co., 320.

⚷136 (U.S.C.C.A.Miss.) In action against railroad company for loss of cotton oil shipped in tank car furnished by consignee, question whether railroad company was negligent, or whether loss resulted from failure of shipper's servants to securely fasten inside valve of car, *held*, under evidence, for jury.—Alabama & V. Ry. Co. v. American Cotton Oil Co., 316.

(I) Connecting Carriers.

⚷177(3) (U.S.C.C.A.Mich.) Under Carmack Amendment, initial carrier of interstate shipment is liable for misdelivery by terminal carrier.—King v. Barbarin, 311.

(K) Discrimination and Overcharge.

⚷202 (U.S.C.C.A.Mo.) Where shipper has paid rate afterwards declared by Interstate Commerce Commission to be excessive, he may recover as damages difference between excessive rate and rate declared to be just and reasonable by Commission, without proof of actual injury.—Atchison, T. & S. F. Ry. Co v. Spiller, 587.

IV. CARRIAGE OF PASSENGERS.

(D) Personal Injuries.

⚷318(7) (U.S.C.C.A.N.Y.) Evidence *held* insufficient to sustain a verdict against a street railroad company for injury to passenger in collision with truck.—Third Ave. Ry. Co. v. Mills, 571.

CASUAL EMPLOYMENT.

See Master and Servant, ⚷362.

CERTIFICATE.

See Bankruptcy, ⚷345, 347.

CHANCERY.

See Equity.

CHARGE.

By carriers, see Carriers, ⚷202.
To jury, see Criminal Law, ⚷811-829; Trial, ⚷217-296.

CHARTER PARTIES.

See Admiralty, ⚷66; Maritime Liens, ⚷9; Shipping, ⚷58.

Digitized by Google

CHATTEL MORTGAGES.

See Appeal and Error, ⚷671, 907; Bankruptcy, ⚷213; Courts, ⚷359.

V. RIGHTS AND REMEDIES OF CREDITORS.

⚷190(2) (U.S.C.C.A.Kan.) Where owner of stock of goods sold same to bankrupt, taking chattel mortgage, which he promptly placed on record and reported to commercial agencies, mortgage, which provided for certain monthly payments to owner, must be deemed valid as against subsequent creditors of bankrupts; it appearing that owner at all times asserted and protected his rights.—Garrison v. Kurt, 582.

CHECKS.

See Banks and Banking, ⚷127, 159–166; Bills and Notes, ⚷188.

CHILDREN.

See Guardian and Ward; Parent and Child.

CHOSE IN ACTION.

See Assignments.

CITATION.

See Appeal and Error, ⚷397; Process.

CITIZENS.

See Indians.

CIVIL LAW.

See Evidence, ⚷81.

CLAIMS.

See Bankruptcy, ⚷314–347; Patents, ⚷101, 157–172.

CLERKS OF COURTS.

See Courts, ⚷356.

COLLATERAL ATTACK.

See Bankruptcy, ⚷100.

COLLATERAL SECURITY.

See Pledges.

COLLECTION.

See Banks and Banking, ⚷159–166.

COLLISION.

See Evidence, ⚷37; Statutes, ⚷290.

X. NARROW CHANNELS, HARBORS, RIVERS, AND CANALS.

⚷93 (U.S.C.C.A.N.Y.) While a ferryboat's occupation imposes additional duties upon vessels pursuing their lawful occasions near ferry slips, yet liability must be determined by the ordinary rules of navigation, where a collision between a ferryboat and another craft occurred 800 feet beyond the end of the ferry slip.—Carroll v. City of New York, 411.

⚷102 (U.S.C.C.A.N.Y.) A ferryboat and propeller, which collided, the former being struck on the starboard side, *held* both liable; the ferryboat for not promptly observing the propeller's lights, it having the right of way under the starboard hand rule, and the propeller in violating statutory requirements. So damages should be divided.—Carroll v. City of New York, 411.

XII. SUITS FOR DAMAGES.

(C) Evidence.

⚷123 (U.S.C.C.A.N.Y.) A vessel, proceeding in violation of statutory requirements at the time of a collision, to escape liability, must show such violation did not contribute to the collision.—Carroll v. City of New York, 411.

COLOR OF TITLE.

See Adverse Possession.

COMBINATIONS.

See Patents, ⚷246.

COMMERCE.

See Carriers; Criminal Law, ⚷59.

COMMERCIAL PAPER.

See Bills and Notes.

COMMON CARRIERS.

See Carriers; Shipping, ⚷101.

COMMON LAW.

See Evidence, ⚷81.

COMPETENCY.

See Evidence, ⚷155.

COMPULSORY SERVICE LAW.

See Army and Navy, ⚷40; Criminal Law, ⚷430, 431.

CONCLUSIVENESS.

See Judgment, ⚷564–721; Public Lands, ⚷106.

CONDEMNATION.

See Eminent Domain.

CONDITIONS.

See Deeds, ⚷173, 176; Eminent Domain, ⚷169; Landlord and Tenant, ⚷103.

CONFLICT OF LAWS.

See Gaming, ⚷2.

CONFORMITY ACT.

See Courts, ⚷340.

Digitized by Google

CONFUSION OF GOODS.

See Trusts, ⚷291, 305.

CONGRESS.

See Territories, ⚷11.

CONNECTING CARRIERS.

See Carriers, ⚷177.

CONSENT.

See Assignments, ⚷58; Bankruptcy, ⚷293; Courts, ⚷37; Exceptions, Bill of, ⚷43.

CONSOLIDATION.

See Patents, ⚷314.

CONSPIRACY.

See Criminal Law, ⚷59.

II. CRIMINAL RESPONSIBILITY.

(A) Offenses.

⚷28 (U.S.C.C.A.Wash.) Offense of conspiracy to commit crime may be consummated by doing of some overt act to effectuate purpose, although crime be not actually committed.—Billingsley v. United States, 339.

(B) Prosecution and Punishment.

⚷43(5) (U.S.C.C.A.Cal.) An indictment for conspiring to aid enemy aliens to escape from custody, into which they had been taken under the President's order for their arrest and confinement, which alleged several overt acts, is not defective because it did not set forth, verbatim or in substance, letters alleged as overt acts.—De Lacey v. United States, 535.

In an indictment for conspiracy, it is not necessary to show how the act charged to be an overt act would affect the objects of the conspiracy.—Id.

An indictment for conspiracy is sufficient, if some of the overt acts are properly pleaded.—Id.

⚷43(6) (U.S.C.C.A.Cal.) Under Criminal Code, § 141, indictment charging that defendants conspired to aid and abet certain persons held in custody as enemy aliens by virtue of an order for their arrest and confinement issued by President under Rev. St. §§ 4067–4070 (Comp. St. 1916, §§ 7615–7618) and public proclamation of a state of war between Germany and United States, is sufficient, though not alleging that persons in custody were alien enemies.—De Lacey v. United States, 535.

⚷43(12) (U.S.C.C.A.Cal.) Where several overt acts are charged in an indictment for conspiracy, it is not necessary to prove all of them.—De Lacey v. United States, 535.

⚷47 (U.S.C.C.A.Cal.) In prosecution under Criminal Code, §§ 37, 215, for conspiracy to devise scheme to defraud by using the mails, evidence *held* insufficient to show that defendant, who negotiated exchange of property between complaining witness and another, entered into any conspiracy to use mails in connection with scheme to defraud complaining witness.—Stubbs v. United States, 497.

CONSTRUCTION.

See Contracts, ⚷147–182; Deeds, ⚷173; Patents, ⚷157–172; Sales, ⚷61; Statutes, ⚷241, 245; Vendor and Purchaser, ⚷70; Wills, ⚷681.

CONSTRUCTIVE DELIVERY.

See Carriers, ⚷56.

CONSTITUTIONAL LAW.

Subjects and titles of statutes, see Statutes, ⚷112.

For validity of statutes relating to particular subjects, see also the various specific topics.

II. CONSTRUCTION, OPERATION, AND ENFORCEMENT OF CONSTITUTIONAL PROVISIONS.

⚷42 (U.S.C.C.A.Ky.) Contention that Acts 1898, c. 49 (Ky. St. § 4679c), authorizing condemnation by telegraph companies of easements over railroad rights of way, is invalid because of provision that no notice need be given any mortgagee, cannot be urged by railroad company, for one not injured cannot question constitutionality of law.—Louisville & N. R. Co. v. Western Union Telegraph Co., 359.

VII. OBLIGATION OF CONTRACTS.

(C) Contracts of Individuals and Private Corporations.

⚷163 (U.S.C.C.A.N.Y.) Congress, in the exercise of its constitutional power to establish systems of bankruptcy, may, and in fact always does, impair the obligation of contracts.—In re Franklin Brewing Co., 341.

XI. DUE PROCESS OF LAW.

⚷252 (U.S.C.C.A.Cal.) Alien Enemy Act, authorizing the restraint and the removal of alien enemies, is not invalid as depriving such persons of liberty without due process of law.—De Lacey v. United States, 535.

CONTEMPT.

See Appeal and Error, ⚷485, 492; Bankruptcy, ⚷440; Extradition, ⚷19; Jury, ⚷25.

II. POWER TO PUNISH, AND PROCEEDINGS THEREFOR.

⚷66(3) (U.S.C.C.A.Mo.) Where not raised in lower court, objection that evidence was insufficient to warrant finding that defendant was guilty of contempt and judgment imposing punishment cannot be raised on writ of error.—Couts v. United States, 521.

⚷66(6½) (U. S. C. C. A. Mo.) Where information charging contempt was not attacked in court below, and there was no assignment of error that it did not state facts sufficient to constitute a contempt, objections to information, which are not plain, but are of a technical character, cannot be considered under rule 11 (150 Fed. xxvii, 79 C. C. A. xxvii), allowing Circuit Court of Appeals to consider a plain error not assigned.—Couts v. United States, 521.

Digitized by Google

CONTEST.

See Public Lands, ⚷103.

CONTRACONCEPTIVES.

See Post Office, ⚷48, 49.

CONTRACTOR'S BONDS.

See United States, ⚷67.

CONTRACTS.

See Assignments; Banks and Banking, ⚷159; Bills and Notes; Cancellation of Instruments; Carriers, ⚷52; Chattel Mortgages; Constitutional Law, ⚷163; Damages, ⚷124; Frauds, Statute of; Gaming; Guardian and Ward, ⚷69, 131; Joint Adventures; Joint-Stock Companies, ⚷18; Landlord and Tenant; Master and Servant, ⚷62, 100; Novation; Parent and Child, ⚷9; Partnership; Payment; Sales; Shipping, ⚷104, 108, 153; Specific Performance; Stipulations; Telegraphs and Telephones, ⚷11; Towage, ⚷9; Vendor and Purchaser; Work and Labor.

I. REQUISITES AND VALIDITY.

(F) Legality of Object and of Consideration.

⚷108(2) (U.S.C.C.A.Mich.) Where defendant agreed that any patents for improvements or inventions which he might secure in a particular art should belong to his employer, such contract, though applying to a patent for an improvement in the art secured after defendant terminated his employment, is not invalid as opposed to public policy.—Wege v. Safe-Cabinet Co., 606.

⚷108(2) (U.S.C.C.A.Tex.) Where, after Galveston flood, great quantity of cotton was washed from island of Galveston to mainland, agreement entered into by defendant, who was owner of 1,000 bales of cotton, to pay plaintiff $10 per bale for each bale he reclaimed, *held* not unlawful and void, as against good morals and public policy, or as tending to interfere with public justice.—Moller v. Herring, 528.

II. CONSTRUCTION AND OPERATION.

(A) General Rules of Construction.

⚷147(3) (U.S.C.C.A.Mich.) In construing a contract, the intent of the parties is to be gathered from the entire contract and all the circumstances of the case.—Reid v. Shaffer, 479.

⚷152 (U.S.C.C.A.Mich.) The language of a contract itself must control, unless the parties themselves have placed a practical construction upon it to the contrary.—Wege v. Safe-Cabinet Co., 606.

⚷175(1) (U.S.C.C.A.N.Y.) Where the parties to a contract have had previous dealings of the same character, it is presumed that they contract with reference to such prior course of dealing.—Munson S. S. Line v. Grimwood, 632.

(B) Parties.

⚷182(1) (U.S.C.C.A.Ohio) Agreement between liquor salesmen and corporation entered into when salesmen became stockholders, whereby each agreed to assume one-half of loss which might be sustained on accounts transferred to corporation for merchandise shipped to respective customers of each, must be deemed several, instead of joint, and not to render each salesman liable for losses on account of sales made by his associates.—Ulman v. Manheimer, 601.

III. MODIFICATION AND MERGER.

⚷247 (U.S.C.C.A.N.Y.) In action on contract, where defendant at trial set up new and separate agreement, alleged to have been orally made, modifying the original contract, instead of the denial pleaded in answer, burden of proving oral agreement was on defendant.—Cowen Co. v. Houck Mfg. Co., 293.

V. PERFORMANCE OR BREACH.

⚷313(2) (U.S.C.C.A.Ill.) The action of an owner in refusing to make monthly payments as provided by a building contract *held* a renunciation, which justified the contractor in abandoning the contract and suing for its breach.—Knotts v. Clark Const. Co., 217.

CONVEYANCES.

See Deeds; Mortgages.

COPY.

See Bankruptcy, ⚷243; Criminal Law, ⚷430, 441.

COPYRIGHTS.

I. NATURE AND ACQUISITION.

⚷12 (U.S.C.C.A.N.Y.) Where purchaser of song, having copyrighted it with consent of composer, prepared and copyrighted orchestral score, purchaser is entitled to protection of copyright for score, as it was substantially new and independent composition, and represented original work, supporting independent copyright.—Edmonds v. Stern, 15.

II. TITLE, CONVEYANCES, CONTRACTS, AND REGULATIONS.

⚷47 (U.S.C.C.A.N.Y.) Where defendants copyrighted a song sold to them on royalty basis, and with consent of composer prepared and copyrighted orchestral score, composer is not, defendants having assigned to him copyright of song in settlement of controversy between them, entitled to any rights in orchestral score, which were not assigned.—Edmonds v. Stern, 15.

Where composer of song sold it to defendants on royalty basis, and after copyrighting song they prepared and copyrighted orchestral score with composer's consent, composer is not, by reason of assignment of copyright of song, entitled to any rights in score, which were not assigned to him; two copyrights being entirely distinct.—Id.

CORPORATIONS.

See Bankruptcy, ⚷145, 293; Banks and Banking; Carriers; Evidence, ⚷155, 234; Internal Revenue, ⚷2, 25, 28, 38; Limitation of Actions, ⚷66; Partnership, ⚷139, 264;

Digitized by Google

Railroads; Receivers, ⟹58, 170; Street Railroads; Telegraphs and Telephones; Wills, ⟹860.

IV. CAPITAL, STOCK, AND DIVIDENDS.

(B) Subscription to Stock.

⟹89(1) (U.S.C.C.A.Ariz.) Where corporate stock was issued without subscription, the stockholders are liable to assessment, just as if they had been subscribers.—In re Phœnix Hardware Co., 384.

(D) Transfer of Shares.

⟹123(16) (U.S.C.C.A.Ohio) In suit to recover surplus after sale of corporate stock alleged to have been held as security, where there was general verdict for plaintiff, but certain dividends claimed were denied, denial cannot be deemed special finding inconsistent with general verdict, where it was doubtful whether defendant ever received dividends, and it appeared that plaintiff's counsel, after argument, attempted to withdraw claim to dividends.—Ulman v. Manheimer, 601.

V. MEMBERS AND STOCKHOLDERS.

(C) Suing or Defending on Behalf of Corporation.

⟹209 (U.S.C.C.A.W.Va.) Bill in stockholders' suit *held* to disclose such laches on its face, in connection with the discovery called for, as to warrant its dismissal.—Whitaker v. Whitaker Iron Co., 457.

⟹210 (U.S.C.C.A.N.C.) Dismissal of bill in stockholder's suit for nonjoinder of parties *held* error, under Equity rule 39 (198 Fed. xxix, 115 C. C. A. xxix), and Judicial Code, § 50.—Krouse v. Brevard Tannin Co., 464.

⟹211(6) (U.S.C.C.A.N.C.) Equity rule 27 (198 Fed. xxv, 115 C. C. A. xxv), prescribing jurisdictional requisites of stockholder's bill, construed.—Krouse v. Brevard Tannin Co., 464.

A stockholder's bill *held* to state facts sufficient to entitle complainants, as minority stockholders, to invoke the jurisdiction of a court of equity.—Id.

⟹211(6) (U.S.C.C.A.W.Va.) A bill filed by complainants as stockholders against the corporation and others *held* to state no cause of action.—Whitaker v. Whitaker Iron Co., 457.

(D) Liability for Corporate Debts and Acts.

⟹228 (U.S.C.C.A.Ariz.) A corporation's unpaid subscriptions are a trust fund for benefit of general creditors of corporation.—In re Phœnix Hardware Co., 384.

⟹232(1) (U.S.C.C.A.Ariz.) Organizers of corporation, who exchanged goods for capital stock, are, value of goods being much less than par value of stock, liable to general creditors for difference, though transaction, as between themselves and corporation, could not be questioned.—In re Phœnix Hardware Co., 384.

⟹246 (U.S.C.C.A.Ariz.) The liability of a subscriber for the capital stock of a corporation is several, and not joint.—In re Phœnix Hardware Co., 384.

⟹268(5) (U.S.C.C.A.Ariz.) Where petition, seeking to assess outstanding capital stock on theory that it had not been fully paid in, alleged that holders were subscribers, and proof showed that stock was issued without subscription, variance was immaterial; liability of stockholders being same in each case.—In re Phœnix Hardware Co., 384.

VII. CORPORATE POWERS AND LIABILITIES.

(A) Extent and Exercise of Powers in General.

⟹379 (U.S.C.C.A.Hawaii) Where corporations are by law authorized to form copartnerships, each corporate member of such a firm is liable as a partner to third persons.—Haiku Sugar Co. v. Johnstone, 155.

Where corporations are allowed by law to form ordinary partnerships with other corporations, it is an incident of such right that representatives of the corporate members can for convenience be selected to manage the firm.—Id.

(B) Representation of Corporation by Officers and Agents.

⟹406(3) (U.S.C.C.A.Pa.) That secretary and treasurer of corporation was in charge of its office and accounts does not show that he was empowered to accept partial assignment of debt due by corporation in absence of evidence that he was so held out.—Sheatz v. Markley, 323.

⟹426(2) (U.S.C.C.A.Pa.) Where secretary and treasurer of corporation was not capable of binding corporation by assenting to partial assignment, he could not bind it by purporting to ratify his unauthorized act.—Sheatz v. Markley, 323.

⟹426(9) (U.S.C.C.A.Tex.) Where president of corporation, who had charge of its buying and selling, purchased machinery, and such machinery was installed by corporation, and part of price paid in accordance with terms of contract, there was ratification of president's act.—Reeves v. York Engineering & Supply Co., 439.

(D) Contracts and Indebtedness.

⟹487(2) (U.S.C.C.A.Ark.) In action by bank on note of corporation, indorsed by another, where it was contended that note was ultra vires and that it was delivered without consideration, corporation having received from original and primary debtors, who used note, full satisfaction of amount, is not entitled to urge defense of ultra vires.—Burke Brick Co. v. First Nat. Bank, 533.

VIII. INSOLVENCY AND RECEIVERS.

⟹556 (U.S.C.C.A.Pa.) Where court appointing receiver of financially embarrassed corporation had jurisdiction of subject-matter and corporation, stockholder cannot merely by virtue of his interest as such intervene and attack appointment.—Scattergood v. American Pipe & Construction Co., 83.

⟹557(½) (U.S.C.C.A.Pa.) Bill seeking appointment of corporate receiver should be dismissed by court on its own motion, when it appears that court is without jurisdiction, regardless of how knowledge of that fact may

Digitized by Google

be acquired.—Scattergood v. American Pipe & Construction Co., 83.

COSTS.

See Bankruptcy, ⚷440, 474; Internal Revenue, ⚷38.

VI. TAXATION.

⚷197 (U.S.C.C.A.La.) Where, pending appeal from order enjoining sale under statutory foreclosure proceedings in state court, settlement was effected, question of costs in state court will be left for that tribunal on dismissal of the appeal.—Clark v. Fairbanks, 405.

VII. ON APPEAL OR ERROR, AND ON NEW TRIAL OR MOTION THEREFOR.

⚷232 (U.S.C.C.A.La.) Where by reason of settlement questions involved in appeal from injunction order have become moot, costs must be assessed against appellant in sustaining motion to dismiss.—Clark v. Fairbanks, 405.

COURT RULES CITED.

Equity Rule 22.—389.
Equity Rules 27, 29, 39.—464.

COURTS.

I. NATURE, EXTENT, AND EXERCISE OF JURISDICTION IN GENERAL.

⚷37 (U.S.C.C.A.Ill.) Jurisdiction of a federal court of an action by a railroad employé to recover for an injury, as one arising under Employers' Liability Act, cannot be conferred by consent, irrespective of the facts.—Chicago & A. R. Co. v. Allen, 288.

VII. UNITED STATES COURTS.

(A) Jurisdiction and Powers in General.

⚷262(3) (U.S.C.C.A.Pa.) In view of the power exercised by Pennsylvania state courts, federal District Court for Pennsylvania *held* to have authority to appoint temporary receiver for New Jersey corporation in financial difficulties, where its principal business was being carried on in Pennsylvania.—Scattergood v. American Pipe & Construction Co., 83.

⚷263 (U.S.C.C.A.Pa.) Where federal District Court had jurisdiction of subject-matter warranting appointment of receiver of embarrassed corporation, it had authority to decide all questions arising therein, and its rulings could be questioned only by those properly parties.—Scattergood v. American Pipe & Construction Co., 83.

⚷276 (U.S.C.C.A.Pa.) Where petition for appointment of receiver of foreign corporation was filed in federal District Court for state wherein it was doing its principal business, corporation's voluntary appearance and filing of answer cured any objections on ground of want of jurisdiction of its person.—Scattergood v. American Pipe & Construction Co., 83.

(E) Procedure, and Adoption of Practice of State Courts.

⚷340 (U.S.C.C.A.Ohio) Conformity Act (U. S. Comp. St. 1916, § 1537) does not make state rules of procedure applicable to bankruptcy courts, practice and procedure of those courts being prescribed by the Bankruptcy Act, and general orders and regulations pursuant thereto; so one creditor, within Bankruptcy Act, may join as petitioning creditor, though not real party in interest under state practice.—In re Veler, 543.

⚷347 (U.S.C.C.A.N.C.) Motion to dismiss a bill for want of equity appearing on its face, made under equity rule 29 (198 Fed. xxvi, 115 C. C. A. xxvi), whether before or after answer, must be decided on allegations of the bill alone.—Krouse v. Brevard Tannin Co., 464.

⚷356 (U.S.C.C.A.N.Y.) Act June 12, 1917, § 1, which makes appropriation for fees of clerks, provided that courts of United States shall be open to seamen without furnishing bond, or prepayment of or making deposit to secure fees or costs, does not apply to prosecution of appeals in Circuit Court of Appeals; clerk of that tribunal having stated salary, appropriation for which was made by Act March 3, 1917, § 1.—The Nigretia, 356.

(F) State Laws as Rules of Decision.

⚷359 (U.S.C.C.A.Kan.) The question of the validity of a chattel mortgage given by bankrupts is one of local law.—Garrison v. Kurt, 582.

⚷366(13) (U.S.C.C.A.N.Y.) Decision of the highest state court, construing local limitation statutes as to actions for wrongful death, though contrary to previous decisions of inferior courts, is binding on the federal courts.—Farley v. Carey Show Print Co., 434.

⚷372(1) (U.S.C.C.A.N.Y.) On questions of general commercial law, decisions of state courts are not controlling in federal courts, but rules enunciated by various national courts should be applied.—In re Jarmulowsky, 327.

VIII. CONCURRENT AND CONFLICTING JURISDICTION, AND COMITY.

(B) State Courts and United States Courts.

⚷505 (U.S.C.C.A.Pa.) In suit against executor in federal court, *held* that, on decree directing accounting for trust property commingled by executor's testator with his own funds, execution should not in first instance issue while administration in state court is pending.—Alexander v. Fidelity Trust Co., 61.

COVENANTS.

See Injunction, ⚷62; Landlord and Tenant, ⚷103.

CREDIBILITY.

See Appeal and Error, ⚷994; Criminal Law, ⚷742.

Digitized by Google

CRIMINAL LAW.

See Army and Navy, ⚷40; Conspiracy; Contempt, ⚷66; Extradition; Indians, ⚷38; Indictment and Information; Perjury; Poisons; Post Office; Witnesses.

I. NATURE AND ELEMENTS OF CRIME AND DEFENSES IN GENERAL.

⚷37 (U.S.C.C.A.Wis.) The government *held* not entitled to maintain an indictment against a defendant for selling liquor to an Indian, in violation of Rev. St. § 2139 (Comp. St. 1916, § 4136a), and Act Jan. 30, 1897, § 1, when by its own conduct, through its agents, it misled him into believing that the act was lawful.—Voves v. United States, 227.

III. PARTIES TO OFFENSES.

⚷59(1) (U.S.C.C.A.Wash.) In view of Pen. Code, § 332 (Comp. St. 1916, § 10506), defendants, where they conspired with agents of common carrier to violate section 238 (Comp. St. 1916, § 10408), relating to delivery of interstate shipments of intoxicants, are indictable as principals, though they were not agents or employés of any railroad or common carrier.—Billingsley v. United States, 339.

IX. ARRAIGNMENT AND PLEAS, AND NOLLE PROSEQUI OR DISCONTINUANCE.

⚷274 (U.S.C.C.A.Wash.) Granting leave to withdraw pleas of guilty and enter pleas of not guilty to an indictment is discretionary with trial court.—Billingsley v. United States, 339.

X. EVIDENCE.

(C) Other Offenses, and Character of Accused.

⚷369(1) (U.S.C.C.A.N.Y.) In prosecution for unlawful sale of narcotics in violation of Harrison Act, which sale occurred at point far distant from defendant's residence, evidence that defendant was engaged in business of dispensing narcotics at his residence *held* admissible, and not subject to attack as disclosing other offenses.—Hammer v. United States, 344.

⚷371(1) (U.S.C.C.A.Ohio) Where question involved is defendant's intent, evidence of an act having a direct bearing on intent is admissible, though the act be a separate offense.—Edwards v. United States, 596.

(E) Best and Secondary and Demonstrative Evidence.

⚷402(2) (U.S.C.C.A.N.Y.) Where defendant testified that in response to subpœna duces tecum he had produced all correspondence before grand jury, and asserted that he did not receive decoy letters, in response to which it was contended he deposited in mails nonmailable matter, secondary evidence of such decoy letters was properly received, though government served no notice to produce.—Pilson v. United States, 336.

(F) Admissions, Declarations, and Hearsay.

⚷419, 420(1) (U.S.C.C.A.Mass.) Where a witness stated that he was not in the secrets of the grand jury room, cross-examination as to whether certain property generally described in indictment was produced before grand jury was properly excluded, for it would be mere inference or hearsay.—Feener v. United States, 399.

(H) Documentary Evidence and Exclusion of Parol Evidence Thereby.

⚷430 (U.S.C.C.A.Cal.) In prosecution for failing to register in accordance with Selective Draft Act May 18, 1917, baptismal records, certified copy of application for pension, and application for homestead executed by defendant's mother, wherein she set out his age, are admissible in evidence.—Phelan v. United States, 103.

Under Rev. St. § 882 (Comp. St. 1916, § 1494), providing for admission of copies of records of executive departments, certified copies of applications which are part of record of Pension Bureau are admissible in evidence.—Id.

⚷441 (U.S.C.C.A.Cal.) In prosecution for failing to register in accordance with Selective Draft Act May 18, 1917, baptismal records, certified copy of application for pension, and application for homestead executed by defendant's mother, wherein she set out his age, are admissible in evidence.—Phelan v. United States, 103.

XII. TRIAL.

(A) Preliminary Proceedings.

⚷631(4) (U.S.C.C.A.S.C.) It is within powers of District Court to make and enforce in criminal cases less than capital a rule prohibiting the furnishing of a list of jurors to the defendant more than two days prior to the term.—Hendrikson v. United States, 94.

(E) Arguments and Conduct of Counsel.

⚷730(1) (U.S.C.C.A.Cal.) Improper argument of prosecutor is no ground for reversal, where jury were explicitly directed to disregard it.—Phelan v. United States, 103.

(F) Province of Court and Jury in General.

⚷742(1) (U.S.C.C.A.Minn.) Jury is sole judge of credibility of witnesses.—Harris v. United States, 101.

(G) Necessity, Requisites, and Sufficiency of Instructions.

⚷811(4) (U.S.C.C.A.Okl.) A charge on reasonable doubt, which singled out and emphasized a particular matter, though it was not vital to case, was properly refused.—Dosset v. United States, 20.

⚷814(5) (U.S.C.C.A.Ohio) In a prosecution for using mails in connection with a scheme to defraud, whereby defendant sold as acetyl salicylic acid a compound containing acetanilid, without labeling it as required by Pure Food and Drug Act, instruction allowing jury to consider that fact, though, as sales were intrastate, act had no application, was proper on question of intent to defraud, and not erro-

Digitized by Google

neous as allowing jury to consider another offense.—Edwards v. United States, 596.

⚷822(18) (U.S.C.C.A.Okl.) In prosecution for introducing liquors into part of Oklahoma formerly Indian Territory, where defendant, who, with companions, motored into state, claimed liquor which he placed in car was consumed before state line was reached, and that liquor found was placed in machine by others, charge that only that found in state of Oklahoma should be considered could not, read in connection with other portions of charges, be deemed to have excluded defendant's theory or evidence.—Dosset v. United States, 20.

(H) Requests for Instructions.

⚷829(1) (U.S.C.C.A.Okl.) The refusal of a requested charge, fully and accurately covered by general charge, is proper.—Dosset v. United States, 20.

XV. APPEAL AND ERROR, AND CERTIORARI.

(B) Presentation and Reservation in Lower Court of Grounds of Review.

⚷1043(2) (U.S.C.C.A.N.Y.) Though indictment, charging that defendant deposited in mails letter and circular giving information as to obtaining of contra-conceptives, was attacked for lack of reasonable certainty, objection that circular was not set out in extenso was not raised, so as to justify review, since, if that was the basis of objection, it should have been stated more definitely.—Pilson v. United States, 336.

(D) Record and Proceedings Not in Record.

⚷1090(8) (U.S.C.C.A.La.) The sufficiency of the evidence to sustain a conviction cannot be reviewed on writ of error, in the absence of exceptions and a bill of exceptions incorporating therein the evidence.—Gregorat v. United States, 428.

⚷1128(1) (U.S.C.C.A.La.) In prosecution under Act June 1906, § 23, for knowingly giving false testimony in naturalization proceeding, question whether it was error for court in its charge to jury to incorporate that section of Criminal Code defining perjury cannot be reviewed on writ of error, where facts developed by evidence were not shown by record.—Gregorat v. United States, 428.

(E) Assignment of Errors and Briefs.

⚷1130(2) (U.S.C.C.A.Minn.) Assignments of error, not set out in plaintiff in error's brief as required by rule 24 (150 Fed. xxxiii, 79 C. C. A. xxxiii), cannot be considered.—Harris v. United States, 101.

(G) Review.

⚷1149 (U.S.C.C.A.Wash.) Discretion of trial court in granting leave to withdraw pleas of guilty and enter pleas of not guilty to indictment is not reviewable.—Billingsley v. United States, 339.

⚷1169(3) (U.S.C.C.A.La.) In a prosecution for knowingly giving false testimony in a naturalization proceeding, the admission of a transcript of the stenographer's notes of the proceeding was harmless, where defendant himself testified to the same facts shown by the transcript.—Gregorat v. United States, 428.

CROSS-EXAMINATION.

See Witnesses, ⚷269.

CROSSINGS.

See Railroads, ⚷301-350.

CUSTODIA LEGIS.

See Bankruptcy, ⚷144.

CUTTING TIMBER.

See Trespass, ⚷20.

DAMAGES.

See Admiralty, ⚷73; Appeal and Error, ⚷269, 719; Eminent Domain, ⚷108-138; Evidence, ⚷533; Sales, ⚷418; Shipping, ⚷58, 108.

VI. MEASURE OF DAMAGES.

(C) Breach of Contract.

⚷124(3) (U.S.C.C.A.Ill.) The measure of damages recoverable for breach of a building contract, where owner refused to make progress payments as agreed, is the outlay reasonably incurred by the contractor, regardless of profit in full performance.—Knotts v. Clark Const. Co., 217.

DEATH.

See Courts, ⚷366; Joint-Stock Companies, ⚷23.

II. ACTIONS FOR CAUSING DEATH.

(A) Right of Action and Defenses.

⚷31(3) (U.S.C.C.A.Canal Zone) Where no law of Canal Zone gave right of action to personal representatives of deceased person, personal representative can maintain no action for wrongful death.—Lebert v. Pacific Mail S. S. Co., 357.

(D) Pleading and Evidence.

⚷69 (U.S.C.C.A.Tex.) While recovery by parent for death of child is compensatory parent may show that he educated child under agreement that child should return advances, though agreement was unenforceable as contract.—Southwestern Gas & Electric Co. v. Thomas, 333.

(E) Damages, Forfeiture, or Fine.

⚷99(3) (U.S.C.C.A.Tex.) Award of $5.000 in favor of parents for death of their minor child *held*, under circumstances, not excessive.—Southwestern Gas & Electric Co. v. Thomas, 333.

DEBT, ACTION OF.

See Internal Revenue, ⚷28.

DEBTOR AND CREDITOR.

See Bankruptcy; Banks and Banking, ⚷165; Chattel Mortgages, ⚷190.

Digitized by Google

DECEDENTS.

See Executors and Administrators; Wills.

DECEIT.

See Fraud.

DECLARATIONS.

See Evidence, ⚷271.

DECOY LETTERS.

See Criminal Law, ⚷402.

DEEDS.

See Mortgages.

I. REQUISITES AND VALIDITY.

(C) Execution.

⚷49 (U.S.C.C.A.Ky.) Deed calling for execution by three persons as grantors, and deposited, together with purchase price, with third party, after its execution by two of them, to await other signature, is incomplete as to all, and later deed to another person, executed and delivered by three grantors, will have priority.—Raydure v. Lindley, 585.

Where condition that deed should be executed by three persons as grantors was imposed not merely by grantee, but by two grantors, who executed instrument, grantee cannot complete his title by waiving execution by third grantor or taking possession of land, though such third grantor had no legal interest in property.—Id.

III. CONSTRUCTION AND OPERATION.

(E) Conditions and Restrictions.

⚷173 (U.S.C.C.A.Mich.) Where grantor subdivided his lands and disposed of them to numerous grantees, and several deeds all contained restrictions, in nature of condition subsequent, allowing grantor to re-enter in event of breach, restriction must be deemed for benefit of several grantees and can be enforced by them though grantor had lost his right of reentry.—Crocker v. Ingersoll Engineering & Constructing Co., 91.

⚷176 (U.S.C.C.A.Mich.) Running of limitations against right of grantor to enforce a restrictive condition subsequent does not show that grantor had freed his property from incumbrance of restriction where it was enforceable by other grantees of same grantor, whose number exceeded 100, for limitations available against grantor might well not be available against all of them.—Crocker v. Ingersoll Engineering & Constructing Co., 91.

DEFICIENCY JUDGMENT.

See Bankruptcy, ⚷334.

DELAY.

See Patents, ⚷125.

DELIVERY.

See Carriers, ⚷56, 82-94; Sales, ⚷201.

DEMAND.

See Jury, ⚷25.

DEMURRER.

See Equity, ⚷220; Trial, ⚷11.

DEPOSITS.

See Banks and Banking, ⚷127, 159-166; Payment, ⚷12.

DESCENT AND DISTRIBUTION.

See Executors and Administrators; Wills.

DESIGN PATENTS.

See Patents, ⚷15.

DIRECTING VERDICT.

See Appeal and Error, ⚷927.

DIRECTORS.

See Bankruptcy, ⚷145.

DISCHARGE.

See Bankruptcy, ⚷404-414.

DISCRETION OF COURT.

See Admiralty, ⚷66; Bankruptcy, ⚷84; Criminal Law, ⚷274, 1149; Eminent Domain, ⚷232.

DISMISSAL AND NONSUIT.

See Appeal and Error, ⚷70, 257, 773-781; Corporations, ⚷209, 210; Costs, ⚷232; Equity, ⚷362, 363; Exceptions, Bill of, ⚷43; Trial, ⚷11.

DISSOLUTION.

See Joint-Stock Companies, ⚷23; Partnership, ⚷264.

DISTRICT AND PROSECUTING ATTORNEYS.

See Criminal Law, ⚷730.

DIVIDENDS.

See Corporations, ⚷123; Bankruptcy, ⚷145, 293; Internal Revenue, ⚷7.

DOCKETS.

See Trial, ⚷11.

DOCUMENTS.

See Admiralty, ⚷73; Criminal Law, ⚷430, 441; Evidence, ⚷354, 383.

DOUBLE PATENTING.

See Patents, ⚷15.

Digitized by Google

DRAFT LAW.

See Army and Navy, ⚷40; Criminal Law, ⚷430, 441.

DRAMSHOPS.

See Intoxicating Liquors.

DRAWINGS.

See Patents, ⚷167.

DROWNING.

See Landlord and Tenant, ⚷167.

DUE PROCESS OF LAW.

See Constitutional Law, ⚷252.

DURESS.

See Frauds, Statute of, ⚷119.

EASEMENTS.

See Constitutional Law, ⚷42; Eminent Domain, ⚷47-232, 321; Jury, ⚷19.

EDUCATION.

See Death, ⚷69.

EJECTMENT.

See Wills, ⚷681.

III. PLEADING AND EVIDENCE.

⚷88 (U.S.C.C.A.W.Va.) Rulings on the admissibility of evidence on trial of an action of ejectment without a jury affirmed.—McCormick v. Provident Life & Trust Co. of Philadelphia, 193.

⚷93 (U.S.C.C.A.W.Va.) Findings of the court on the trial of an action of ejectment without a jury affirmed.—McCormick v. Provident Life & Trust Co. of Philadelphia, 193.

ELECTION.

See Wills, ⚷787.

ELECTRICITY.

⚷19(3) (U.S.C.C.A.La.) In an action against a telephone company for damages for the burning of plaintiff's property in which the company's wires were located, the rule of ipsa loquitur does not relieve plaintiff from the burden of showing negligence.—Paine v. Cumberland Telephone & Telegraph Co., 435.

EMINENT DOMAIN.

See Constitutional Law, ⚷42; Evidence, ⚷533; Jury, ⚷19; States, ⚷9; Statutes, ⚷112.

I. NATURE, EXTENT, AND DELEGATION OF POWER.

⚷20(1) (U.S.C.C.A.Okl.) Act Feb. 28, 1902, and Act May 27, 1908, relating to Indian lands, are not a grant of authority to railroads, engaged or organized to engage in interstate commerce, to appropriate private property in the state of Oklahoma, but are limited to Indian lands.—Oklahoma, K. & M. I. Ry. Co. v. Bowling, 518.

⚷47(3) (U.S.C.C.A.Ky.) As Acts 1898, c. 49 (Ky. St. § 4679c), authorizing telegraph companies to condemn easements over railroad rights of way, allows judgment only for so much land as may be necessary, some measure or degree of necessity must exist before right of condemnation matures.—Louisville & N. R. Co. v. Western Union Telegraph Co., 359.

Question of necessity of taking is legislative one, and necessity cannot be declared by telegraph companies, asserting right to condemn easement over railroad right of way, pursuant to Kentucky statutes.—Id.

In view of Acts 1898, c. 49, §§ 4, 5 (Ky. St. § 4679c, subds. 4, 5), relating to condemnation by telegraph companies of easements for their lines over railroad rights of way, condemnation cannot be denied, because partial interference with operation of railroad will result from taking.—Id.

II. COMPENSATION.

(B) Taking or Injuring Property as Ground for Compensation.

⚷108 (U.S.C.C.A.Ky.) Where telegraph company, under Acts 1898, c. 49 (Ky. St. § 4679c), condemns easement over railroad right of way for its telegraph line, railroad company is entitled to damages for any interference with its own telegraph lines.—Louisville & N. R. Co. v. Western Union Telegraph Co., 359.

Where telegraph company, which constructed its line on railroad right of way under contract, by injunction restrained railroad company from removing line after termination of contract, *held* that, on condemnation under Acts 1898, c. 49 (Ky. St. § 4679c), fact that railroad company was forced to construct its own telegraphic line in less advantageous place should be considered.—Id.

In proceeding by telegraph company to condemn easement for its line over railroad right of way pursuant to Acts 1898, c. 49 (Ky. St. § 4679c), elements of damage, consisting of all diminution in value of use of remainder of right of way and expenses to which railroad company might be subjected, stated.—Id.

⚷120 (U.S.C.C.A.Ky.) Use by railroad company of its right of way for construction and maintenance of its own telegraph, telephone, and electric signal lines, is one for railroad purposes, as modern railways cannot operate without such contrivances.—Louisville & N. R. Co. v. Western Union Telegraph Co., 359.

(C) Measure and Amount.

⚷128(1) (U.S.C.C.A.Ky.) As telegraph company, condemning easement over railroad right of way under Acts 1898, c. 49 (Ky. St. § 4679c), takes its easement subject to duty of removing its line in case it is necessary to prevent interference with railroad operations, that fact should be taken into consideration in assessment of damages, and diminution of damages cannot be avoided on ground that offer of telegraph company to so take its line was promis-

Digitized by Google

sory only.—Louisville & N. R. Co. v. Western Union Telegraph Co., 359.

On condemnation by telegraph company of easement over railroad right of way, under Acts 1898, c. 49 (Ky. St. § 4679c), *held*, that railroad company could not be restricted to nominal damages on theory that easement was ambulatory; telegraph company, by reason of previous contract between companies and litigation, having secured most advantageous route. —Id.

⟹138 (U.S.C.C.A.Ky.) Under Acts 1898, c. 49 (Ky. St. § 4679c), where telegraph company condemns right of way over railroad property, value of land taken for poles should be computed on basis of injury to remainder, as easement is subject to be shifted.—Louisville & N. R. Co. v. Western Union Telegraph Co., 359.

III. PROCEEDINGS TO TAKE PROPERTY AND ASSESS COMPENSATION.

⟹169 (U.S.C.C.A.Ky.) Provision in Acts 1898, c. 49, § 1 (Ky. St. § 4679c, subd. 1), that, on condemnation of easement for telegraph line over railroad right of way, such line shall be constructed so as not to interfere with ordinary use of railroad, does not express condition precedent to condemnation, but continuing condition.—Louisville & N. R. Co. v. Western Union Telegraph Co., 359.

⟹207 (U.S.C.C.A.Ky.) On condemnation by telegraph company, under Acts 1898, c. 49 (Ky. St. § 4679c), of easement over railroad right of way, damages should be awarded as a unit.—Louisville & N. R. Co. v. Western Union Telegraph Co., 359.

⟹232 (U.S.C.C.A.Ky.) Acts 1898, c. 49 (Ky. St. § 4679c), providing for condemnation by telegraph companies of easements over railroad rights of way, which declares that jury shall not be required to go upon or view such right of way, is not open to attack on ground that view of property was not permitted, but that question must be deemed to have been left to discretion of court.—Louisville & N. R. Co. v. Western Union Telegraph Co., 359.

⟹262(5) (U.S.C.C.A.Ky.) Where it would have been duty of court to have directed verdict on an issue in condemnation proceeding, refusal of court to submit that issue to jury was harmless, though erroneous.—Louisville & N. R. Co. v. Western Union Telegraph Co., 359.

V. TITLE OR RIGHTS ACQUIRED.

⟹321 (U.S.C.C.A.Ky.) Under Acts 1898, c. 49 (Ky. St. § 4679c), telegraph company condemning easement over railroad right of way, takes it subject to duty of removing line in event railroad necessity requires.—Louisville & N. R. Co. v. Western Union Telegraph Co., 359.

Under Acts 1898, c. 49 (Ky. St. § 4679c), question whether telegraph company should remove its line from easement condemned over railroad right of way, on account of interference with operation of railroad company, should be determined in good faith by railroad company as if telegraph line were its own.—Id.

EMPLOYERS AND EMPLOYÉS.

See Master and Servant.

EMPLOYERS' LIABILITY ACTS.

See Courts, ⟹37; Master and Servant, ⟹100.

ENEMIES.

See Conspiracy, ⟹43; Constitutional Law, ⟹252.

ENTRAPMENT.

See Criminal Law, ⟹37.

ENTRY, WRIT OF.

See Ejectment.

EQUITY.

See Action, ⟹23; Appeal and Error, ⟹724, 1009, 1046; Bankruptcy, ⟹287; Cancellation of Instruments; Corporations, ⟹210, 211; Courts, ⟹262, 347; Injunction; Joint Adventures, ⟹5; Patents, ⟹311-324; Receivers; Specific Performance; Trial, ⟹4, 11; Trusts.

I. JURISDICTION, PRINCIPLES, AND MAXIMS.

(A) Nature, Grounds, Subjects, and Extent of Jurisdiction in General.

⟹13 (U.S.C.C.A.Mo.) Where hardship amounting to injustice would be inflicted on a party by holding him to his apparent bargain, it is within the jurisdiction of equity to relieve him. —Fay v. Hill, 389.

⟹39(1) (U.S.C.C.A.Mo.) A court of equity, having obtained jurisdiction of a suit wherein cancellation of contract of sale was sought, will retain the jurisdiction to dispose of all controversies between the parties arising out of the transaction.—Fay v. Hill, 389.

(C) Principles and Maxims of Equity.

⟹65(2) (U.S.C.C.A.Mich.) Where purchaser of land, having been admitted into possession, defaulted in payment and allowed vendor to forfeit contract, without informing him as to trouble with title, such purchaser is not entitled to equitable aid on account of improvements placed on premises, which by forfeiture became property of vendor.—Crocker v. Ingersoll Engineering & Constructing Co., 91.

IV. PLEADING.

(A) Original Bill.

⟹141(1) (U.S.C.C.A.Miss.) Sufficiency of bill is not to be determined by consideration of whether pleader will be able to establish his allegations.—Bolin v. Wilkes, 615.

(E) Demurrer, Exceptions, and Motions.

⟹220 (U.S.C.C.A.Mo.) Under equity rule 22 (198 Fed. xxiv, 115 C. C. A. xxiv), the fact that there is a remedy at law is no ground for demurrer to a bill, but proper procedure is to move to transfer it to the law side.—Fay v. Hill, 389.

VII. DISMISSAL BEFORE HEARING.

⟹362 (U.S.C.C.A.Mo.) Under equity rule 22 (198 Fed. xxiv, 115 C. C. A. xxiv) the fact that

Digitized by Google

there is a remedy at law is no ground for motion to dismiss a bill, but proper procedure is to move to transfer it to the law side.—Fay v. Hill, 389.

⚷363 (U.S.C.C.A.Cal.) Motion to dismiss bill of complaint admits truth of material allegations.—Edwards v. Bodkin, 488.

EQUITY RULES.

See Court Rules Cited.

EQUIVALENTS.

See Patents, ⚷241.

ERROR, WRIT OF.

See Appeal and Error.

ESTATES.

See Executors and Administrators; Landlord and Tenant; Trusts; Wills.

ESTOPPEL.

See Judgment, ⚷564–721; Mortgages, ⚷596, 597; Patents, ⚷168.

EVIDENCE.

See Criminal Law, ⚷369–441; Witnesses.

For evidence as to particular facts or issues or in particular actions or proceedings, see also the various specific topics.

For review of rulings relating to evidence, see Appeal and Error.

I. JUDICIAL NOTICE.

⚷20(2) (U.S.C.C.A.N.D.) That every bank keeps bills receivable registers and collection registers is so well known that courts may take judicial notice of the fact.—Stockyards Nat. Bank of St. Paul, Minn., v. First Nat. Bank of Towner, N. D., 395.

⚷37 (U.S.C.C.A.Canal Zone) Foreign laws are facts, and must, like other facts, be proven.—Panama Electric Ry. Co. v. Moyers, 79.

In action in the district court for the Canal Zone for damages from collision occurring in Panama, plaintiff's failure to introduce evidence of the law of Panama could not be excused because of familiarity of trial judge with Panama law.—Id.

II. PRESUMPTIONS.

⚷60 (U.S.C.C.A.Pa.) Where act of party may refer indifferently to one of two motives, law prefers to refer it to that which is honest rather than that which is dishonest.—Alexander v. Fidelity Trust Co., 61.

⚷75 (U.S.C.C.A.N.Y.) Failure of a ship to produce evidence in a suit for injury to a stevedore *held* to justify an inference that such evidence would be unfavorable to it.—The Colon, 418.

⚷81 (U.S.C.C.A.Canal Zone) While court of common-law country may presume that laws of foreign country which are of common-law origin are same as those of forum, there is no such presumption with respect to laws of country having their origin in civil, instead of common, law.—Panama Electric Ry. Co. v. Moyers, 79.

III. BURDEN OF PROOF.

⚷90 (U.S.C.C.A.N.Y.) Burden of proof in any proceeding lies on that party against whom judgment would be given if no evidence at all were produced on either side, and is determined by pleadings.—Cowen Co. v. Houck Mfg. Co., 293.

Where defendant abandoned answer served, and relied on entirely different defense orally stated, case must be treated as if defense relied on had been regularly pleaded, in determining which party had burden of proof.—Id.

⚷94 (U.S.C.C.A.N.Y.) Burden of proof, as fixed by examination of pleadings, does not change, although during progress of trial burden of going forward with evidence to rebut prima facie case may shift.—Cowen Co. v. Houck Mfg. Co., 293.

IV. RELEVANCY, MATERIALITY, AND COMPETENCY IN GENERAL.

(E) Competency.

⚷155(8) (U.S.C.C.A.Pa.) Where contractors sued corporation to use of plaintiff, to whom they had made partial assignment, and auxiliary ledger evidencing assignment was introduced in evidence, other books of corporation, showing transactions between contractors and corporation, were admissible.—Sheatz v. Markley, 323.

VII. ADMISSIONS.

(C) By Grantors, Former Owners, or Privies.

⚷234 (U.S.C.C.A.Pa.) In action against corporation by contractors, to use of one to whom they had made partial assignment, evidence of admissions made by contractors that the contract on which claim was based had not been performed, though occurring after alleged partial assignment, are admissible in evidence; acceptance of assignment having been denied, and time that admissions were made going only to their probative force.—Sheatz v. Markley, 323.

VIII. DECLARATIONS.

(A) Nature, Form, and Incidents in General.

⚷271(18) (U.S.C.C.A.Pa.) Ex parte statement by trustee in his own book that he had paid one of beneficiaries is not admissible in action by beneficiary to compel his executor to account.—Alexander v. Fidelity Trust Co., 61.

IX. HEARSAY.

⚷318(1) (U.S.C.C.A.Iowa) In an action for the reasonable value of labor and materials which plaintiff bestowed, at the request of defendant, upon certain metal patterns and accessories, a written statement of the number of hours of labor expended and materials furnished is self-serving, and should not be admitted in connection with the testimony of a witness as to the number of hours expended on the job, as shown from the time slips which were produced in court.—Hart-Parr Co. v. Barth Mfg. Co., 539.

Digitized by Google

X. DOCUMENTARY EVIDENCE.

(C) Private Writings and Publications.

⚷354(2) (U.S.C.C.A.N.D.) Exclusion of bills receivable register and collection register of pledgor bank, in action by pledgee to recover against purchaser from pledgor, was error.—Stockyards Nat. Bank of St. Paul, Minn., v. First Nat. Bank of Towner, N. D., 395.

(D) Production, Authentication, and Effect.

⚷383(3) (U.S.C.C.A.Ohio) In view of imperfections of human memory, statement or certificate of District Judge with respect to appointment of receiver, which it was asserted was secured through imposition on court, does not, where made in summary proceeding, in which no issues to determine liability of petitioning creditors were framed, import verity, as would record of judicial proceedings required to be certified.—In re Veler, 543.

XII. OPINION EVIDENCE.

(B) Subjects of Expert Testimony.

⚷533 (U.S.C.C.A.Ky.) In proceeding by telegraph company to condemn easement over railroad right of way, where question of damages depended on diminution in value of remainder of right of way for railroad purposes, railroad men, familiar with cost and effect of every operation which might be involved, are competent to testify to damage, as are telegraph men, familiar with construction and maintenance problems, so far as their knowledge extends.—Louisville & N. R. Co. v. Western Union Telegraph Co., 359.

XIV. WEIGHT AND SUFFICIENCY.

⚷584(3) (U.S.C.C.A.N.Y.) Certainty beyond a reasonable doubt is reached by quality of evidence and testimony of one witness may suffice, if the surrounding circumstances are confirmatory.—Mayer v. A. & H. G. Mutschler, 29.

EXAMINATION.

See Witnesses, ⚷269.

EXCEPTIONS.

See Appeal and Error, ⚷257, 269; Criminal Law, ⚷1090; Exceptions, Bill of.

EXCEPTIONS, BILL OF.

See Criminal Law, ⚷1090.

II. SETTLEMENT, SIGNING, AND FILING.

⚷41(2) (U.S.C.C.A.Ind.) Where defendant's counsel, who prepared bill of exceptions, took it to court at chambers after plaintiff's counsel had made objection to insertion of typewritten copy of insurance policy involved, and court in presence of opposing counsel observed necessity of inserting photographic copy, bill, in view of informality of such proceedings, must be deemed to have been presented at that time.—In re Federal Life Ins. Co., 26.

Defendant's counsel, having presented bill of exceptions during term, *held*, under circumstances, not to have been guilty of neglect, though bill of exceptions, as changed, was not presented during term, because of intervening summer recess and inability of defendant's counsel to serve same on counsel for plaintiff.—Id.

⚷43(1) (U.S.C.C.A.Va.) A bill of exceptions may be allowed by consent after the time fixed by order or rule of the District Court and after the expiration of the term at which the case was decided.—E. I. Du Pont de Nemours & Co. v. Smith, 377.

That a bill of exceptions was presented and allowed after the time allowed by order of the court, and after expiration of the term, *held* not ground for dismissal, where conduct of counsel for defendant in error amounted to consent.—Id.

⚷53(3) (U.S.C.C.A.Ind.) Where bill of exceptions was presented during term, and no unjustifiable delay on part of moving party appeared, and only objection to settlement was that bill was not timely presented, moving party is entitled to writ of mandamus directing signing of bill.—In re Federal Life Ins. Co., 26.

EXCESSIVE DAMAGES.

See Death, ⚷99.

EXCISE.

See Internal Revenue.

EXECUTION.

See Courts, ⚷505; Deeds, ⚷49.

EXECUTORS AND ADMINISTRATORS.

See Courts, ⚷505; Death, ⚷31; Trusts, ⚷305; Wills.

III. ASSETS, APPRAISAL, AND INVENTORY.

⚷47 (U.S.C.C.A.Pa.) Shares of deceased beneficiaries under trust are distributable to their administrators, and in suit by surviving beneficiary question whether shares of such deceased beneficiaries descended to survivors need not be determined.—Alexander v. Fidelity Trust Co., 61.

EXECUTORY CONTRACTS.

See Sales, ⚷61.

EXEMPTIONS.

See Bankruptcy, ⚷400; Master and Servant, ⚷362; Process, ⚷119.

EXPENSES.

See Bankruptcy, ⚷474.

EXPERT TESTIMONY.

See Evidence, ⚷533.

EXPRESS COMPANIES.

See Carriers, ⚷4; Master and Servant, ⚷100.

Digitized by Google

EXTRADITION.

I. INTERNATIONAL.

⚷19 (U.S.C.C.A.Canal Zone) In view of Rev. St. § 5275 (Comp. St. 1916, § 10121), where defendant was extradited from Panama into Canal Zone on criminal charge, service on him of order commanding him to appear and show cause why he should not be attached for contempt, made while he was in jail held as an extradited prisoner, furnishes no basis for an adjudication in contempt.—Smith v. Government of Canal Zone, 281.

FACTORS.

See Brokers.

FALSE SWEARING.

See Perjury.

FEDERAL COURTS.

See Courts.

FEDERAL EMPLOYERS' LIABILITY ACT.

See Courts, ⚷37; Master and Servant, ⚷100.

FELLOW SERVANTS.

See Master and Servant, ⚷285.

FILING.

See Bankruptcy, ⚷31.

FINDINGS.

See Admiralty, ⚷118; Appeal and Error, ⚷846, 859, 1008; Ejectment, ⚷93; Trial, ⚷393.

FIRES.

See Sales, ⚷201.

FORECLOSURE.

See Bankruptcy, ⚷213; Mortgages, ⚷427-567.

FOREIGN MONEY.

See Payment, ⚷12.

FORFEITURES.

See Appeal and Error, ⚷671, 907; Indians, ⚷35; Jury, ⚷19; Landlord and Tenant, ⚷103; Public Lands, ⚷209; Statutes, ⚷241.

FORGERY.

See Carriers, ⚷83.

FORMER ADJUDICATION.

See Judgment, ⚷564-721.

FRANCHISES.

See Street Railroads, ⚷55.

FRAUD.

See Cancellation of Instruments, ⚷32; Frauds, Statute of; Internal Revenue, ⚷25; Mortgages, ⚷608½; Patents, ⚷200; Post Office, ⚷35, 49; Receivers, ⚷58; Sales, ⚷45, 124, 348.

I. DECEPTION CONSTITUTING FRAUD, AND LIABILITY THEREFOR.

⚷11(1) (U.S.C.C.A.N.Y.) Where buyer of vacuum cleaners and materials and machinery for their manufacture was allowed full opportunity to inspect cleaners and test them, misrepresentations concerning their qualities and powers should be deemed mere puffing talk, which would not give rise to action for deceit.—Vulcan Metals Co. v. Simmons Mfg. Co., 7.

Where seller of large number of vacuum cleaners already manufactured and materials and machinery for their manufacture represented that they had not been put on the market, such representation was one of fact, falsity of which would give rise to action for deceit.—Id.

⚷11(2) (U.S.C.C.A.Mich.) Where defendant, when he interested complainant in the acquisition of a leasehold, stated that it could be obtained for $60,000, but when the negotiations were actually entered into the owner demanded $65,000, defendant's statements concerning the $60,000 were a mere expression of opinion only.—Reid v. Shaffer, 479.

⚷20 (U.S.C.C.A.N.Y.) To maintain an action for deceit, the fraud alleged must have been perpetrated by defendants and must have deceived plaintiff.—Missouri Phonograph Co. v. Tomlinson, 568.

II. ACTIONS.

(A) Rights of Action and Defenses.

⚷36 (U.S.C.C.A.N.Y.) Seller's retraction of false statement made in negotiations prior to time parties entered into contract is good defense in action for deceit by buyer, and this is so where seller delivered to buyer written retraction under circumstances warranting belief that buyer would inform himself of its contents.—Vulcan Metals Co. v. Simmons Mfg. Co., 7.

(C) Evidence.

⚷50 (U.S.C.C.A.N.Y.) Where buyer asserted that seller made false statement, and seller defended on ground that it had retracted same, burden of proving retraction is on seller.—Vulcan Metals Co. v. Simmons Mfg. Co., 7.

(E) Trial, Judgment, and Review.

⚷64(1) (U.S.C.C.A.N.Y.) Where buyer asserted that seller was guilty of false representations, amounting to deceit, question whether seller's representative made representations asserted *held*, under evidence, for jury.—Vulcan Metals Co. v. Simmons Mfg. Co., 7.

Statement in written contract of sale showing that vacuum cleaners sold had been placed on market cannot as matter of law be treated as retraction of seller's misrepresenta-

Digitized by Google

tions that such appliances had not been placed on market; but question whether statement was brought to notice of buyer's representative is for jury.—Id.

FRAUDS, STATUTE OF.

VI. REAL PROPERTY AND ESTATES AND INTERESTS THEREIN.

⚷63(5) (U.S.C.C.A.Miss.) Code Miss. 1906, § 4780, declaring that declarations or creations of trusts shall be made and manifested by writing, but that, where any trust shall arise or result by implication of law out of a conveyance of land, such trust shall not be affected by the statute, by its own terms excepts a mortgage created by deed absolute on its face.—Bolin v. Wilkes, 615.

IX. OPERATION AND EFFECT OF STATUTE.

⚷119(1) (U.S.C.C.A.Ark.) Where purchasers of Arkansas lands contracted to resell same, relying on vendors' oral agreement to modify original contract, which was in writing, and vendors declined to carry out modification, whereupon purchasers made different agreement as to lands resold, latter agreement cannot be canceled and original contract enforced on theory of duress of property, for that would result in indirect evasion of statute of frauds. —Odell v. Barton, 530.

FRAUDULENT CONVEYANCES.

See Bankruptcy, ⚷57, 407.

FREIGHT.

See Maritime Liens, ⚷9.

FUGITIVE FROM JUSTICE.

See Extradition.

FUTURES.

See Gaming, ⚷2.

GAMING.

I. GAMBLING CONTRACTS AND TRANSACTIONS.

(A) Nature and Validity.

⚷2 (U.S.C.C.A.Ala.) Code Ala. 1907, § 3353, declaring that money paid on futures may be recovered, has no application to transactions occurring without borders of state, and furnishes no right of recovery, even though action on transaction was brought in federal District Court for Alabama.—Warten v. Brown, 108.

GAS.

See Mines and Minerals, ⚷58.

GOOD FAITH.

See Joint Adventures, ⚷4.

GRAND JURY.

See Criminal Law, ⚷419, 420; Indictment and Information; Witnesses, ⚷269.

GUARANTY.

See Banks and Banking, ⚷109, 117.

GUARDIAN AND WARD.

III. CUSTODY AND CARE OF WARD'S PERSON AND ESTATE.

⚷69 (U.S.C.C.A.Okl.) Rev. Laws Okl. 1910, §§ 3339–3341, forbidding guardian's discharge until a year after his ward's majority, does not extend guardian's authority over ward's estate and its accompanying disqualification, but is intended to provide period for orderly review of guardian's acts, so contract between guardian and ward within year mentioned is not void.—Williams v. Canary, 352.

V. ACTIONS.

⚷131 (U.S.C.C.A.Okl.) Where guardian, shortly after ward reached his majority, or while any of guardianship duties were yet to be performed, contracted with ward, guardian has burden of showing that transaction was fair and reasonable, and that no advantage was taken.—Williams v. Canary, 352.

HAND BRAKE ACT.

See Master and Servant, ⚷142.

HARMLESS ERROR.

See Appeal and Error, ⚷1046; Criminal Law, ⚷1169; Eminent Domain, ⚷262.

HARRISON ACT.

See Criminal Law, ⚷369; Poisons, ⚷4.

HEARSAY EVIDENCE.

See Criminal Law, ⚷419, 420; Evidence, ⚷318.

HIGHWAYS.

See Railroads, ⚷301–350.

HOMESTEAD.

See Public Lands, ⚷102, 103.

HOURS OF LABOR.

See Master and Servant, ⚷13.

IMPAIRING OBLIGATION OF CONTRACT.

See Constitutional Law, ⚷163.

IMPLIED CONTRACTS.

See Work and Labor.

IMPROVEMENTS.

See Action, ⚷53; Equity, ⚷65; Mechanics' Liens; Patents, ⚷16, 37, 42.

INCOME TAX.

See Internal Revenue, ⚷7, 38.

Digitized by Google

INDIANS.

See Criminal Law, ⚷37, 822; Eminent Domain, ⚷20; Jury, ⚷19.

⚷35 (U.S.C.C.A.Minn.) Kelliher, in county of Beltrami, state of Minnesota, which is within exterior boundaries of territory ceded to United States by Chippewa Treaty of February 22, 1855, is Indian territory.—Harris v. United States, 101.

⚷35 (U.S.C.C.A.Okl.) In view of Act March 2, 1917, Rev. St. § 2140 (Comp. St. 1916, § 4141), does not warrant forfeiture of lien of chattel mortgagee on automobile used by mortgagor in possession to convey intoxicants into Indian country.—Shawnee Nat. Bank v. United States, 509.

Rev. St. § 2140 (Comp. St. 1916, § 4141), providing for forfeiture of boats, teams, wagons, and sleds used in conveying intoxicants into Indian country, does not warrant forfeiture of automobile, particularly as Act March 2, 1917, extended the forfeiture to automobiles. —Id.

⚷38(1) (U.S.C.C.A.Minn.) In prosecution for introducing or causing to be introduced, into Indian territory intoxicating liquors in violation of Rev. St. § 2139, as amended by Act Feb. 27, 1877, and by Act July 23, 1892, where offense was committed after passage of Act May 18, 1916, question of defendant's guilt *held* under evidence properly submitted to jury. —Harris v. United States, 101.

⚷38(4) (U.S.C.C.A.Okl.) In view of Rev. St. § 1025 (Comp. St. 1916, § 1691), an indictment *held* sufficient to charge offense of introducing, from without into that part of state of Oklahoma which was Indian Territory, intoxicating liquor.—Dosset v. United States, 20.

INDICTMENT AND INFORMATION.

See Conspiracy, ⚷43; Criminal Law, ⚷419, 420, 1043; Indians, ⚷38; Perjury, ⚷25, 26; Witnesses, ⚷269.

IX. ISSUES, PROOF, AND VARIANCE.

⚷166 (U.S.C.C.A.Mass.) Where indictment described property generally, averring that a more particular description was to the grand jury unknown, the prosecution must show that grand jurors were in fact ignorant of a more particular description as to a substantial portion of the property, or there must be acquittal because of the variance.—Feener v. United States, 399.

INDORSEMENT.

See Bills and Notes, ⚷188; Carriers, ⚷56, 83.

INFANTS.

See Guardian and Ward; Parent and Child.

INFRINGEMENT.

See Patents, ⚷16, 238-324; Trade-Marks and Trade-Names, ⚷59.

INJUNCTION.

See Costs, ⚷232; Judgment, ⚷564; Patents, ⚷324.

II. SUBJECTS OF PROTECTION AND RELIEF.

(B) Property, Conveyances, and Incumbrances.

⚷56 (U.S.C.C.A.Pa.) Complainant *held* entitled to an injunction restraining defendant, a competing manufacturer, from using a secret process of complainant, disclosed to him by a former employé of complainant in violation of his contract of employment.—Nulomoline Co. v. Stromeyer, 523.

(C) Contracts.

⚷62(1) (U.S.C.C.A.Mich.) Injunction is an appropriate remedy to enforce a restrictive covenant imposed on lands by common grantor for benefit of his several grantees.—Crocker v. Ingersoll Engineering & Constructing Co., 91.

VIII. LIABILITIES ON BONDS OR UNDERTAKINGS.

⚷235 (U.S.C.C.A.La.) Where, pending appeal from order enjoining mortgage foreclosure sale under statutory proceedings in state court, settlement of question involved was effected, appellants cannot, appeal being dismissed, assert any rights for damages or costs on injunction bond.—Clark v. Fairbanks, 405.

INSOLVENCY.

See Bankruptcy; Banks and Banking, ⚷166; Corporations, ⚷556, 557; Limitation of Actions, ⚷163.

INSTRUCTIONS.

To jury, see Criminal Law, ⚷811-829; Trial, ⚷217-296.

INTENT.

See Contracts, ⚷147; Criminal Law, ⚷371; Partnership, ⚷5; Sales, ⚷61.

INTEREST.

See Internal Revenue, ⚷38; United States, ⚷67; Vendor and Purchaser, ⚷351.

INTERNAL REVENUE.

⚷2 (U.S.C.C.A.Colo.) The only limitation on the power of Congress in the imposition of excise taxes, such as those imposed on corporations, is that they be uniform throughout the United States, and by that is meant a geographical uniformity.—Camp Bird v. Howbert, 87.

Rev. St. § 3225 (Comp. St. 1916, § 5948), relating to internal revenue, and forbidding recovery of amounts paid on second assessment, where return was false or fraudulent, is not invalid in its applicability to Corporation Tax Act, for it does not destroy uniformity of taxation, applying to all portions of the country alike.—Id.

⚷4 (U.S.C.C.A.Colo.) The amendment to Rev. St. § 3225 (Comp. St. 1916, § 5948), is not

Digitized by Google

retroactive, and does not authorize recovery of corporation taxes previously collected from mining company on second assessment, where the first return was false.—Camp Bird v. Howbert, 87.

⟹7 (U.S.C.C.A.Colo.) A dividend received by a corporation on stock of another corporation is subject to the tax imposed by Income Tax Act Oct. 3, 1913, § 2, G (a), for the calendar year in which it was declared and paid, though half the profits accrued prior to passage of act.—Skinner v. Union Pac. Coal Co., 204.

⟹7 (U.S.C.C.A.Hawaii) The partnership of Hawaii corporations, organized under Sess. Laws Hawaii 1903, Act 51, § 1, *held* a partnership, and not a joint-stock association, within Income Tax Law Oct. 3, 1913.—Haiku Sugar Co. v. Johnstone, 155.

⟹7 (U.S.C.C.A.N.Y.) Under Income Tax Act Oct. 3, 1913, § 2, G (a), dividends paid by lessee direct to stockholders of railroad corporation, which leased all its property, must be deemed corporate income, and taxable as such.—Rensselaer & S. R. Co. v. Irwin, 636.

Corporation is liable under Income Tax Act Oct. 3, 1913, § 2, G (a), imposing taxes on corporate income arising or accruing from all sources, though it was not engaged in business and derived all its income as rent from its property.—Id.

⟹25 (U.S.C.C.A.Tenn.) Under Act Aug. 5, 1909, imposing excise tax of 1 per cent. on net income of corporations, and providing for new assessment in case of false and fraudulent reports, and for recovery of additional taxes, the word "false" means untrue or incorrect, and does not necessarily mean "intentionally" or "fraudulently" false.—United States v. Nashville, C. & St. L. Ry., 588.

⟹28 (U.S.C.C.A.Tenn.) It is the general rule, applicable, not only to customs duties, but to internal revenue taxes, that a common-law action of debt lies in favor of the government whenever, by accident, mistake, or fraud, the government has not received full payment of duties and excise taxes.—United States v. Nashville, C. & St. L. Ry., 588.

In action to recover revenue taxes, such as excise tax on corporations, rule which denies use of any but statutory remedy has no application to general government, unless clearly and specifically so declared.—Id.

Excise taxes under Act Aug. 5, 1909, are specific taxes, differing from state ad valorem taxes, as to which no tax is imposed until the officers act, and no suit for any tax will lie until after such action.—Id.

In view of Rev. St. § 3213 (Comp. St. 1916, § 5937), *held* that, under Act Aug. 5, 1909, § 38, subds. 5, 8, United States may maintain action against corporation for excise taxes based on income omitted, though Commissioner of Internal Revenue made no reassessment, etc., within time prescribed.—Id.

Declaration in action by United States against railroad corporation *held* to sufficiently aver that deductions from gross corporate income were not authorized under Act Aug. 5, 1909, § 38.—Id.

⟹38 (U.S.C.C.A.Colo.) In view of fact that it was enacted as part of legislation imposing a general system of internal revenue to meet financial burdens of the Civil War, Rev. St. § 3225 (Comp. St. 1916, § 5948), in its application to taxes collected under Corporation Tax Act, does not authorize recovery of sums paid on a second assessment, where return was false, but not fraudulent.—Camp Bird v. Howbert, 87.

As Corporation Tax Act imposes an excise tax, and declares that all laws relating to collection, remission, and refund of internal revenue taxes so far as applicable shall apply, Rev. St. § 3225 (Comp. St. 1916, § 5948), part of law relating to refund of internal revenue taxes, is applicable.—Id.

⟹38 (U.S.C.C.A.Hawaii) Where a collector of internal revenue, acting under Income Tax Law Oct. 3, 1913, illegally collected taxes from a partnership composed of corporations, the members of the firm are entitled to recover the exaction, with interest and costs.—Haiku Sugar Co. v. Johnstone, 155.

INTERNATIONAL LAW.

See War.

INTERNED ALIENS.

See Conspiracy, ⟹43; Constitutional Law, ⟹252; War, ⟹4.

INTOXICATING LIQUORS.

See Appeal and Error, ⟹671, 907; Bankruptcy, ⟹314; Criminal Law, ⟹37, 59, 82; Indians, ⟹35, 38; Jury, ⟹19.

VI. OFFENSES.

⟹147 (U.S.C.C.A.Neb.) Where brewing company located in Illinois gave to bankrupt exclusive right to sell its beer at wholesale, same to be delivered f. o. b. at Omaha, Neb., sales must be deemed to have occurred in Illinois, where brewing company was licensed.—Thompson, Belden & Co. v. Leisy Brewing Co., 420.

INVENTION.

See Patents.

IRRIGATION.

See Public Lands, ⟹102.

JOINT ADVENTURES.

⟹1 (U.S.C.C.A.Mich.) Transaction whereby parties were to acquire a leasehold *held* a joint adventure.—Reid v. Shaffer, 479.

⟹4(1) (U.S.C.C.A.Mich.) Where parties engage in a common enterprise by way of joint adventure, each has the right to demand and expect from his associates good faith in all that relates to their common interests.—Reid v. Shaffer, 479.

Parties to transaction relating to the acquisition of a leasehold *held* joint adventurers, and defendant's concealment of an unexpected profit made at the close of the negotiations will not work a forfeiture of his interest in enterprise, although he is bound to account for the profit concealed.—Id.

⟹5(1) (U.S.C.C.A.Mich.) While assumpsit is the proper remedy for the recovery of a liquidated sum withheld by one joint adventurer

Digitized by Google

from his associates in the transaction, recourse may be had to equity, where the amount is unliquidated and there is also a prayer for cancellation of the written contract between the parties relating to the transaction.—Reid v. Shaffer, 479.

JOINT AND SEVERAL CONTRACTS.

See Contracts, ⚷182.

JOINT LIABILITIES.

See Corporations, ⚷246.

JOINT-STOCK COMPANIES.

See Internal Revenue, ⚷7; Partnership, ⚷224.

⚷8 (U.S.C.C.A.Hawaii) The changeability of membership or transferability of shares is often used as a determining criterion between ordinary partnerships and joint-stock companies.—Haiku Sugar Co. v. Johnstone, 155.

⚷10 (U.S.C.C.A.Hawaii) In a joint-stock company the members have no right to decide what new members shall be admitted.—Haiku Sugar Co. v. Johnstone, 155.

⚷18 (U.S.C.C.A.Hawaii) In a joint-stock company the business is generally managed by directors or other designated officers of association, and a shareholder as such is without power to contract for company.—Haiku Sugar Co. v. Johnstone, 155.

⚷23 (U.S.C.C.A.Hawaii) A joint-stock company usually consists of a large number of persons, between whom there is no special relation of confidence; hence retirement or death of a member works no dissolution.—Haiku Sugar Co. v. Johnstone, 155.

JUDGMENT.

For judgments in particular actions or proceedings, see also the various specific topics.
For review of judgments, see Appeal and Error.

XIII. MERGER AND BAR OF CAUSES OF ACTION AND DEFENSES.

(A) Judgments Operative as Bar.

⚷564(2) (U.S.C.C.A.Ill.) A temporary restraining order, made on application for a temporary injunction in any suit pending, is not a final determination, which renders the issues involved res judicata.—Santowsky v. McKey, 111.

(B) Causes of Action and Defenses Merged, Barred, or Concluded.

⚷590(1) (U.S.C.C.A.Pa.) Decision in suit to compel accounting by defendant executor for other trust property in possession of testator as trustee, *held* not to amount to rule of decision precluding direction of accounting in suit based on second trust.—Alexander v. Fidelity Trust Co., 61.

XIV. CONCLUSIVENESS OF ADJUDICATION.

(A) Judgments Conclusive in General.

⚷649 (U.S.C.C.A.Porto Rico) Orders entered in proceedings for settlement of estate of lessee of Porto Rico land, which by agreement treated lessors as mortgagees, not having been acted on within time limited, cannot be deemed to have given heirs of lessee title which they could convey subject only to mortgage rights of lessors.—Franceschi v. Jones, 3.

(C) Matters Concluded.

⚷721 (U.S.C.C.A.Va.) Judgment recovered in state courts by claimant against bankrupt, on theory that he was liable as indorser of notes executed by partnership subsequently adjudged bankrupt, is not, where claimant, at time of judgment, did not know bankrupt was member of firm, conclusive adjudication as to bankrupt's liability as member of partnership.—Horner v. Hamner, 186.

JUDICIAL NOTICE.

See Evidence, ⚷20, 37.

JUDICIAL SALES.

See Bankruptcy, ⚷262; Mortgages, ⚷534.

JURISDICTION.

See Appearance; Bankruptcy, ⚷293; Courts; Equity, ⚷13, 39.

JURY.

See Bankruptcy, ⚷93; Criminal Law, ⚷631; Trial, ⚷146.

II. RIGHT TO TRIAL BY JURY.

⚷19(11) (U.S.C.C.A.Ky.) As Act 1898, c. 49 (Ky. St. § 4679c), do not, in view of sections 4 and 6, contemplate jury trial on questions of necessity, a jury trial on that issue is not warranted where proceeding to condemn easement for telegraph lines over railroad right of way is brought in the federal court, because it is for some purposes deemed an action at law within Rev. St. U. S. § 566 (Comp. St. 1916, § 1583).—Louisville & N. R. Co. v. Western Union Telegraph Co., 359.

⚷19(15) (U.S.C.C.A.Okl.) A proceeding to forfeit an automobile, under Rev. St. 2140 (Comp. St. 1916, § 4141), seized on land, on ground that it was used as means for introduction of intoxicating liquor into Indian country, is one at law, and parties are entitled to usual rights and remedies incident to such action, including right to trial by jury.—Shawnee Nat. Bank v. United States, 509.

⚷25(2) (U.S.C.C.A.Mo.) Where defendant was adjudged guilty of contempt under Judicial Code, § 268, for attempt to influence a juror as to his verdict, *held* that, record showing no demand for a jury trial, defendant could not complain that he had been denied same on theory that, as his act was also offense under Penal Code, § 135, and state laws, he was entitled to a trial by jury under Act Cong. Oct. 15, 1914, c. 323, §§ 21, 22, because section 24 was invalid as class legislation.—Couts v. United States, 521.

⚷31(4) (U.S.C.C.A.Ohio) Complaint or petition by trustee, addressed to bankruptcy court in exercise of its equity powers, praying accounting for damages resulting from appoint-

Digitized by Google

ment of receiver. which was secured through imposition on court, is not violative of right to jury trial.—In re Veler, 543.

LACHES.

See Corporations, ⟹209; Trusts, ⟹305.

LANDLORD AND TENANT.

See Carriers, ⟹117; Internal Revenue, ⟹7; Joint Adventures, ⟹1, 4; Judgment, ⟹649; Mines and Minerals, ⟹58; Stipulations, ⟹14.

IV. TERMS FOR YEARS.

(D) Termination.

⟹103(1) (U.S.C.C.A.Porto Rico) Breach of condition or covenant with right of re-entry does not ipso facto work forfeiture of lease, but merely subjects grantee or lessee to liability to have forfeiture declared at lessor's option.—Porto Rico Ry., Light & Power Co. v. United States, 76.

VII. PREMISES, AND ENJOYMENT AND USE THEREOF.

(E) Injuries from Dangerous or Defective Condition.

⟹167(2) (U.S.C.C.A.Tex.) Where street railway company conducted amusement park for purpose of increasing its traffic, and as part of park constructed a pool, it is liable for death of one drowned as result of structural defects in pool, even though it leased pool to one who for small sum operated same.—Southwestern Gas & Electric Co. v. Thomas, 333.

LANDS.

See Public Lands.

LEASE.

See Landlord and Tenant; Mines and Minerals, ⟹58; Public Lands, ⟹209.

LETTERS.

See Conspiracy, ⟹43; Criminal Law, ⟹402; Limitation of Actions, ⟹148.

LIBEL.

See Admiralty, ⟹66.

LIENS.

See Bankruptcy, ⟹192, 262; Maritime Liens; Mechanics' Liens.

LIMITATION OF ACTIONS.

See Adverse Possession; Courts, ⟹366; Deeds, ⟹176; Receivers, ⟹170; United States, ⟹67.

II. COMPUTATION OF PERIOD OF LIMITATION.

(B) Performance of Condition, Demand, and Notice.

⟹66(4) (U.S.C.C.A.Ariz.) Balances due upon unpaid capital stock of a corporation do not become payable, so as to start the running of limitation, until there has been a call or assessment.—In re Phœnix Hardware Co., 384.

III. ACKNOWLEDGMENT, NEW PROMISE, AND PART PAYMENT.

⟹148(4) (U.S.C.C.A.N.J.) Letter of a corporation *held* to contain a sufficient acknowledgment of an antecedent debt to raise the bar of the statute of limitations of New Jersey (3 Comp. St. N. J. 1910, p. 3167, § 10).—Stokes v. Williams, 166.

⟹158 (U.S.C.C.A.N.Y.) Where there was only one debt due from insolvent, his direction to put to his credit note delivered to creditor must be construed as payment on debt, and to have revived same, although barred by limitations.—In re Salmon, 308.

⟹163(1) (U.S.C.C.A.N.Y.) Payment made by one who knows he is insolvent, which he directs to be applied to his credit, made to one who has no knowledge of insolvency of payor, takes debt out of statute of limitations, so that on bankruptcy of payor it may come in and participate in assets.—In re Salmon, 308.

LIQUOR SELLING.

See Intoxicating Liquors.

LIS PENDENS.

See Abatement and Revival, ⟹14.

LITERARY PROPERTY.

See Copyrights.

LIVE STOCK.

See Carriers, ⟹37.

LOGS AND LOGGING.

See Trespass, ⟹20.

MAIL.

See Post Office.

MANDAMUS.

See Exceptions, Bill of, ⟹53.

I. NATURE AND GROUNDS IN GENERAL.

⟹4(1) (U.S.C.C.A.W.Va.) A writ of mandamus will not be granted to require a District Judge to correct alleged errors occurring on the trial of a cause, where they can be brought up for review by appeal.—In re Duncan, 207.

MARITIME LIENS.

See Towage, ⟹9.

I. NATURE, GROUNDS, AND SUBJECT-MATTER IN GENERAL.

(A) Under Maritime Law.

⟹9 (U.S.C.C.A.Va.) A claim of a charterer for dead freight, which is in the nature of one for loss of profits, is not enforceable in a suit

Digitized by Google

in rem as a lien on the vessel.—Clinton v Smith & Terry, 171.

III. ENFORCEMENT.

(A) In Admiralty.

⚷64 (U.S.C.C.A.La.) A libel *held* not to allege facts which gave libelant a maritime lien on a dredge for the sinking of a barge used in connection with the dredge.—The Dixie, 106.

MASTER AND SERVANT.

See Contracts, ⚷108; Courts, ⚷37; Evidence, ⚷75, 318; Seamen; Trial, ⚷238.

I. THE RELATION.

(B) Statutory Regulation.

⚷13 (U.S.C.C.A.Colo.) Where telegraph operator employed by defendant, who performed duties for and was subject to orders of second railroad company, which through accounting between two companies made contributions to his salary, was required by second company to remain on duty longer than allowed by Hours of Service act, defendant is liable for penalty prescribed.—United States v. Denver & R. G. R. Co., 422.

⚷13 (U.S.C.C.A.Mich.) Under Hours of Service Act, § 2, *held* that, where operator was kept on duty in station office more than 12 hours during day, and operator was kept on duty in box car office in yards some distance away for more than 12 hours at night, two offices must, in view of their proximity, be considered as one, and so violation of act is shown.—Grand Rapids & I. Ry. Co. v. United States, 556.

⚷16½. Owing to the great increase of matter heretofore classified to this section, we have made a new subdivision, consisting of ⚷ number sections 346–420, at the end of this topic, where the matter in this and future index digests will be found.

II. SERVICES AND COMPENSATION.

(A) Performance of Services.

⚷62 (U.S.C.C.A.Mich.) A patent for a sheet metal safe or cabinet issued to defendant *held* one for an improvement in safe-cabinet art and within terms of contract requiring defendant to treat as property of his employer, all improvements in safe-cabinet and his inventions embodying any principles of safe cabinet construction.—Wege v. Safe-Cabinet Co., 606.

Where contract between defendant and his employer requiring him to act as superintendent of employer's manufacturing business, provided that any patents for improvements and inventions in article manufactured should become property of employer, defendant is impliedly bound to assign such patents.—Id.

III. MASTER'S LIABILITY FOR INJURIES TO SERVANT.

(A) Nature and Extent in General.

⚷87½. Owing to the great increase of matter heretofore classified to this section, we have made a new subdivision, consisting of ⚷ number sections 346–420, at the end of this topic, where the matter in this and future index digests will be found.

⚷100(1) (U. S. C. C. A. Miss.) An express company is a carrier by railroad, within section 5 of federal Employers' Liability Act; hence an agreement between company and its messenger that there could be no recovery by messenger for injuries sustained while traveling on any railroad is invalid.—Taylor v. Wells Fargo & Co., 161.

(C) Methods of Work, Rules, and Orders.

⚷137(3) (U.S.C.C.A.Mo.) Driver of railway motorcar *held* guilty of no breach of duty towards fellow employé in failing to stop, though seeing approaching automobile, unless he perceived that the automobile driver would not stop and thereafter failed to exercise reasonable care.—Kansas City, C. & S. Ry. Co. v. Shoemaker, 416.

⚷142 (U.S.C.C.A.Mich.) That it was necessary for brakemen to go on top of car to set retainers, which were parts of air brake system, does not, in view of Safety Appliance Act, justify rule of railroad company requiring use of hand brakes in descent of a long grade.—Grand Rapids & I. Ry. Co. v. United States, 560.

As Hand Brake Act, § 5, declares that nothing therein shall be held or construed to relieve any common carrier from any provisions of original Safety Appliance Act, as amended by Act April 1, 1896, c. 87, and Act March 2, 1903, c. 976, requirement that freight cars should be equipped with hand brakes does not justify a railroad company in directing their brakemen to use the same on descent of a long grade.—Id.

(H) Actions.

⚷250¾. Owing to the great increase of matter heretofore classified to this section, we have made a new subdivision, consisting of ⚷ number sections 346–420, at the end of this topic, where the matter in this and future index digests will be found.

⚷265(3) (U.S.C.C.A.Mo.) Railway employé, injured while riding on motorcar, *held* to have burden of proving allegation that negligence of the driver caused or directly contributed to the collision with an automobile.—Kansas City, C. & S. Ry. Co. v. Shoemaker, 416.

⚷265(12) (U.S.C.C.A.Mo.) Railway employé, riding on motorcar which collided with automobile, *held* to have burden of proving allegation as to negligence of driver of motorcar.—Kansas City, C. & S. Ry. Co. v. Shoemaker, 416.

⚷278(18) (U.S.C.C.A.Va.) A verdict finding a railroad company negligent and liable for the death of a switchman struck by a train in the yard *held* not supported by the evidence under the instructions of the court.—Atlantic Coast Line R. Co. v. Selden, 174.

⚷285(1) (U.S.C.C.A.Mo.) In absence of substantial evidence that driver of railway motorcar perceived that automobile driver would not stop, and that failure thereafter to exercise reasonable care directly contributed to fellow employé's injury, direction of verdict *held* improperly denied.—Kansas City, C. & S. Ry. Co. v. Shoemaker, 416.

⚷285(7) (U. S. C. C. A. N. Y.) Where railroad employé was injured while bending over, inserting stuffing and grease in journal boxes of cars, and there was testimony that at time of

Digitized by Google

injury cars were sent down adjoining track with doors hanging or sticking out, question whether he was struck by such an obstruction was properly submitted to the jury.—New York Cent. R. Co. v. Gapinski, 354.

⚷287(4) (U.S.C.C.A.Mo.) In absence of substantial evidence that driver of railway motorcar perceived that automobile driver would not stop, and that failure thereafter to exercise reasonable care directly contributed to fellow employé's injury, direction of verdict *held* improperly denied.—Kansas City, C. & S. Ry. Co. v. Shoemaker, 416.

⚷289(21) (U.S.C.C.A.W.Va.) An employé, injured by the falling of telephone pole decayed beneath surface of the ground, *held* not chargeable with contributory negligence as matter of law.—Western Union Telegraph Co. v. Hickman, 17.

VI. WORKMEN'S COMPENSATION ACTS.

(A) Nature and Grounds of Master's Liability.

⚷362 (U.S.C.C.A.W.Va.) Under Workmen's Compensation Act of West Virginia, which exempts from its operation persons in "casual employment," exemption depends, not on nature of work performed, but on nature of contract of employment.—Western Union Telegraph Co. v. Hickman, 17.

MECHANICS' LIENS.

II. RIGHT TO LIEN.

(A) Nature of Improvement.

⚷32 (U. S. C. C. A. Tex.) Under Const. Tex. art. 16, § 37, seller of ice and refrigerating machinery, which was complete in itself and could be disconnected without injury from purchaser's plant as it theretofore existed by unbolting four connections, is entitled to lien thereon.—Reeves v. York Engineering & Supply Co., 439.

MERGER.

See Judgment, ⚷564–721.

MEXICAN MONEY.

See Payment, ⚷12.

MINES AND MINERALS.

I. PUBLIC MINERAL LANDS.

(B) Location and Acquisition of Claims.

⚷38(23) (U.S.C.C.A.Nev.) In actions begun in state court pursuant to Rev. St. §§ 2325, 2326 (Comp. St. 1916, §§ 4622, 4623), to determine contests over Nevada mining claims, which were removed to federal court and consolidated, refusal of instructions, requested by defendant, submitting issue of adverse possession, which was raised by evidence, was prejudicial error; limitations being defense under Nevada statutes, applicable to actions to recover mining claims.—Ralph v. Cole, 133.

II. TITLE, CONVEYANCES, AND CONTRACTS.

(C) Leases, Licenses, and Contracts.

⚷58 (U.S.C.C.A.Ky.) Oil and gas lease, granted in consideration of $1 actually paid, under which lessee covenanted to complete well within one year, or to pay 10 cents an acre yearly in advance for each additional year that such completion was delayed, and further covenanted to pay lessor one-eighth of all oil produced, *held* valid, despite provisions for surrender by lessee on payment of $1.—Raydure v. Lindley, 585.

MINORITY STOCKHOLDERS.

See Corporations, ⚷211.

MISREPRESENTATION.

See Fraud.

MISTAKE.

See Sales, ⚷36.

MODIFICATION.

See Contracts, ⚷247; Frauds, Statute of, ⚷119.

MOOT QUESTIONS.

See Appeal and Error, ⚷781.

MORTGAGES.

See Appeal and Error, ⚷781; Bankruptcy, ⚷213, 262, 334, 345; Chattel Mortgages; Costs, ⚷197; Frauds, Statute of, ⚷63; Injunction, ⚷235; Judgment, ⚷649.

I. REQUISITES AND VALIDITY.

(A) Nature and Essentials of Conveyances as Security.

⚷32(3) (U.S.C.C.A.Miss.) While relation of debtor and creditor is essential to existence of mortgage, conveyance absolute in form, but as security for debts of grantor, which the grantee agreed to assume, will be treated in equity as a mortgage; debts not being extinguished by the conveyance.—Bolin v. Wilkes, 615.

⚷33(5) (U.S.C.C.A.Porto Rico) Where record owners of land, to which they had taken title by absolute conveyance, leased it to their grantor with option to purchase, they were not mortgagees, but owners of the land.—Franceschi Jones, 3.

⚷37(2) (U.S.C.C.A.Miss.) A conveyance of land absolute in form, without an accompanying defeasance, contract of repurchase, or other agreement in writing, may, in equity, by extrinsic and parol evidence, be shown to be a mortgage, without violating parol evidence rule or statute of frauds.—Bolin v. Wilkes, 615.

Where land was conveyed by deed absolute on its face as security for debt, and representative of grantor remained in possession of either whole or part of premises, Code Miss. 1906, § 4783, declaring parol evidence inadmissible to show certain conveyances to be mortgages, has no application.—Id.

Under Code Miss. 1906, § 4783, parol evidence is admissible to show that written memoran-

Digitized by Google

dum executed by grantee, acknowledging mortgage character of absolute deed, was delivered, and that person to whom it was addressed was acting for grantor, since statute would not exclude all oral evidence when controlling features are established by written evidence.—Id.

X. FORECLOSURE BY ACTION.

(E) Parties and Process.

⚷427(1) (U.S.C.C.A.N.Y.) The mortgagor, or, if he has conveyed before suit brought, his grantee, is a necessary party to an action to foreclose, and, if not made a party, his equity of redemption is not foreclosed.—In re Soltmann, 413.

(J) Sale.

⚷534 (U.S.C.C.A.S.C.) Purchaser at foreclosure sale in suit to which grantee of mortgagor was not party obtains only equitable assignment of mortgage.—Williamson & Brown Land & Lumber Co. v. Mullins Lumber Co., 448.

(L) Disposition of Proceeds and Surplus.

⚷567(1) (U.S.C.C.A.N.Y.) Where mortgagor was not a party to a suit to foreclose, nor was his trustee in bankruptcy made a party, a purchaser at such foreclosure sale becomes an assignee of the mortgage, and if he enters into possession, becomes a mortgagee in possession; so, on foreclosure of prior mortgage, purchaser would be entitled to surplus, etc.—In re Soltmann, 413.

XI. REDEMPTION.

⚷591(3) (U.S.C.C.A.Miss.) The parties to a mortgage cannot, by any stipulation or contract therein or contemporaneous therewith, extinguish the right of redemption; and this is so, though the conveyance be absolute in form.—Bolin v. Wilkes, 615.

⚷596, 597 (U.S.C.C.A.Miss.) A mortgagor may, by an agreement based on sufficient consideration and entered into after the execution of the mortgage, release his equity of redemption; likewise he may estop himself from asserting that right.—Bolin v. Wilkes, 615.

⚷608½ (U.S.C.C.A.Miss.) As an incident to a suit to have a deed declared a mortgage, court of equity has jurisdiction to declare an accounting for the profits received from the property.—Bolin v. Wilkes, 615.

A bill seeking to have a deed of lands partly located in Mississippi declared a mortgage *held* to sufficiently charge fraud, so as to take the case out of Code Miss. 1906, § 4783.—Id.

Sufficiency of bill is not to be determined by consideration of whether pleader will be able to establish his allegations, so bill seeking to have deed absolute on its face declared mortgage is not subject to attack under Code Miss. 1906, § 4783, on ground that character of instrument could only be established by parol, where bill set up writings showing mortgage character of deed.—Id.

MOTIVE.

See Evidence, ⚷81.

MUNICIPAL CORPORATIONS.

See Street Railroads.

MUSIC.

See Copyrights, ⚷12.

NAMES.

See Trade-Marks and Trade-Names.

NARCOTICS.

See Criminal Law, ⚷369; Poisons, ⚷4.

NATURALIZATION.

See Criminal Law, ⚷1128, 1169; Perjury, ⚷25, 26.

NAVIGABLE WATERS.

I. RIGHTS OF PUBLIC.

⚷33 (U.S.C.C.A.La.) Right which public in Louisiana has to use banks of navigable rivers does not entitle one other than a riparian proprietor to appropriate part of such bank to his private use, and a riparian proprietor has such an interest, distinct from that of the public, that he may recover for another's appropriation of a part of the bank to a private use.—Pittsburgh & Southern Coal Co. v. Otis Mfg. Co., 577.

Const. La. art. 290, enabling riparian owners whose property is bounded by a navigable stream, subject to stated conditions, to become the agency for making public use of the batture or banks owned by them, does not limit the right of a riparian proprietor to complain of an unauthorized private use of his property by another.—Id.

II. LANDS UNDER WATER.

⚷36(3) (U.S.C.C.A.La.) Under Civ. Code La. arts. 455, 457, land between a levee and a navigable river is the property of a riparian proprietor, though subject to public use.—Pittsburgh & Southern Coal Co. v. Otis Mfg. Co., 577.

NECESSARY PARTIES.

See Mortgages, ⚷427.

NEGLIGENCE.

See Carriers, ⚷121, 136, 318; Collision; Death; Electricity, ⚷19; Landlord and Tenant, ⚷167; Master and Servant, ⚷100–289; Railroads, ⚷301–350; Seamen, ⚷29; Shipping, ⚷84, 101, 120, 166; Towage, ⚷15.

NEGOTIABLE INSTRUMENTS.

See Bills and Notes.

NEWLY DISCOVERED EVIDENCE.

See New Trial, ⚷108.

Digitized by Google

NEW TRIAL.

See Appeal and Error, ⚷110, 169.

II. GROUNDS.

(H) Newly Discovered Evidence.

⚷108(1) (U.S.C.C.A.Ohio) On writ of error to review judgments in plenary actions by trustee in bankruptcy attacking as preferential payments by bankrupt, evidence alleged to have been newly discovered since the judgments were entered *held* not of such a character as would probably produce a different result.—Turner v. Schaeffer, 564.

NOTES.

See Bills and Notes.

NOTICE.

See Appeal and Error, ⚷397; Bankruptcy, ⚷166; Banks and Banking, ⚷117; Bills and Notes, ⚷339; Carriers, ⚷83; Public Lands, ⚷103; Shipping, ⚷142; United States, ⚷67.

NOVATION.

⚷5 (U.S.C.C.A.N.Y.) A "novation" is the substitution of one debtor in place of another; the old debt being extinguished.—Rensselaer & S. R. Co. v. Irwin, 636.

NOVELTY.

See Patents, ⚷37, 42.

OBJECTIONS.

See Appeal and Error, ⚷231; Bankruptcy, ⚷413; Courts, ⚷276; Criminal Law, ⚷1043.

OBLIGATION OF CONTRACTS.

See Constitutional Law, ⚷163.

OFFICERS.

See Banks and Banking, ⚷109, 117; Corporations, ⚷406, 426; Joint-Stock Companies, ⚷18; Receivers.

OIL.

See Mines and Minerals, ⚷58.

OPINION EVIDENCE.

See Evidence, ⚷533.

OPTIONS.

See Sales, ⚷24; Shipping, ⚷58; Specific Performance, ⚷126; Vendor and Purchaser, ⚷70.

OVERT ACT.

See Conspiracy, ⚷28, 43.

PANAMA.

See Evidence, ⚷37.

PARENT AND CHILD.

See Death, ⚷69, 99.

⚷9 (U.S.C.C.A.Okl.) While equity will closely scan contract between parent and child, entered into shortly after child reached his majority, yet contract is not prima facie void, and where not unconscionable, and made by child with complete understanding, will not be stricken down.—Williams v. Canary, 352.

PAROL EVIDENCE.

See Mortgages, ⚷37.

PARTIAL ASSIGNMENT.

See Assignments, ⚷58.

PARTIES.

For parties on appeal and review of rulings as to parties, see Appeal and Error.

For parties to particular proceedings or instruments, see also the various specific topics.

PARTNERSHIP.

See Bankruptcy, ⚷31, 81, 91, 404; Corporations, ⚷379; Internal Revenue, ⚷7; Joint Adventures; Joint-Stock Companies; Judgment, ⚷721.

I. THE RELATION.

(A) Creation and Requisites.

⚷5 (U.S.C.C.A.Mich.) The relation of the parties is determined by their intention, and mere participation in profits will not alone establish a partnership.—Reid v. Shaffer, 479.

IV. RIGHTS AND LIABILITIES AS TO THIRD PERSONS.

(A) Representation of Firm by Partner.

⚷139 (U.S.C.C.A.Hawaii) Any member may bind partnership by contract, though partnership is composed of corporations.—Haiku Sugar Co. v. Johnstone, 155.

V. RETIREMENT AND ADMISSION OF PARTNERS.

⚷224 (U.S.C.C.A.Hawaii) While in a joint-stock company the members have no right to decide what new members shall be admitted, the right of delectus personarum is an inherent quality of an ordinary partnership.—Haiku Sugar Co. v. Johnstone, 155.

⚷227 (U.S.C.C.A.Hawaii) A partnership, though it may consist of several, is ordinarily made up of members who are drawn to each other by feelings of mutual confidence; hence no member is at liberty to retire and substitute another.—Haiku Sugar Co. v. Johnstone, 155.

VII. DISSOLUTION, SETTLEMENT, AND ACCOUNTING.

(A) Causes of Dissolution.

⚷264 (U.S.C.C.A.Hawaii) The provision in the by-laws of a partnership composed of corporations for existence of the association for 45 years, unless sooner terminated by mutual

Digitized by Google

consent, does not show any plan for changeability in the membership, and dissolution would probably be effected through the transfer of any partner's interest.—Haiku Sugar Co. v. Johnstone, 155.

PASSBOOKS.

See Banks and Banking, ⚷166.

PASSENGERS.

See Carriers, ⚷318; Shipping, ⚷166.

PATENTS.

See Contracts, ⚷108; Master and Servant, ⚷62; Specific Performance, ⚷71.

I. SUBJECTS OF PATENTS.

⚷15 (U.S.C.C.A.N.Y.) Where an inventor at the same time devises a container for electric light of pleasing design and a mechanical contrivance conveniently united with an æsthetic cover, he has made two inventions, and, though he at first secures only a mechanical patent, he may within the two-year period procure a design patent, without violating the rule against double patenting.—Bayley & Sons v. Standart Art Glass Co., 436.

A design patent for an ornamental electric light fixture must be viewed in its entirety; its effect being optical.—Id.

II. PATENTABILITY.

(A) Invention.

⚷16 (U.S.C.C.A.Ohio) A device may be at the same time an infringement upon the relatively generic claim of a prior patent and also be a patentable improvement thereon.—General Electric Co. v. Cooper Hewitt Electric Co., 121.

⚷36 (U.S.C.C.A.N.Y.) The fact alone that a patented article has been commercially successful is an unsafe test of invention.—National Sweeper Co. v. Bissell Carpet Sweeper Co., 232.

(B) Novelty.

⚷37 (U.S.C.C.A.N.J.) The union of selected elements from various sources in a patented structure may be an improvement upon anything the art contains; but if, in combining them, no novel idea is developed, there is no patentable invention, however great the improvement may be.—Turner v. Lauter Piano Co., 48.

⚷42 (U.S.C.C.A.N.Y.) Whether it is patentable novelty to change the old parts of a well-known machine depends on whether the result is new or merely an improvement.—Mayer v. A. & H. G. Mutschler, 29.

(E) Prior Public Use or Sale.

⚷76 (U.S.C.C.A.N.Y.) An inventor's sale of even one experimental machine is a disclosure to the public of the invention, which is a defense to an action for infringement of the patent.—Mayer v. A. & H. G. Mutschler, 29.

Though an inventor transferred by formal bill of sale an experimental machine, merely for the purpose of defeating his creditors, he cannot, where a patent subsequently issued was questioned on the ground of prior use, contend, for the purpose of defeating the rights of the public, that the bill of sale was in reality a mortgage.—Id.

⚷81 (U.S.C.C.A.Ill.) Patent is not open to attack because invention was disclosed in patent subsequently issued, where there was no clear showing of prior use of device last patented.—Automatic Pencil Sharpener Co. v. Stewart Mfg. Co., 112.

III. PERSONS ENTITLED TO PATENTS.

⚷91(1) (U.S.C.C.A.Ill.) The burden rests on complainant in an infringement suit to prove that the patentee was the original and first inventor of the thing patented.—West Coast Roofing & Mfg. Co. v. Elaborated Ready Roofing Co., 257.

IV. APPLICATIONS AND PROCEEDINGS THEREON.

⚷101 (U.S.C.C.A.N.Y.) One claim, or set of claims, cannot be helped out by judicial incorporation therein of other claims, or parts thereof, in the patent application.—Mayer v. A. & H. G. Mutschler, 29.

⚷109 (U.S.C.C.A.Ohio) Insertions by way of amendment in the description or drawing, or both, of a patent application, are not new matter which invalidates the patent, if they are only in amplification and explanation of what was already reasonably indicated to be within the invention.—General Electric Co. v. Cooper Hewitt Electric Co., 121.

⚷112(3) (U.S.C.C.A.Cal.) Issuance of patent creates prima facie presumption of patentable difference between the device for which a patent was issued and an earlier patented invention.—Wonder Mfg. Co. v. Block, 658.

V. REQUISITES AND VALIDITY OF LETTERS PATENT.

⚷125 (U.S.C.C.A.Ill.) The failure of an applicant to prosecute his application within two years after it was filed does not invalidate a patent afterward granted thereon; such allowance being within the jurisdiction given the Commissioner by Rev. St. § 4894 (Comp. St. 1916, § 9438).—Schram Glass Mfg. Co. v. Homer Brooke Glass Co., 264.

IX. CONSTRUCTION AND OPERATION OF LETTERS PATENT.

(A) In General.

⚷157(1) (U.S.C.C.A.Ill.) A clause at the beginning of the claims of a mechanical patent, stating the purpose of the device, is not to be ignored as not describing any element, but is a modifying clause, to be read upon every element thereafter described.—Schram Glass Mfg. Co. v. Homer Brooke Glass Co., 264.

(B) Limitation of Claims.

⚷165 (U.S.C.C.A.Cal.) A patent is no broader than its claims; and, if the language of the claims is clear and distinct, the patentee is bound thereby.—Wilson & Willard Mfg. Co. v. Union Tool Co., 639.

⚷167(1) (U.S.C.C.A.Ohio) In determining whether a patent shows an inventive advance

Digitized by Google

over a prior patent, the structure disclosed by the specification and drawings of the prior patent, and not the language of its claims, is to be considered.—General Electric Co. v. Cooper Hewitt Electric Co., 121.

⚷168(2) (U.S.C.C.A.Mich.) An inventor's acquiescence in the rejection of a broad claim, and his acceptance in its place of one distinctly limited, estops him from thereafter seeking the benefit so surrendered; and this regardless of whether the Patent Office was right or wrong in rejecting the original claim.—Vanmanen v. Leonard, 57.

⚷172 (U.S.C.C.A.Cal.) Where a patentee was not the first in the field, and there had been earlier similar inventions, the scope of the invention must be deemed limited, by the language of the claim, to the construction therein specified.—Wonder Mfg. v. Block, 658.

X. TITLE, CONVEYANCES, AND CONTRACTS.

(B) Assignments and Other Transfers.

⚷200 (U.S.C.C.A.Mass.) In suit to avoid assignment of patent on ground of fraud, evidence *held* insufficient to establish alleged fraud.—Fuller v. Reed, 210.

XII. INFRINGEMENT.

(A) What Constitutes Infringement.

⚷238 (U.S.C.C.A.Cal.) That an alleged infringer does not use all the features of the patented device does not negative infringement.—Union Tool Co. v. Wilson, 646.

⚷241 (U.S.C.C.A.Cal.) That defendant's machine accomplished same result as complainant's patented device does not show infringement, where there was variation in means used.—Stebler v. Porterville Citrus Ass'n, 45.

⚷241 (U.S.C.C.A.Cal.) To make one mechanical device the equivalent of another, so as to establish infringement, it must appear not only that it produces the same effect, but that such effect is produced substantially by the same mode of operation.—Wilson & Willard Mfg. Co. v. Union Tool Co., 639.

⚷246 (U.S.C.C.A.Cal.) While a combination of elements, all of which are old in the art, may be invention, the combination must be considered as a unitary structure, and, if a defendant omits one or more of the material elements, he does not infringe.—Wilson & Willard Mfg. Co. v. Union Tool Co., 639.

(C) Suits in Equity.

⚷311 (U.S.C.C.A.Cal.) Where defendant does not deny validity of the patent, evidence of prior inventions or patents is receivable only to show the state of the art and to aid in construction of the patent.—Simplex Window Co. v. Hauser Reversible Window Co., 37.

⚷312(1) (U.S.C.C.A.Cal.) That defendant's alleged infringing device is made under a later patent is not presumptive evidence of noninfringement.—Simplex Window Co. v. Hauser Reversible Window Co., 37.

⚷312(2) (U.S.C.C.A.Cal.) Though earlier patent was not set up in answer or by notice, it is admissible in infringement suit as evidence of state of prior art and to aid in construing claims of patent.—Wonder Mfg. Co. v. Block, 658.

Though prior patent was mere paper patent, and there was no evidence that invention had ever been used, it is admissible on question whether device infringes subsequently issued patent.—Id.

⚷314 (U.S.C.C.A.Cal.) Under equity rules 19 (198 Fed. xxiii, 115 C. C. A. xxiii) and 26 (201 Fed. v, 118 C. C. A. v) a District Court has power to consolidate for trial patent causes which involve the same patent, where the parties are the same, although it effected a broadening out of the charge of infringement over a prior election in the record.—Union Tool Co. v. Wilson, 646.

⚷324(5) (U.S.C.C.A.Cal.) Where trial court, in an infringement suit, has had advantage of examining alleged infringing article, appellate court, without such advantage, will not disturb conclusion reached, unless clearly against weight of evidence.—Diamond Patent Co. v. Webster Bros., 207.

⚷324(5) (U.S.C.C.A.Cal.) On appeal from interlocutory injunction in patent case, appellate court will go no further than to ascertain whether court below abused its discretion: therefore, where it was not disputed that there was infringement by defendant, question of extent of infringement will not be reviewed.—Wonder Mfg. Co. v. Block, 658.

XIII. DECISIONS ON THE VALIDITY, CONSTRUCTION, AND INFRINGEMENT OF PARTICULAR PATENTS.

⚷328.

UNITED STATES.

DESIGN.

43,514. Goggle frame, held void..... 664
49,593. Ornamental electric lighting fixtures, held invalid..... 436

ORIGINAL.

640,846. Pencil sharpener, held valid and infringed 112
705,732. Retaining wall, held not infringed 247
723,983. Apparatus for cutting and distributing molten material, held not anticipated, valid and infringed 264
734,833. Underreamer, construed and held not infringed..... 639
775,015. Fruit grader, held not infringed 45
798,406. Railway water column, held valid and infringed..... 270
801,944. Glass showcase, held not infringed 207
810,104. Pencil sharpener, held not infringed 112
818,968. Railway water column, held not anticipated, valid and claims 1, 21, and 38 held infringed.... 270
827,595. Underreamer, held not anticipated and valid and claims 9 and 19 infringed..... 646
839,806. Pencil sharpener, held not infringed 112
883,725. Method of operating vapor lamps, claim 1, held void..... 129

Digitized by Google

904,665. Journal box, claim 2, held valid and infringed; claim 3 held not infringed 239
924,966. Road-grading machine, claims 2 and 17, held valid, but not infringed 116
943,799. Fruit distributing apparatus, held not infringed..... 34
969,933. Journal box, held valid and infringed 239
985,119. Steel skeleton concrete construction, claims 4 and 8, held void.. 48
claims 1, 2, 4, 6 and 8, held void 662
988,677. Warehouse truck, claim 4, held not infringed..... 57
996,810. Pneumatic carpet cleaner, held void 235
1,003,384. Steel skeleton concrete construction, claims 1, 5, 10, 11, 16, and 17, held void..... 48
1,014,155. Rail anchor, held not anticipated, valid, and infringed..... 251
1,024,549. Ornamental prepared roofing and process of making, held void 257
1,024,550. Ornamental prepared roofing and process of making, held void 257
1,043,021. Machine for coating paper, held invalid 29
1,061,353. Arch support, claims 1 and 4 held not infringed 658
1,072,669. Window, held valid and infringed 37
1,090,992. Mercury vapor lamp, held valid and infringed 121
1,113,116. Ornamental prepared roofing and process of making, held not infringed 257
1,123,376. Eye shield, claim 4 held void, other claims held not infringed 276
1,127,349. Arch support, held anticipated as to claim 1, and held limited as to claim 2..... 658
1,138,437. Carpet cleaner, held void..... 232
1,157,664. Process of making ornamental prepared roofing, held void 257
1,157,665. Ornamental prepared roofing, held void in part and in part not infringed 257
1,182,398. Eye shield, claims 5, 6, 7, 8, and 9, held void; claims 1, 2, 3, 4, and 10, held valid and infringed 276

REISSUED.

13,408. Pneumatic carpet cleaner, held void 237

PAUPERS.

See Appeal and Error, ⚷773.

PAVEMENTS.

See Street Railroads, ⚷55.

PAYMENT.

See Limitation of Actions, ⚷158, 163.

I. REQUISITES AND SUFFICIENCY.

⚷12(5) (U.S.C.C.A.Tex.) Where, pursuant to contract made in Mexico for sale of corn, buyer deposited $500 to credit of seller, deposit must, as price of corn was fixed in Mexican currency, be deemed to have been made in that medium; so, on suit in United States, the seller could not be charged $500 in United States money, a Mexican dollar at time of deposit having been worth only 44 cents.—Wormser Bros. v. F. Marroquin & Co., 402.

PENALTIES.

See Carriers, ⚷37; Master and Servant, ⚷13.

PENDENCY OF ACTION.

See Abatement and Revival, ⚷14.

PERJURY.

See Criminal Law, ⚷1128, 1169.

II. PROSECUTION AND PUNISHMENT.

⚷25(1) (U.S.C.C.A.La.) Under Act June 29, 1906, § 23, indictment charging that defendant in a naturalization proceeding knowingly gave false testimony as to a material fact need not aver that the fact was one required to be proven in such proceeding, that requirement being applicable only to affidavits.—Gregorat v. United States, 428.

⚷26(½) (U.S.C.C.A.La.) An indictment charging that, in violation of Act June 29, 1906, § 23, defendant falsely testified in naturalization proceedings that he had never operated a saloon, etc., *held* to sufficiently aver falsity of defendant's testimony.—Gregorat v. United States, 428.

⚷26(3) (U.S.C.C.A.La.) Under Act June 29, 1906, § 23, punishing one who knowingly gives false testimony in a naturalization proceeding, an indictment alleging that defendant did unlawfully, willfully, and knowingly give false testimony is sufficient.—Gregorat v. United States, 428.

PERSONAL INJURIES.

See Carriers, ⚷318; Master and Servant, ⚷100–289; Seamen, ⚷29; Shipping, ⚷84, 166.

PETITION.

See Bankruptcy, ⚷76, 81, 84.

PLEADING.

See Indictment and Information.
For pleadings in particular actions or proceedings, see also the various specific topics.
For review of rulings relating to pleadings, see Appeal and Error.

XII. ISSUES, PROOF, AND VARIANCE.

⚷370 (U.S.C.C.A.N.Y.) An issue is a single certain and material point arising out of allegations of parties, and should generally be made up of an affirmative and negative.—Cowen Co. v. Houck Mfg. Co., 293.

Digitized by Google

PLEDGES.

See Corporations, ⚷123; Evidence, ⚷354.

⚷25 (U.S.C.C.A.N.D.) Pledgee of promissory notes, residing in city other than that where notes are payable, does not lose title by sending them to pledgor for collection, where pledgor received them for that purpose only, unless they are assigned in due course, for value, before maturity, and without notice to bona fide purchaser.—Stockyards Nat. Bank of St. Paul, Minn., v. First Nat. Bank of Towner, N. D., 395.

POISONS.

See Criminal Law, ⚷369.

⚷4 (U.S.C.C.A.N.Y.) Where parties had agreed on all terms of sale of narcotic drugs in violation of Harrison Act, and only payment and delivery remained, sale was properly treated as consummated.—Hammer v. United States, 344.

POSSESSION.

See Adverse Possession; Trespass, ⚷20.

POST OFFICE.

See Conspiracy, ⚷47; Criminal Law, ⚷814, 1043.

III. OFFENSES AGAINST POSTAL LAWS.

⚷35 (U.S.C.C.A.Ohio) Where defendant, who made a compound under the name of a rare and high-priced drug, used the mails for the purpose of ordering his materials, such use of the mails falls within Criminal Code, § 215, denouncing offense of using mails in connection with scheme to defraud.—Edwards v. United States, 596.

⚷48(2) (U.S.C.C.A.N.Y.) Indictment charging violation of Criminal Code, § 211, in that defendant deposited in mails matter giving information from whom, etc., contraconceptives might be procured, *held* to charge offense with sufficient certainty.—Pilson v. United States, 336.

⚷49 (U.S.C.C.A.Cal.) Evidence *held* insufficient to show that defendant devised a scheme to defraud by use of the mails, contrary to Criminal Code, §§ 37, 215, in negotiating an exchange of property between complaining witness and another.—Stubbs v. United States, 497.

⚷49 (U.S.C.C.A.N.Y.) In prosecution for violating Criminal Code, § 211, by depositing in mails letter and circular giving information as to where, how, and from whom contraconceptives could be obtained, evidence *held* sufficient to warrant conviction.—Pilson v. United States, 336.

⚷49 (U.S.C.C.A.Ohio) In prosecution under Criminal Code, § 215, for using mails in connection with a scheme to defraud, where defendant sold a compound of drugs as acetyl salicylic acid under labels indicating that it was made in Germany, and drugs of that class were commonly made there, etc., jury might consider false labels on question whether defendant intended to defraud.—Edwards v. United States, 596.

PRACTICE.

For practice in particular actions and proceedings, see the various specific topics.

PREFERENCES.

See Bankruptcy, ⚷163, 166, 303.

PRESCRIPTION.

See Adverse Possession; Limitation of Actions.

PRESIDENT.

See Corporations, ⚷426.

PRESUMPTIONS.

See Appeal and Error, ⚷907, 927; Evidence, ⚷60–81.

PRINCIPAL AND ACCESSORY.

See Criminal Law, ⚷59.

PRINCIPAL AND AGENT.

See Bankruptcy, ⚷76; Brokers.

II. MUTUAL RIGHTS, DUTIES, AND LIABILITIES.

(A) Execution of Agency.

⚷48 (U.S.C.C.A.Mich.) Absolute faithfulness and loyalty are required of an agent in whom confidence is placed, and personal benefit to him secretly obtained is incompatible with relation to agency.—Reid v. Shaffer, 479.

PRIORITIES.

See Bankruptcy, ⚷192, 345, 347.

PRIOR USE.

See Patents, ⚷76, 81.

PRIVATE CARRIERS.

See Shipping, ⚷101.

PROCESS.

See Appearance, ⚷9; Injunction, ⚷56.

II. SERVICE.

(D) Privileges and Exemptions.

⚷119 (U.S.C.C.A.Canal Zone) Where a litigant came from Panama into Canal Zone for sole purpose of being present in court at hearing of motion made in case brought there against him, and to testify in that hearing if occasion for his doing so arose, such litigant was exempt from service of Canal Zone process while in attendance upon court and during a reasonable time in coming and going.—Smith v. Government of Canal Zone, 281.

PROFITS.

See Cancellation of Instruments, ⚷58; Mortgages, ⚷608½; Partnership, ⚷5; Shipping, ⚷58.

Digitized by Google

PROMISSORY NOTES.

See Bills and Notes.

PUBLIC LANDS.

See Mines and Minerals, ⚷38.

II. SURVEY AND DISPOSAL OF LANDS OF UNITED STATES.

(B) Entries, Sales, and Possessory Rights.

⚷40 (U.S.C.C.A.Cal.) Failure of entryman on arid lands, withdrawn under Act June 17, 1902, § 3, as susceptible of irrigation, to continuously reside upon or cultivate land which, though later withdrawn for irrigation works, was finally released during time when no reclamation project had been devised or installed, cannot be deemed an abandonment, in view of Act June 27, 1906, § 5.—Edwards v. Bodkin, 488.

(C) Donations and Bounty Lands.

⚷46 (U.S.C.C.A.Cal.) Scrip issued under law and regulations relating to soldiers' additional homestead rights is subject to regulations of Land Department, and also to equitable rule that actual settler is to be preferred over claimants who seek to assert scrip rights to public domain.—Edwards v. Bodkin, 488.

(I) Proceedings in Land Office.

⚷96 (U.S.C.C.A.Cal.) While Reclamation Act, § 10, authorizes Secretary of Interior to make such regulations as may be necessary and proper to carry act into full force and effect, he is not authorized to amend, modify, or change Act May 14, 1880, § 2, fixing rights of a successful contestant, who has secured cancellation of any pre-emption, homestead, or timber culture entry.—Edwards v. Bodkin, 488.

⚷102 (U.S.C.C.A.Cal.) Any right under regulation 7 of June 6, 1905, issued by Secretary of Interior under Reclamation Act, § 10, which successful contestant of homestead entry on land withdrawn as susceptible of irrigation might have had, was lost by promulgation of regulation 6 of January 19, 1909, as land before termination of contest or entry by contestant was withdrawn for irrigation works.—Edwards v. Bodkin, 488.

⚷103(1) (U.S.C.C.A.Cal.) Notice of contest, in support of which contestant made oath that he did not know and had no means of knowing facts, is insufficient to initiate contest.—Edwards v. Bodkin, 488.

Where contest against actual entryman under homestead laws was sustained, entryman's protest against contestant's lieu land selection should not be denied, on ground that he had not served contestant with copy of appeal, for, while decision of Land Department on questions of fact is final, it is based on presupposition of hearing in good faith.—Id.

⚷106(2) (U.S.C.C.A.Cal.) While decision of Land Department that entry was abandoned is conclusive as to facts, it may be inquired into by courts as question of law.—Edwards v. Bodkin, 488.

V. SPANISH, MEXICAN, FRENCH, AND RUSSIAN GRANTS.

⚷209 (U.S.C.C.A.Porto Rico) Though United States, on cession of Porto Rico by Spain, acquired reversion to lands held under royal lease, and was authorized under Rev. St. and Codes Porto Rico, § 4578, to declare forfeiture of lease on account of lessee's failure to pay rent, such forfeiture, to be effective, must be declared by Congress by some legislative action.—Porto Rico Ry., Light & Power Co. v. United States, 76.

PUBLIC POLICY.

See Contracts, ⚷108.

PUBLIC SERVICE CORPORATIONS.

See Carriers; Railroads; Telegraphs and Telephones; Street Railroads.

PUFFING.

See Fraud, ⚷11.

QUANTUM MERUIT.

See Work and Labor.

RAILROADS.

See Carriers; Constitutional Law, ⚷42; Eminent Domain; Internal Revenue, ⚷7, 28; Master and Servant; Street Railroads; Telegraphs and Telephones, ⚷11.

X. OPERATION.

(B) Statutory, Municipal, and Official Regulations.

⚷229 (U.S.C.C.A.Mich.) Main purpose of Safety Appliance Act, requiring equipment of freight trains with power and train brakes, was to protect brakemen, who theretofore had been required to go on tops of moving trains to set the hand brakes.—Grand Rapids & I. Ry. Co. v. United States, 560.

(F) Accidents at Crossings.

⚷301 (U.S.C.C.A.Mo.) The driver of a railway motorcar has the right of way at a highway crossing over an automobile on the highway.—Kansas City, C. & S. Ry. Co. v. Shoemaker, 416.

⚷327(1) (U.S.C.C.A.Mo.) Automobile driver, approaching railroad crossing, had primary duty of looking and listening for trains and motorcars, and of stopping before colliding with any of them.—Kansas City, C. & S. Ry. Co. v. Shoemaker, 416.

⚷346(5) (U.S.C.C.A.Ohio) In crossing accident case, railroad company, asserting traveler's contributory negligence, has burden of proof.—Pennsylvania Co. v. Avran, 432.

⚷350(15) (U.S.C.C.A.Ohio) In action by plaintiff, who was struck by a train while crossing defendant's tracks, question whether plaintiff, who, with her companions, walked around front end of standing yard engine, which had been obstructing crossing for longer than allowed, was guilty of contributory negligence, view being obstructed by smoke, *held*, under

Digitized by Google

evidence, for jury.—Pennsylvania Co. v. Avran, 432.

RATE.

See Carriers, ⚷202.

RATIFICATION.

See Corporations, ⚷426.

REAL ACTIONS.

See Ejectment.

REARGUMENT.

See Appeal and Error, ⚷828.

REASONABLE DOUBT.

See Criminal Law, ⚷811.

RECEIPTS.

See Carriers, ⚷52.

RECEIVERS.

See Bankruptcy, ⚷117, 144, 145, 287, 345, 347, 440, 474; Banks and Banking, ⚷166; Corporations, ⚷556, 557; Courts, ⚷262, 263, 276; Jury, ⚷31.

II. APPOINTMENT, QUALIFICATION, AND TENURE.

⚷58 (U.S.C.C.A.Ohio) Though under circumstances appointment of receiver to carry on business of bankrupt corporation formed to manufacture tractors appeared to have been justified, as necessary for preservation of property and for best interests of estate, trial court is entitled to know all the facts in case, and, where appointment was induced by misrepresentations, receivership may be set aside.—In re Veler, 543.

Where District Judge, after appointing receiver, became suspicious that he had been imposed upon, two courses were open to him: To direct some procedure for framing of issues by which parties charged with misconduct might know charge and have opportunity to try fact, or to satisfy himself by summary inquiry as to whether such proceeding should be instituted; summary determination that courts had been imposed upon, without framing issues, was improper.—Id.

VI. ACTIONS.

⚷170 (U.S.C.C.A.N.J.) The general rule that receivers succeed to the right of a corporation to plead the defense of limitation does not apply where, owing to the peculiar circumstances of the case, the receivers do not represent the corporation, its stockholders, or creditors.—Stokes v. Williams, 166.

Receivers *held* not entitled to set up the defense of limitation to an otherwise valid claim against a corporation, where it would inure only to the benefit of an outside party.—Id.

RECLAMATION.

See Public Lands, ⚷96. 102.

RECORDS.

See Appeal and Error, ⚷544, 671; Army and Navy, ⚷40; Criminal Law, ⚷430, 441, 1092, 1128; Evidence, ⚷383.

REDEMPTION.

See Mortgages, ⚷591-608½.

REGISTRATION.

See Army and Navy, ⚷40; Criminal Law, ⚷430, 441.

REHEARING.

See New Trial.

RELEASE.

See Action, ⚷23; Master and Servant, ⚷100.

REMEDY AT LAW.

See Equity, ⚷220, 362; Trial, ⚷11.

REPORT.

See Admiralty, ⚷73.

REQUESTS.

See Criminal Law, ⚷829; Trial, ⚷258.

RESCISSION.

See Cancellation of Instruments; Sales, ⚷36, 124.

RES IPSA LOQUITUR.

See Electricity, ⚷19.

RES JUDICATA.

See Judgment, ⚷564-721.

RESTORATION.

See Sales, ⚷124.

RESTRICTIONS.

See Deeds, ⚷173. 176.

RESTRICTIVE COVENANTS.

See Injunction, ⚷62.

RETRACTION.

See Fraud, ⚷36, 50.

REVENUE.

See Internal Revenue.

REVIEW.

See Admiralty, ⚷118; Appeal and Error: Bankruptcy, ⚷440-467; Criminal Law, ⚷1043-1169.

RIPARIAN OWNERS.

See Navigable Waters, ⚷33, 36.

Digitized by Google

RULES.

See Master and Servant, ⚷142.

RULES OF COURT.

See Court Rules Cited.

SAFETY APPLIANCE ACT.

See Master and Servant, ⚷142; Railroads, ⚷229.

SALES.

See Bankruptcy, ⚷262; Intoxicating Liquors, ⚷147; Patents, ⚷76; Poisons, ⚷4; Vendor and Purchaser.

I. REQUISITES AND VALIDITY OF CONTRACT.

⚷24 (U.S.C.C.A.N.Y.) Written contract, as modified by defendant's acceptance, relating to sale by defendant of ointment manufactured by plaintiff, *held* merely to give defendant option for purchase of formula for ointment, and not to constitute binding agreement for its purchase.—American Druggists' Syndicate v. Continental Specialty Co. of Baltimore, Md., 298.

⚷36 (U.S.C.C.A.Mo.) Where, through telegraphic correspondence, individual acting under purported name bought linseed oil in large quantities for future delivery, and seller, though diligent in making inquiry, acted under mistaken belief that buyer was corporation, there was no meeting of minds, and seller, having been diligent, was entitled to rescind contract.—Fay v. Hill, 389.

⚷45 (U.S.C.C.A.Mo.) An individual, who for speculative purposes attempted to buy linseed oil for future delivery over long period of time, must be deemed guilty of fraud, warranting cancellation of contract, where he was insolvent and transacted his business under purported corporate name, indicating capital and commercial rating.—Fay v. Hill, 389.

⚷53(1) (U.S.C.C.A.Tex.) In action for value of corn sold under contract entered into in Mexico when that country was in state of great disorder, which required buyer to assume all risks of loss in transportation, provided communications were open, question whether communications were open at time of shipment *held*, under evidence, for jury.—Wormser Bros. v. F. Marroquin & Co., 402.

II. CONSTRUCTION OF CONTRACT.

⚷61 (U.S.C.C.A.N.Y.) In case of controversy as to whether agreement was sale, under which title passed, or whether it was only executory contract, question is one of intention, to be ascertained from actions of parties.—Hammer v. United States, 344.

III. MODIFICATION OR RESCISSION OF CONTRACT.

(C) Rescission by Buyer.

⚷124 (U.S.C.C.A.N.Y.) Where buyer made no offer to return articles delivered, he cannot, despite seller's misrepresentations, rescind contract and escape liability on notes given for purchase price.—Vulcan Metals Co. v. Simmons Mfg. Co., 7.

V. OPERATION AND EFFECT.

(A) Transfer of Title as Between Parties.

⚷201(2) (U.S.C.C.A.Tex.) Where contract for sale of corn in Mexico required buyer to assume all risks of loss during transportation, and to pay drafts with bill of lading attached on presentation, seller cannot recover for corn loaded in cars which was destroyed by fire prior to shipment.—Wormser Bros. v. F. Marroquin & Co., 402.

VII. REMEDIES OF SELLER.

(E) Actions for Price or Value.

⚷348(1) (U.S.C.C.A.N.Y.) Under Code Civ. Proc. N. Y. § 501, buyer, sued on notes given for purchase price, cannot set up as counterclaim action of deceit for seller's misrepresentations.—Vulcan Metals Co. v. Simmons Mfg. Co., 7.

VIII. REMEDIES OF BUYER.

(C) Actions for Breach of Contract.

⚷418(4) (U.S.C.C.A.Mo.) A purchaser of linseed oil for future delivery cannot, the seller having canceled the contract, recover damages in an action at law, where at time of cancellation the market price of the oil was less than contract price.—Fay v. Hill, 389.

⚷418(8) (U.S.C.C.A.Iowa) Where the delivery of metal patterns ordered for use in casting farm tractor engines was unreasonably delayed, the maker, in the absence of a prior notice, is not liable for remote and inconsequential damages resulting to the buyer by reason of the use of wooden patterns during the delay.—Hart-Parr Co. v. Barth Mfg. Co., 539.

SCHEDULE.

See Bankruptcy, ⚷31.

SCRIP.

See Public Lands, ⚷46.

SEAMEN.

See Courts, ⚷356.

⚷29(5) (U.S.C.C.A.Va.) Evidence *held* to sustain findings that injury of a seaman was due to the negligence of the ship, for which it was liable under Seamen's Act, § 20, and that it also failed to give him proper care and treatments.—The Baron Napier, 178.

SECONDARY EVIDENCE.

See Criminal Law, ⚷402.

SECRETARY.

See Corporations, ⚷406, 426.

SECRETARY OF THE INTERIOR.

See Public Lands, ⚷96, 102.

Digitized by Google

SECRET PROCESS.

See Injunction, ⚷56.

SELECTIVE SERVICE ACT.

See Army and Navy, ⚷40; Criminal Law, ⚷430, 441.

SELF-SERVING DECLARATIONS.

See Evidence, ⚷271.

SERVANTS.

See Master and Servant.

SERVICE.

See Appearance, ⚷9; Criminal Law, ⚷631; Process, ⚷119.

SET-OFF AND COUNTERCLAIM.

See Assignments, ⚷126; Sales, ⚷348.

SETTING ASIDE.

See Receivers, ⚷58.

SHIPPING.

See Admiralty; Collision; Evidence, ⚷75; Maritime Liens; Seamen; Towage.

III. CHARTERS.

⚷58(3) (U.S.C.C.A.Va.) A charterer in a suit for breach of charter *held* not entitled to recover for loss of prospective profits during a second term, for which it had an option which it did not exercise.—Clinton v. Smith & Terry, 171.

V. LIABILITIES OF VESSELS AND OWNERS IN GENERAL.

⚷84(3) (U.S.C.C.A.N.Y.) A ship is liable in rem for any injury to a stevedore resulting from a dangerously defective hatch cover furnished by it to the stevedores for their use.—The Colon, 418.

⚷86(2) (U.S.C.C.A.N.Y.) Finding that injury to a stevedore was caused by defective equipment furnished by the ship *held* sustained by the evidence.—The Colon, 418.

VII. CARRIAGE OF GOODS.

⚷101 (U.S.C.C.A.N.Y.) A scow, contracting to carry a cargo to her full capacity, is not a common, but a private, carrier, and is bound only to the exercise of ordinary care and skill.—The C. R. Sheffer, 526.

⚷104 (U.S.C.C.A.N.Y.) Where parties orally agreed upon contract of affreightment by water, intending that written contract should be drawn up, oral contract is binding; parties having acted upon it, and it appearing from forms prepared by each party that there was a meeting of minds on every material term.—West India S. S. Co. v. Chicago House Wrecking Co., 346.

⚷108 (U.S.C.C.A.N.Y.) Measure of damages considered for breach of a contract to furnish tonnage for the carriage of coal between American and Mexican ports.—Munson S. S. Line v. Grimwood, 632.

⚷120 (U.S.C.C.A.N.Y.) A scow, hired to carry a cargo of brick, *held*, on the evidence, not liable for injury to the cargo, caused by her resting on an obstruction when discharging, which broke in the bottom.—The C. R. Sheffer, 526.

⚷132(5) (U.S.C.C.A.N.Y.) Evidence *held* insufficient to show that one of several libelants, who asserted injuries to shipment of goods, gave detailed particulars of his claim as required by the bill of lading, but to warrant a finding that no such particulars were given.—The San Guglielmo, 514.

⚷142 (U.S.C.C.A.N.Y.) Where a bill of lading declared that the steamship owner should not be liable for any loss or damage or claim of which notice was not given within eight days after receipt of goods, it was not sufficient that attention of captain in one case and of persons on wharves directing or supervising discharge of the cargo in another, was called to fact that goods were damaged.—The San Guglielmo, 514.

Though bill of lading declared that steamship owner should not be liable for any claim of which notice was not given before removal of goods, consignees, who removed part of goods without notice, may recover for damage to other goods, which were left on the wharf and later were destroyed by the board of health.—Id.

⚷153 (U.S.C.C.A.N.Y.) Evidence *held* to sustain libelant's contention that shipment was transported pursuant to contract of affreightment previously entered into between parties, and not under an independent engagement.—West India S. S. Co. v. Chicago House Wrecking Co., 346.

VIII. CARRIAGE OF PASSENGERS.

⚷166(3) (U.S.C.C.A.N.Y.) Injury of two passengers on a steamer, by stepping on a line which was being allowed to run out through a chock as the vessel was leaving her pier, although they were twice warned by the mate to stop, *held* due to their own negligence.—In re Keansburg Steamboat Co., 430.

SIGNATURES.

See Exceptions, Bill of, ⚷53.

SOLDIERS.

See Public Lands, ⚷46.

SONGS.

See Copyrights, ⚷12.

SPANISH GRANTS.

See Public Lands, ⚷209.

SPECIAL FINDINGS.

See Trial, ⚷393.

Digitized by Google

SPECIFIC PERFORMANCE.

II. CONTRACTS ENFORCEABLE.

⚷71 (U.S.C.C.A.Mich.) When couched in unambiguous terms, contract obligating inventor to treat all inventions and patents applicable to particular art as property of his employer is specifically enforceable.—Wege v. Safe-Cabinet Co., 606.

IV. PROCEEDINGS AND RELIEF.

⚷126(1) (U.S.C.C.A.S.C.) Complainant *held* entitled to specific performance of contract giving him option to purchase land for which he gave valuable consideration.—Rogers v. Hincle, 474.

SPIRITUOUS LIQUORS.

See Intoxicating Liquors.

SPLITTING CAUSES OF ACTION.

See Action, ⚷53.

STATES.

See Territories, ⚷11.

I. POLITICAL STATUS AND RELATIONS.

⚷9 (U.S.C.C.A.Okl.) When territory is admitted to Union as a state, it stands on same footing as original 13 states, with supreme authority as to all matters of internal government and local concern, subject only to limitations of federal Constitution, and statutes enacted for territory upon subjects of state cognizance are automatically abrogated.—Oklahoma, K. & M. I. Ry. Co. v. Bowling, 518.

Despite Act May 27, 1908, § 1, *held* that, Oklahoma having been admitted to statehood since the passage of Act Feb. 28, 1902, relating to condemnation of rights of way over Indian land, the latter act does not apply to lands conveyed by Indian allottees after restrictions against alienation had expired.—Id.

STATUTE OF FRAUDS.

See Frauds, Statute of.

STATUTE OF LIMITATIONS.

See Limitation of Actions.

STATUTES.

For statutes relating to particular subjects, see the various specific topics.

III. SUBJECTS AND TITLES OF ACTS.

⚷112 (U.S.C.C.A.Ky.) Acts 1898, c. 49 (Ky. St. § 4679c), which authorizes telegraph companies to condemn rights of way, *held* not subject to attack on ground that condemnation provisions were not expressed in its title.—Louisville & N. R. Co. v. Western Union Telegraph Co., 359.

VI. CONSTRUCTION AND OPERATION.

(B) Particular Classes of Statutes.

⚷241(2) (U.S.C.C.A.Okl.) It is a principle of natural law and justice that statutes will not be held to forfeit property, except for the fault of the owner or his agents, unless such a construction is unavoidable.—Shawnee Nat. Bank v. United States, 509.

⚷245 (U.S.C.C.A.Hawaii) In interpretation of statutes levying taxes, it is established rule not to extend their provisions by implication beyond clear import of language used, or to enlarge their operations, so as to embrace matters not specifically pointed out, and in case of doubt they are to be construed most strongly against government.—Haiku Sugar Co. v. Johnstone, 155.

VII. PLEADING AND EVIDENCE.

⚷281 (U.S.C.C.A.Canal Zone) The lex fori is decisive as to necessity and manner of pleading foreign laws on which transitory action is based.—Panama Electric Ry. Co. v. Moyers, 79.

⚷290 (U.S.C.C.A.Canal Zone) In action in district court for Canal Zone on account of damages for collision occurring in Panama, exclusion of evidence as to laws of Panama and facts which were pleaded by defendant as being defense under those laws is improper.—Panama Electric Ry. Co. v. Moyers, 79.

STATUTES CONSTRUED.

UNITED STATES.

CRIMINAL CODE.

See Penal Code.

JUDICIAL CODE.

Act 1911, March 3, ch. 231, 36 Stat. 1087.

§ 50 464
§ 268 521
§ 274b added by Act 1915, March 3, ch. 90, 38 Stat. 956 304

PENAL CODE.

Act 1909, March 4, ch. 321, 35 Stat. 1088.

§ 37 497
§ 125 428
§ 135 521
§ 141 535
§ 211 336
§ 215 ..... 497, 596
§§ 238, 332 339

STATUTES AT LARGE.

1798, July 6, ch. 66, 1 Stat. 577 535
1877, Feb. 27, ch. 69, 19 Stat. 244 101
1880, May 14, ch. 89, § 2, 21 Stat. 141 488
1892, July 23, ch. 234, 27 Stat. 260 101
1893, March 2, ch. 196, 27 Stat. 531 560
1893, March 2, ch. 196, 27 Stat. 531. Amended by Act 1896, April 1, ch. 87, 29 Stat. 85; Act 1903, March 2, ch. 976, 32 Stat. 943 560
1896, April 1, ch. 87, 29 Stat. 85 560

Digitized by Google

1897, Jan. 30, ch. 109, § 1, 29 Stat. 506... 227
1898, July 1, ch. 541, § 1, 30 Stat. 544.... 186
1898, July 1, ch. 541, § 1(9), 30 Stat. 544.. 543
1898, July 1, ch. 541, § 1a(23), 30 Stat. 544 149
1898, July 1, ch. 541, § 3e, 30 Stat. 546 543
1898, July 1, ch. 541, § 5, 30 Stat. 547... 186
1898, July 1, ch. 541, § 14a, 30 Stat. 550 223
1898, July 1, ch. 541, § 19, 30 Stat. 551.. 149
1898, July 1, ch. 541, § 21a, 30 Stat. 551.. 426
1898, July 1, ch. 541, § 23b, 30 Stat. 552... 213
1898, July 1, ch. 541, §§ 24a, b, 25a, 30 Stat. 553..... 221
1898, July 1, ch. 541, § 39a(3), 30 Stat. 555 426
1898, July 1, ch. 541, § 47a, 30 Stat. 557 439
1898, July 1, ch. 541, §§ 47a(5), 49a, 30 Stat. 557, 558..... 426
1898, July 1, ch. 541, §§ 56b, 57e, g, 30 Stat. 560..... 149
1898, July 1, ch. 541, § 57h, 30 Stat. 560 149, 413
1898, July 1, ch. 541, § 59b, f, g, 39 Stat. 561 149
1898, July 1, ch. 541, § 60b, 30 Stat. 562 97, 506
1898, July 1, ch. 541, § 60b, 30 Stat. 562. Amended by Act 1910, June 25, ch. 412, § 11, 36 Stat. 842.....213, 580
1898, July 1, ch. 541, § 60c, 30 Stat. 562 97
1898, July 1, ch. 541, § 63a(4), 30 Stat. 562 149
1898, July 1, ch. 541, § 64, 30 Stat. 563 543
1898, July 1, ch. 541, § 70, 30 Stat. 565 413
1898, July 1, ch. 541, § 70e, 30 Stat. 565. Amended by Act 1903, Feb. 5, ch. 487, § 16, 32 Stat. 800..... 213
1902, Feb. 28, ch. 134, 32 Stat. 43..... 518
1902, June 17, ch. 1093, §§ 3, 10, 32 Stat. 388, 390..... 488
1903, Feb. 5, ch. 487, § 16, 32 Stat. 800.. 213
1903, March 2, ch. 976, 32 Stat. 943.... 560
1905, Feb. 24, ch. 778, 33 Stat. 811..... 330
1906, June 27, ch. 3559, § 5, 34 Stat. 520 488
1906, June 29, ch. 3591, § 7(11), (12), 34 Stat. 595..... 311
1906, June 29, ch. 3592, § 23, 34 Stat. 603 428
1906, June 29, ch. 3594, 34 Stat. 607.... 23
1906, June 30, ch. 3915, 34 Stat. 768.... 596
1907, March 4, ch. 2939, 34 Stat. 1415... 422
1907, March 4, ch. 2939, § 2, 34 Stat. 1416 556
1908, April 22, ch. 149, 35 Stat. 65..161, 288
1908, April 22, ch. 149, § 5, 35 Stat. 66.... 161
1908, May 27, ch. 199, § 1, 35 Stat. 312... 518
1909, March 4. ch. 321, § 37, 35 Stat. 1096 497
1909, March 4, ch. 321, § 125, 35 Stat. 1111 428
1909, March 4, ch. 321, § 135, 35 Stat. 1113 521
1909, March 4, ch. 321, § 141, 35 Stat. 1114 535
1909, March 4, ch. 321, § 211, 35 Stat. 1129 336
1909, March 4, ch. 321, § 215, 35 Stat. 1130 ..... 497, 596
1909, March 4, ch. 321, §§ 238, 332, 35 Stat. 1136, 1152..... 339
1909, Aug. 5, ch. 6, 36 Stat. 112..... 87
1909, Aug. 5, ch. 6, § 38, 36 Stat. 112... 588
1909, Aug. 5, ch. 6, § 38, subsecs. 5, 8, 35 Stat. 112..... 588
1910, April 14, ch. 160, § 5, 36 Stat. 298 560
1910, June 18, ch. 309, § 7, 36 Stat. 544 574
1910, June 25, ch. 412, § 11, 36 Stat. 842 213, 580
1911, March 3, ch. 231, § 50, 36 Stat. 1101 464
1911, March 3, ch. 231, § 268, 36 Stat. 1163 521
1911, March 3, ch. 231 (§ 274b added by Act 1915, March 3, ch. 90, 38 Stat. 956) 304
1913, Oct. 3, ch. 16, 38 Stat. 114..... 155
1913, Oct. 3, ch. 16, § 2, G(a), 38 Stat. 172 .....204, 636
1914, Oct. 15, ch. 323, §§ 21, 22, 24, 38 Stat. 738..... 521
1914, Dec. 17, ch. 1, 38 Stat. 785..... 344
1915, March 3, ch. 90, 38 Stat. 956..... 304
1915, March 4, ch. 153, § 20, 38 Stat. 1185 178
1916, May 18, ch. 125, 39 Stat. 124..... 101
1917, March 2, ch. 146, 39 Stat. 969..... 509
1917, March 3, ch. 163, § 1, 39 Stat. 1119 356
1917, May 18, ch. 15, 40 Stat. 76..... 103
1917, June 12, ch. 27, § 1, 40 Stat. 157... 356

REVISED STATUTES.

§ 566 359
§§ 649, 700..... 564
§ 882 103
§ 914 543
§§ 1000, 1007..... 281
§ 1011 564
§ 1025 20
§ 2139 227
§ 2139. Amended by Act 1877, Feb. 27, ch. 69, 19 Stat. 244; Act 1892, July 23, ch. 234, 27 Stat. 260..... 101
§ 2140 509
§§ 2325, 2326..... 133
§ 3213 588
§ 3225 87
§§ 4067–4070 535
§ 4894 264
§ 5275 281

COMPILED STATUTES 1916.

§ 1032 464
§§ 1245, 1245a, b, d..... 521
§ 1251b 304
§ 1494 103
§ 1537 543
§ 1583 359
§ 1587 564
§§ 1660, 1666..... 281
§ 1668, 1672..... 564
§ 1691 20
§ 4136a 101, 227
§ 4137 227
§ 4141 509
§ 4144a 101
§ 4379 428
§ 4537 488
§§ 4622, 4623..... 133
§§ 4702, 4724..... 488
§ 5937 588
§ 5948 87
§§ 6287g–6287q 344
§ 6923 330
§§ 7615–7618 535
§ 8337a 178
§ 8563 574
§§ 8604a, 8604aa..... 311
§§ 8605–8615, 8622..... 560
§§ 8651–8654 23
§§ 8657–8665 .....161, 288
§ 8677 422
§ 8678 .....422, 556
§§ 8679, 8680..... 422
§§ 8717–8728 596
§ 9438 264
§ 9585 .....149, 186, 543
§ 9587 543

Digitized by Google

§ 9589 186
§ 9598 223
§ 9603 149
§ 9605 426
§ 9607 213
§§ 9608, 9609 221
§ 9623 426
§ 9631 ..... 426, 439
§ 9633 426
§ 9640 149
§ 9641 ..... 149, 413
§ 9643 149
§ 9644 ..... 97, 213, 505, 580
§ 9647 149
§ 9648 543
§ 9654 ..... 213, 413
§ 10121 281
§ 10201 497
§ 10295 428
§ 10305 521
§ 10311 535
§ 10381 336
§ 10385 ..... 497, 596
§§ 10408, 10506 339

TREATIES.

With Chippewa Indians, Feb. 22, 1855, 10 Stat. 1165 101

ALABAMA.

CODE 1907.

§ 3353 108

HAWAII.

LAWS.

1903, Act 51, § 1 155

ILLINOIS.

HURD'S REVISED STATUTES 1915-16.

Ch. 32, § 19 213

KENTUCKY.

STATUTES 1915.

§ 4679c 359
§ 4679c, subsecs. 1, 4-6 359

LAWS.

1898, ch. 49 359
1898, ch. 49, §§ 1, 4-6 359

LOUISIANA.

CONSTITUTION.

Art. 290 577

REVISED CIVIL CODE.

Arts. 455, 457 577

MISSISSIPPI.

CODE 1906.

§§ 4780, 4783 615

NEW JERSEY.

COMPILED STATUTES 1910.

Volume 3.

Page 3167, § 10 166

NEW YORK.

CODE OF CIVIL PROCEDURE.

§ 501 7

OKLAHOMA.

REVISED LAWS 1910.

§§ 3339-3341 352

PENNSYLVANIA.

LAWS.

1849, p. 533 532
1859, p. 425 532

PORTO RICO.

REVISED STATUTES & CODES.

§ 4578 76

TEXAS.

CONSTITUTION.

Art. 16, § 37 439

REVISED STATUTES 1911.

Arts. 5622-5627 439

WEST VIRGINIA.

LAWS.

1915, ch. 9. Amended by Laws 1915 (Ex. Sess.) ch. 1 17
1915 (Ex. Sess.) ch. 1 17

STAY.

See Appeal and Error, ⚷492.

STEVEDORES.

See Evidence, ⚷75; Shipping, ⚷84.

STIPULATIONS.

⚷14(1) (U.S.C.C.A. Porto Rico) Stipulation relating to defendants' refusal to pay increased rental demanded by United States *held* not to show that right of United States was denied, or that right to make any increase whatsoever was contested.—Porto Rico Ry., Light & Power Co. v. United States, 76.

STOCK.

See Corporations, ⚷89, 123; Joint-Stock Companies, ⚷8; Limitation of Actions, ⚷66.

STOCKHOLDERS.

See Corporations, ⚷209-268, 556; Joint-Stock Companies, ⚷10, 18.

Digitized by Google

STREET RAILROADS.

See Carriers, ⟹318; Landlord and Tenant, ⟹167; Venue, ⟹8.

I. ESTABLISHMENT, CONSTRUCTION, AND MAINTENANCE.

⟹55 (U.S.C.C.A.Tex.) Obligation of a street railroad company to pave between its tracks, when required by the city, assumed in its franchise ordinance, *held* enforceable by the city by intervention in a foreclosure suit by a mortgagee.—Faller v. Boisot, 229.

SUBSCRIPTIONS.

See Corporations, ⟹89, 228, 268.

SUMMONS.

See Process.

SUPERSEDEAS.

See Appeal and Error, ⟹485, 492; Bankruptcy, ⟹76.

SURPLUS.

See Mortgages, ⟹567.

SWIMMING POOL.

See Landlord and Tenant, ⟹167.

TACKING POSSESSION.

See Adverse Possession, ⟹43.

TAXATION.

See Internal Revenue; Statutes, ⟹245.

TELEGRAPHS AND TELEPHONES.

See Constitutional Law, ⟹42; Electricity, ⟹19; Eminent Domain, ⟹47-232, 321; Jury, ⟹19; Master and Servant, ⟹13, 289; Statutes, ⟹112.

I. ESTABLISHMENT, CONSTRUCTION, AND MAINTENANCE.

⟹11 (U.S.C.C.A.Ill.) Contract between a railroad and telegraph company for joint maintenance of telegraph lines on right of way and exchange of services *held* valid.—Chicago Great Western R. Co. v. Postal Telegraph-Cable Company, 574.

TERM.

See Exceptions, Bill of, ⟹41, 43.

TERRITORIES.

See States, ⟹9.

⟹11 (U.S.C.C.A.Okl.) Before territories are admitted to statehood, Congress exercises as to them combined powers of the national and state governments.—Oklahoma, K. & M. I. Ry. Co. v. Bowling, 518.

TIME.

See Bankruptcy, ⟹410; Criminal Law, ⟹631; Exceptions, Bill of, ⟹41, 43.

TITLE.

See Adverse Possession; Banks and Banking, ⟹127, 159, 166; Carriers, ⟹56; Pledges, ⟹25; Sales, ⟹201; Statutes, ⟹112; Trespass, ⟹20; Vendor and Purchaser, ⟹138, 351.

TORTS.

See Collision; Death; Fraud; Trespass.

TOWAGE.

⟹9 (U.S.C.C.A.Va.) The unaccepted offer of towing services by tugs to a barge before she was ready to begin her voyage *held* not to give the tugs a maritime lien for damages.—Clinton v. Smith & Terry, 171.

⟹15(2) (U.S.C.C.A.N.Y.) That tugs in moving in the daytime a vessel having at the time no motive power of her own, in harbor waters and in good weather, run her aground, warrants an inference of negligence on their part.—The Mason, 628.

Evidence considered as to injury caused to a tow by stranding.—Id.

TRADE-MARKS AND TRADE-NAMES.

I. MARKS AND NAMES SUBJECTS OF OWNERSHIP.

⟹3(4) (U.S.C.C.A.Cal.) The words "Arch Builder" and "Heel Leveler," used in connection with insoles for shoes, are susceptible of exclusive appropriation as trade-marks, since they are used in a secondary sense.—Wonder Mfg. Co. v. Block, 658.

IV. INFRINGEMENT AND UNFAIR COMPETITION.

(A) What Constitutes Infringement.

⟹59(1) (U.S.C.C.A.Cal.) Where plaintiffs had trade-mark in word "Wizard," defendant's sale of goods identical in appearance under name "Wonder" was infringement.—Wonder Mfg. Co. v. Block, 658.

⟹59(1) (U.S.C.C.A.Ill.) Though complainant registered trade-mark "Junior" for pencil sharpener, it was no infringement of same for defendant, who previously sold pencil sharpeners under the name "Stewart," to offer to the trade smaller pencil sharpeners under name of "Stewart Junior."—Automatic Pencil Sharpener Co. v. Stewart Mfg. Co., 112.

V. TRADE-MARKS AND TRADE-NAMES ADJUDICATED.

"Arch Builder."—Wonder Mfg. Co. v. Block 658
"Heel Leveler."—Wonder Mfg. Co. v. Block 658
"Junior."—Automatic Pencil Sharpener Co. v. Stewart Mfg. Co. 112
"Stewart,"—Automatic Pencil Sharpener Co. v. Stewart Mfg. Co. 112
"Stewart Junior."—Automatic Pencil Sharpener Co. v. Stewart Mfg. Co. 112
"Wizard."—Wonder Mfg. Co. v. Block 658
"Wonder."—Wonder Mfg. Co. v. Block 658

Digitized by Google

TRANSFER OF CAUSES.

See Trial, ⚷11.

TRANSITORY ACTIONS.

See Venue, ⚷8.

TRESPASS.

II. ACTIONS.

(A) Right of Action and Defenses.

⚷20(3) (U.S.C.C.A.S.C.) In action for cutting and removal of timber from land of which plaintiff is legal owner, plaintiff may prove title prima facie by showing exclusive possession not obtained by disseisin of defendant.—Williamson & Brown Land & Lumber Co. v. Mullins Lumber Co., 448.

TRIAL.

See Costs; Criminal Law, ⚷631-829; Jury; New Trial; Stipulations; Venue.

For trial of particular actions or proceedings, see also the various specific topics.

For review of rulings at trial, see Appeal and Error.

I. NOTICE OF TRIAL AND PRELIMINARY PROCEEDINGS.

⚷4 (U.S.C.C.A.Mo.) Where equitable defense is interposed in action at law, it will have to be disposed of by court sitting as a chancellor before trial of action at law to jury.—Fay v. Hill, 389.

II. DOCKETS, LISTS, AND CALENDARS.

⚷11(3) (U.S.C.C.A.Mo.) Under equity rule 22 (198 Fed. xxiv, 115 C. C. A. xxiv) the fact that there is a remedy at law is no ground for demurrer or motion to dismiss a bill, but the proper procedure is to move to transfer it to the law side.—Fay v. Hill, 389.

Failure to move to transfer a bill to the law side, on the ground that there is a complete and adequate remedy at law, and proceeding to a hearing, is a waiver of the objection. —Id.

V. ARGUMENTS AND CONDUCT OF COUNSEL.

⚷120(3) (U.S.C.C.A.N.Y.) Conduct of counsel, in referring repeatedly to a matter excluded from the evidence by the court, and which was irrelevant, criticized.—Third Ave. Ry. Co. v. Mills, 571.

VI. TAKING CASE OR QUESTION FROM JURY.

(A) Questions of Law or of Fact in General.

⚷143 (U.S.C.C.A.Miss.) Where evidence is conflicting, issues should be submitted to jury.—Alabama Great Southern R. Co. v. Morris & Co., 320.

⚷146 (U.S.C.C.A.N.Y.) Where defendant totally abandoned answer served, and relied on entirely different defense orally stated at trial, court would have been justified in withdrawing juror and compelling an amendment, in order that defendant might plead according to statement orally made and in manner technically justifying proof offered.—Cowen Co. v. Houck Mfg. Co., 293.

VII. INSTRUCTIONS TO JURY.

(B) Necessity and Subject-Matter.

⚷217 (U.S.C.C.A.Pa.) Where court, in connection with charge cautioning jury to stick to real issue in case, used phrase "to draw a red herring across the trail," but there was nothing to show that phrase was directed against defendant, any more than plaintiff, defendant cannot complain of use of such phrase.—Campbell v. Krauss, 580.

(C) Form, Requisites, and Sufficiency.

⚷238 (U.S.C.C.A.Canal Zone) Where, in personal injury action, court, in submitting defense of assumption of risk, severely criticized that doctrine, and jury, for injury to employé's arm similar to sprained ankle, awarded $7,500 damages, act of court, in improperly accompanying instruction with criticism calculated to prevent jury from applying doctrine, was harmful, and necessitates reversal.—Bergen Point Iron Works v. Shaw, 424.

(E) Requests or Prayers.

⚷258(1) (U.S.C.C.A.Ohio) Where, in action on contract, defendant relied on practical construction by parties, as well as new and independent agreement, refusal of instruction submitting both theories of defense, but which court treated as dealing solely with practical construction, on which issue he had already charged jury, cannot be deemed error, where its double aspect was not appropriately called to court's attention.—Ulman v. Manheimer, 601.

(G) Construction and Operation.

⚷296(3) (U.S.C.C.A.N.Y.) An instruction, in an action against a street railroad company for injury to a passenger, requiring exercise of highest degree of care, considered with other instruction, *held* not reversible error.—Third Ave. Ry. Co. v. Mills, 571.

X. TRIAL BY COURT.

(B) Findings of Fact and Conclusions of Law.

⚷393(1) (U.S.C.C.A.Colo.) Where, in an action tried to the court, an opinion stating certain facts was filed, the facts recited cannot be treated as special findings.—City of Goldfield, Colo., v. Roger, 99.

TRUST DEEDS.

See Mortgages.

TRUST FUND.

See Corporations, ⚷228.

Digitized by Google

TRUSTS.

See Abatement and Revival, ⚷14; Evidence, ⚷271; Executors and Administrators, ⚷47; Judgment, ⚷590; Wills, ⚷681, 787.

VI. ACCOUNTING AND COMPENSATION OF TRUSTEE.

⚷291 (U.S.C.C.A.Pa.) Trustee who commingled trust funds with his own cannot, by making bequests to beneficiaries stated to be in lieu of rights under trust, defeat rights of beneficiaries who rejected bequests, to compel accounting.—Alexander v. Fidelity Trust Co., Co., 61.

⚷305 (U.S.C.C.A.Pa.) Failure of beneficiaries to enforce accounting by trustee, who recognized existence of trust until his death, *held* not, though trust continued for many years, to amount to laches precluding proceedings against trustee's executor.—Alexander v. Fidelity Trust Co., 61.

Eighteen years' delay by complainants in suing defendant, executor of their father's estate, to compel accounting in trust of which the father was trustee, *held* not to amount to laches, complainants by other proceedings and demands having advised defendant of their claim.—Id.

Where trustee, without knowledge or consent of beneficiaries, commingled trust funds with his own, but up to time of his death recognized validity of trust, and his liability to account, his executor cannot defeat suit by beneficiaries to compel accounting, no rights of third persons having intervened.—Id.

Where trustee commingled trust funds with his own, and entered credits to cestui on his books, presumption is that trustee intended joint fund to be chargeable, and casts on trustee or his personal representative burden to show clearly what part of property belongs to his estate.—Id.

That testator, who was trustee of trust created for son, made bequests to son, which will stated were to be accepted in lieu of right of accounting, will not preclude son from enforcing accounting by testator's executor, where son attacked validity of will, and refused to accept any benefit thereunder.—Id.

In suit against executor of trustee to compel accounting for trust property which trustee commingled with own property, where there was nothing to show that one beneficiary had been paid, it appearing that trustee recognized existence of trust up to time of his death, claim of such beneficiary must prevail.—Id.

TUGS.

See Towage.

TWELVE HOUR LAW.

See Master and Servant, ⚷13.

TWENTY EIGHT HOUR LAW.

See Carriers, ⚷37.

ULTRA VIRES.

See Corporations, ⚷487.

UNITED STATES.

See Post Office; Public Lands; Territories.

II. PROPERTY, CONTRACTS, AND LIABILITIES.

⚷67(1) (U.S.C.C.A.Iowa) Bond required by Act Feb. 24, 1905, of contractors performing work for United States being intended not only to secure government, but to protect third persons who may furnish labor or materials, an agreement between contractor and subcontractor, freeing former from liability to laborers employed by or to those furnishing materials to the latter, is unavailing against the claims of such persons.—Bartlett & Kling v. Dings, 330.

A government contractor required to give bond under Act Feb. 24, 1905, cannot escape liability to laborers employed by a subcontractor by posting notices that it would not be responsible to employés of the subcontractor.—Id.

⚷67(2) (U.S.C.C.A.Iowa) Interest on sums due laborers employed by a subcontractor on government work is properly allowed from the date the assignee of such claims intervened in the proceedings by other creditors against the contractor and the surety on its bond, required by Act Feb. 24, 1905.—Bartlett & Kling v. Dings, 330.

⚷67(3) (U.S.C.C.A.Iowa) The one-year limitation against actions on bonds required by Act Feb. 24, 1905, of contractors performing work for the United States, begins to run from the time of settlement by the government with the contractors.—Bartlett & Kling v. Dings, 330.

The claims of laborers who performed services for a subcontractor on government work are assignable, and the assignee may recover therefor on the contractor's bond.—Id.

VALUE.

See Eminent Domain, ⚷138; Work and Labor, ⚷30.

VARIANCE.

See Indictment and Information, ⚷166.

VENDOR AND PURCHASER.

See Action, ⚷53; Appeal and Error, ⚷269, 719; Bankruptcy, ⚷262; Cancellation of Instruments, ⚷32; Equity, ⚷65; Frauds, Statute of, ⚷119; Mortgages, ⚷534; Sales; Specific Performance, ⚷126.

II. CONSTRUCTION AND OPERATION OF CONTRACT.

⚷70 (U.S.C.C.A.S.C.) Contract giving option to purchase land construed as to price payable thereunder.—Rogers v. Hinckle, 474.

IV. PERFORMANCE OF CONTRACT.

(A) Title and Estate of Vendor.

⚷138 (U.S.C.C.A.Mich.) Though purchaser relied on its own title examination when it contracted, and there was no fraud or misleading by vendor, yet action for damages on account of vendor's inability to convey title as agreed cannot be defeated, unless purchaser knew of defect when it contracted.—Crocker v. Ingersoll Engineering & Constructing Co., 91.

Digitized by Google

VII. REMEDIES OF PURCHASER.

(B) Actions for Breach of Contract.

⚷351(10) (U.S.C.C.A.Mich.) Where a vendor's title proved defective, the purchaser, who had been admitted into possession, should not be allowed to recover interest on purchase-money payments, without being charged with the rental value of the premises while it had possession.—Crocker v. Ingersoll Engineering & Constructing Co., 91.

VENUE.

I. NATURE OR SUBJECT OF ACTION.

⚷8 (U.S.C.C.A.Canal Zone) Action for damages for injuries to automobile, occasioned by collision with electric car, is transitory, and, though it arose in Panama, district court of Canal Zone has jurisdiction, regardless of residence of parties.—Panama Electric Ry. Co. v. Moyers, 79.

VIEW.

See Eminent Domain, ⚷232.

WAIVER.

See Appeal and Error, ⚷1079; Bankruptcy, ⚷76, 84.

WAR.

See Army and Navy; Conspiracy, ⚷43; Constitutional Law, ⚷252.

⚷4 (U.S.C.C.A.Cal.) Alien Enemy Act, authorizing restraint and the removal of alien enemies, is not invalid.—De Lacey v. United States, 535.

WARDS.

See Guardian and Ward.

WATERS AND WATER COURSES.

See Navigable Waters.

WILLS.

See Executors and Administrators.

VI. CONSTRUCTION.

(H) Estates in Trust and Powers.

⚷681(2) (U.S.C.C.A.W.Va.) Trustees under a will *held* vested with legal title, which would support ejectment.—McCormick v. Provident Life & Trust Co. of Philadelphia, 193.

VII. RIGHTS AND LIABILITIES OF DEVISEES AND LEGATEES.

(D) Election.

⚷787 (U.S.C.C.A.Pa.) Where beneficiary under will of one who was trustee elected to take bequest, which will stated should be in full payment of any demands for which testator was liable as trustee, such election is binding on beneficiary, and she cannot compel testator's executor to account for trust property in his hands.—Alexander v. Fidelity Trust Co., 61.

(H) Void, Lapsed, and Forfeited Devises and Bequests, and Property and Interests Undisposed of.

⚷860 (U.S.C.C.A.W.Va.) Legatees under will *held* not to have taken title by devolution to stock owned by testator, which entitled them to maintain suit as stockholders against corporation and others.—Whitaker v. Whitaker Iron Co., 457.

WITHDRAWAL.

See Criminal Law, ⚷274, 1149; Public Lands, ⚷102; Trial, ⚷146.

WITNESSES.

See Appeal and Error, ⚷994; Criminal Law, ⚷742; Evidence; Perjury.

III. EXAMINATION.

(B) Cross-Examination and Re-Examination.

⚷269(2) (U.S.C.C.A.Mass.) Where witness for prosecution gave no testimony on direct examination upon subject of his knowledge regarding grand jury proceedings, exclusion of cross-examination as to his knowledge whether property generally described in indictment was produced before grand jury was proper, despite defendant's contention that there was a variance between description in indictment and grand jury's knowledge.—Feener v. United States, 399.

Where defendants contended there was a variance between the description in indictment of certain property and the grand jury's knowledge, cross-examination of a witness for prosecution for purpose of discovering witnesses who knew what testimony grand jury had before them is properly excluded, where matter was in no way raised on direct examination. —Id.

WORDS AND PHRASES.

"Accruing."—Skinner v. Union Pac. Coal Co. (Colo.) 204.
"Arising."—Skinner v. Union Pac. Coal Co. (Colo.) 204.
"Automobile."—Shawnee Nat. Bank v. United States (Okl.) 509.
"Bankrupt."—Horner v. Hamner (Va.) 186.
"Casual employment."—Western Union Telegraph Co. v. Hickman (Va.) 17.
"Common carrier."—Taylor v. Wells Fargo & Co. (Miss.) 161.
"Common carrier by railroad."—Taylor v. Wells Fargo & Co. (Miss.) 161.
"Consent."—Seegmiller v. Day (Ill.) 213.
"Creditor."—In re Veler (Ohio) 543.
"Elastic."—Diamond Patent Co. v. Webster Bros. (Cal.) 207.
"Equivalent."—Wilson & Willard Mfg. Co. v. Union Tool Co. (Cal.) 639.
"Exchange."—Chicago Great Western R. Co. v. Postal Telegraph-Cable Co. (Ill.) 574.
"False."—United States v. Nashville, C. & St. L. Ry. (Tenn.) 588.
"Income."—Skinner v. Union Pac. Coal Co. (Colo.) 204; Rensselaer & S. R. Co. v. Irwin (N. Y.) 636.
"Interstate commerce."—Chicago & A. R. Co. v. Allen (Ill.) 288.

Digitized by Google

"Invention."—Turner v. Lauter Piano Co. (N. J.) 48.
"Issue."—Cowen Co. v. Houck Mfg. Co. (N. Y.) 293.
"Joint-stock companies."—Haiku Sugar Co. v. Johnstone (Hawaii) 155.
"Junior."—Automatic Pencil Sharpener Co. v. Stewart Mfg. Co. (Ill.) 112.
"Novation."—Rensselaer & S. R. Co. v. Irwin (N. Y.) 636.
"Partnership."—Haiku Sugar Co. v. Johnstone (Hawaii) 155.
"Permitted."—United States v. Denver & R. G. R. Co. (Colo.) 422.
"Plastic."—Diamond Patent Co. v. Webster Bros. (Cal.) 207.
"Principal."—Billingsley v. United States (Wash.) 339.
"Private carrier."—The C. R. Sheffer (N. Y.) 526.
"Railroad purpose."—Louisville & N. R. Co. v. Western Union Telegraph Co. (Ky.) 359.
"Received."—Skinner v. Union Pac. Coal Co. (Colo.) 204.
"Reinforcement of concrete."—Turner v. Lauter Piano Co. (N. J.) 48.
"Secured creditor."—Morrison v. Rieman (Ill.) 149.
"Use of mails to defraud."—Edwards v. United States (Ohio) 596.
"Wagons."—Shawnee Nat. Bank v. United States (Okl.) 509.

WORK AND LABOR.

⚷30(2) (U.S.C.C.A.Iowa) In an action for the reasonable value of labor and materials bestowed upon certain metal patterns at the request of defendant, evidence as to the hours of labor necessary and the value of materials furnished *held* to raise a question for the jury.—Hart-Parr Co. v. Barth Mfg. Co., 539.

WORKMEN'S COMPENSATION ACTS.

See Master and Servant, ⚷362.

WRITS.

See Injunction; Mandamus; Process.
Of error, see Appeal and Error.

WRONGFUL DEATH.

See Death.

WEST PUBLISHING CO., PRINTERS, ST. PAUL, MINN.

Digitized by Google

Digitized by Google

Digitized by Google

Digitized by Google

Digitized by Google

Digitized by Google

Digitized by Google